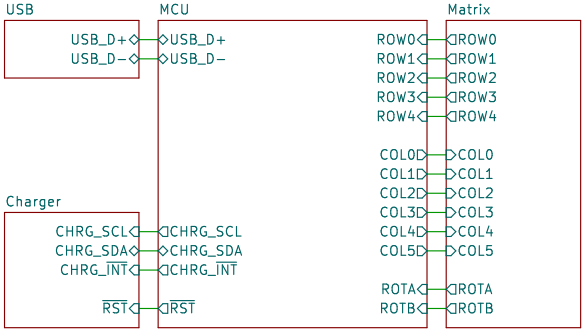

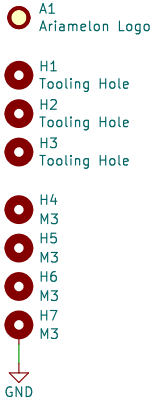

Licensed under CC BY 4.0.
All capacitors 50V unless otherwise specified.
Follows the VIK standard by Sadek Baroudi (https://github.com/sadekbaroudi/VIK)
Created by Ariamelon (https://github.com/Ariamelon/Cantaloupe/)

Sheet: /
File: Cantaloupe.kicad_sch

Title: Cantaloupe split ergonomic keyboard

Size: A5	Date: 2023-08-11	**Rev: V3.0**
KiCad E.D.A. kicad 7.0.6		Id: 1/5

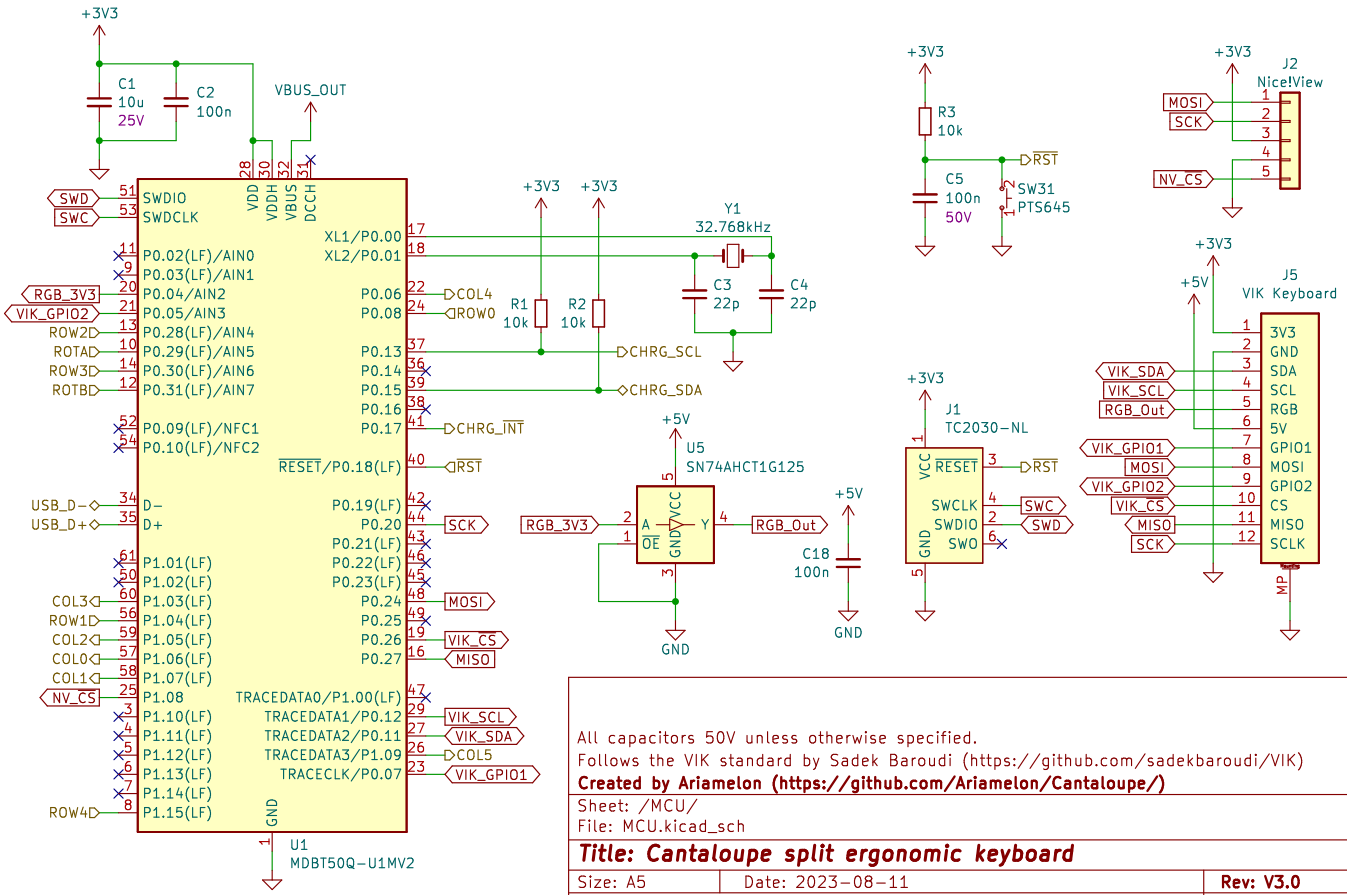

All capacitors 50V unless otherwise specified.
Follows the VIK standard by Sadek Baroudi (https://github.com/sadekbaroudi/VIK)
Created by Ariamelon (https://github.com/Ariamelon/Cantaloupe/)

Sheet: /MCU/
File: MCU.kicad_sch

Title: Cantaloupe split ergonomic keyboard

Size: A5	Date: 2023-08-11	**Rev: V3.0**
KiCad E.D.A. kicad 7.0.6		Id: 2/5

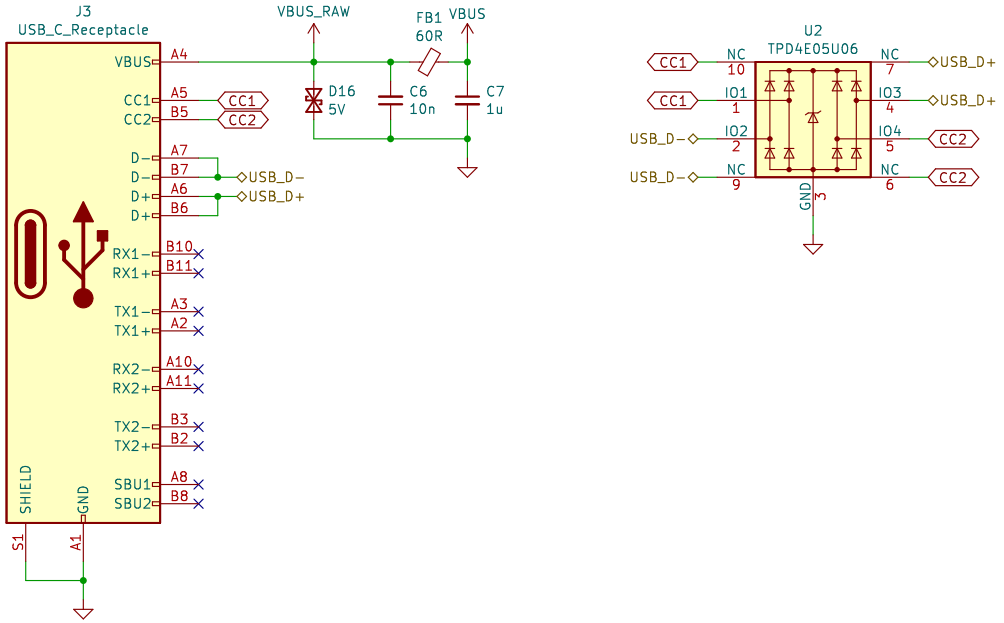

All capacitors 50V unless otherwise specified.
Follows the VIK standard by Sadek Baroudi (https://github.com/sadekbaroudi/VIK)
Created by Ariamelon (https://github.com/Ariamelon/Cantaloupe/)

Sheet: /USB/
File: USB.kicad_sch

Title: Cantaloupe split ergonomic keyboard

Size: A5	Date: 2023-08-11	**Rev: V3.0**
KiCad E.D.A. kicad 7.0.6		Id: 3/5

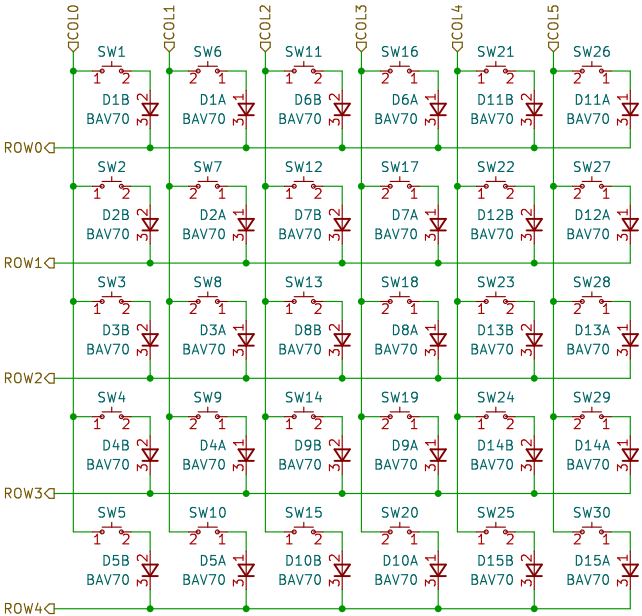

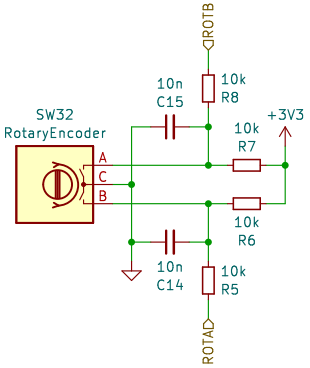

All capacitors 50V unless otherwise specified.
Follows the VIK standard by Sadek Baroudi (https://github.com/sadekbaroudi/VIK)
Created by Ariamelon (https://github.com/Ariamelon/Cantaloupe/)

Sheet: /Matrix/
File: Matrix.kicad_sch

Title: Cantaloupe split ergonomic keyboard

Size: A5	Date: 2023-08-11	**Rev: V3.0**
KiCad E.D.A. kicad 7.0.6		Id: 4/5

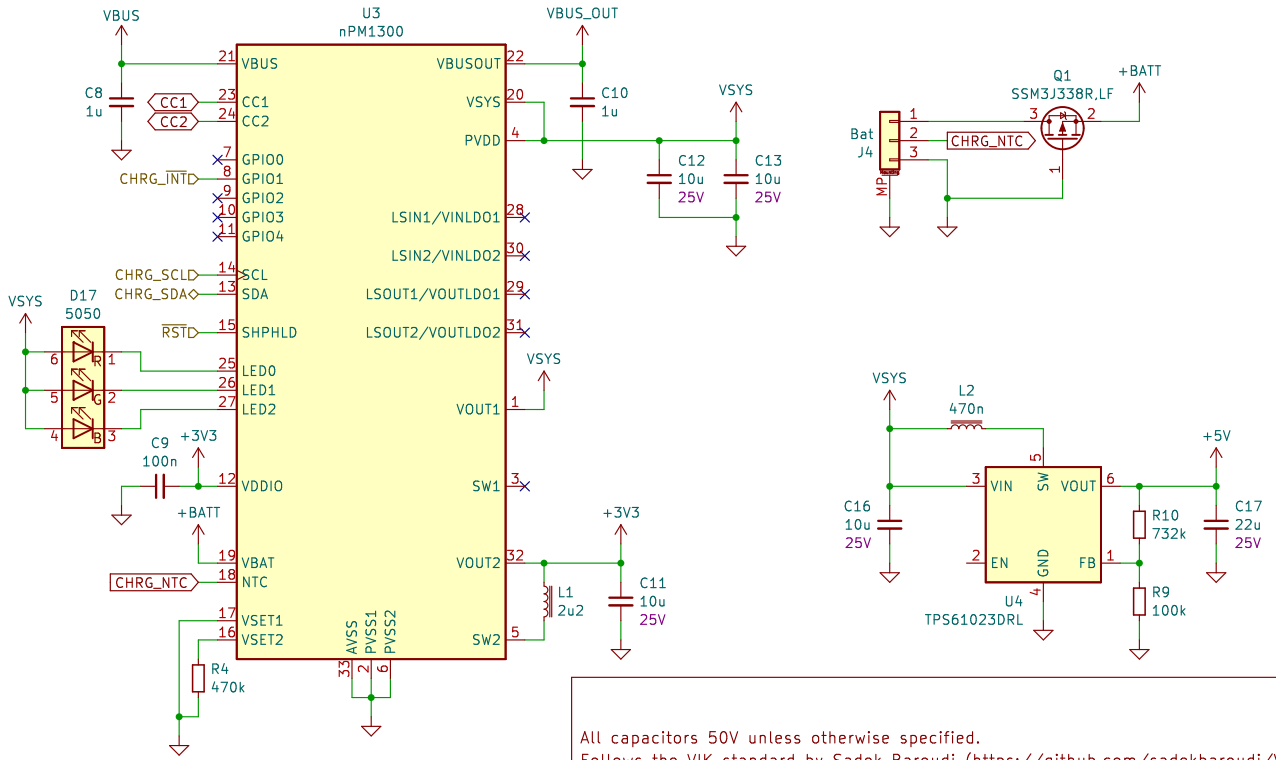

All capacitors 50V unless otherwise specified.
Follows the VIK standard by Sadek Baroudi (https://github.com/sadekbaroudi/VIK)
Created by Ariamelon (https://github.com/Ariamelon/Cantaloupe/)

Sheet: /Charger/
File: Charger.kicad_sch

Title: Cantaloupe split ergonomic keyboard

Size: A5	Date: 2023-08-11	**Rev: V3.0**
KiCad E.D.A. kicad 7.0.6		Id: 5/5