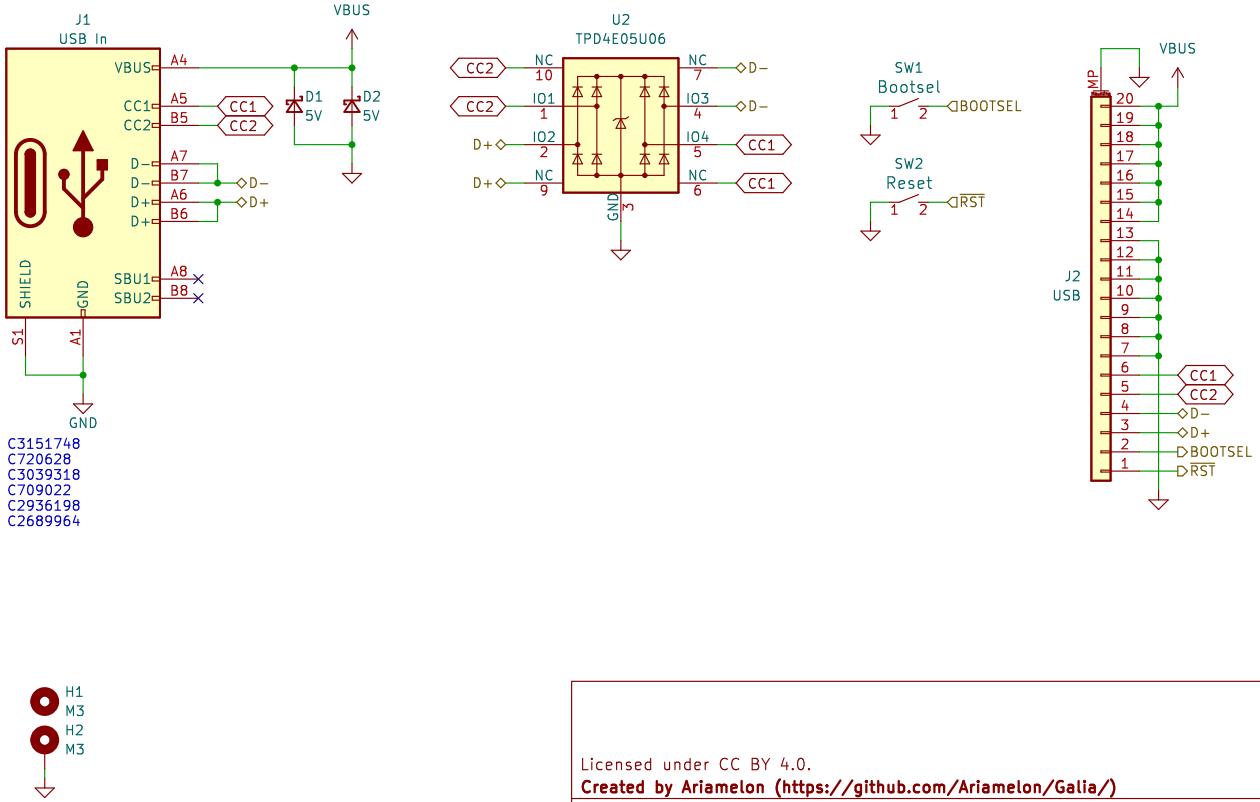

Licensed under CC BY 4.0.

Created by Ariamelon (https://github.com/Ariamelon/Galia/)

Sheet: /

File: Galia.kicad_sch

Title: Galia USB-C breakout board

Size: A5	Date: 2023-07-14	**Rev: V1.0**
KiCad E.D.A. kicad 7.0.6		Id: 1/1