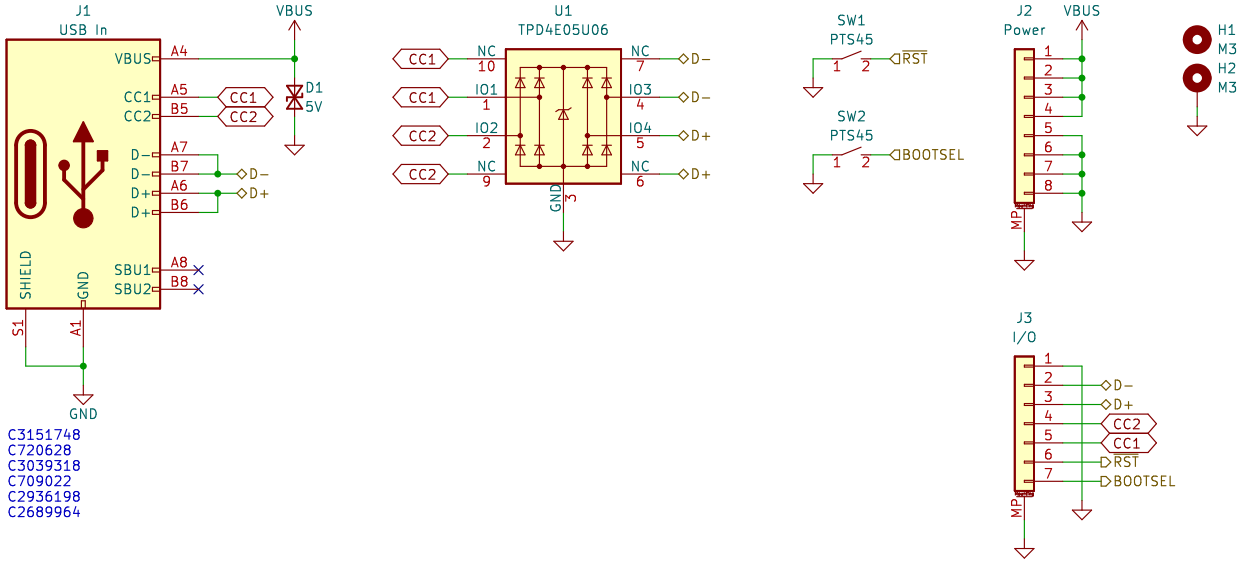

C3151748
C720628
C3039318
C709022
C2936198
C2689964

Licensed under CC BY 4.0.

Created by Ariamelon (https://github.com/Ariamelon/Galia/)

Sheet: /
File: Galia.kicad_sch

Title: Galia USB−C breakout board

Size: A5	Date: 2023−07−21	**Rev: V1.0**
KiCad E.D.A. kicad 7.0.6		Id: 1/1