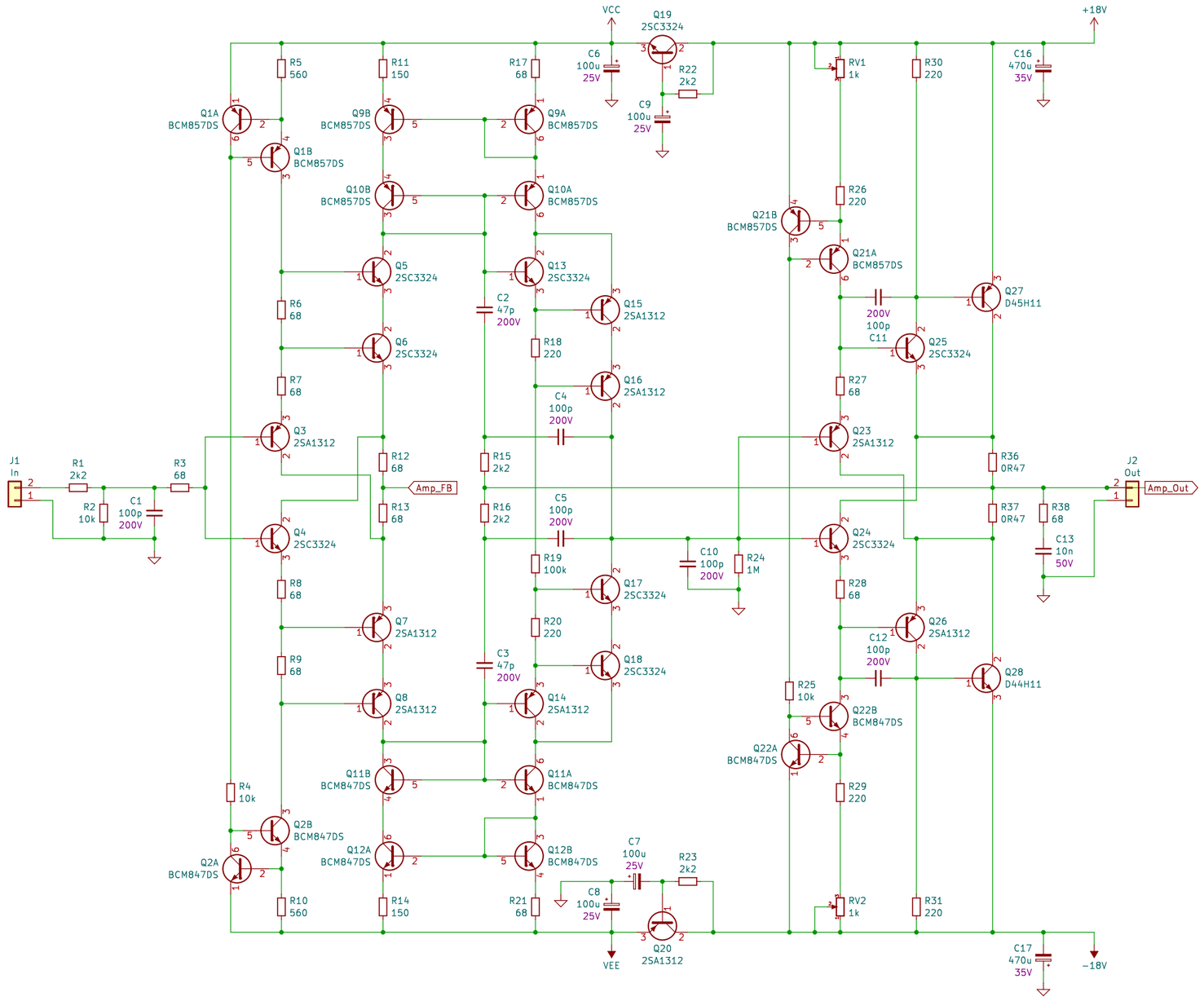

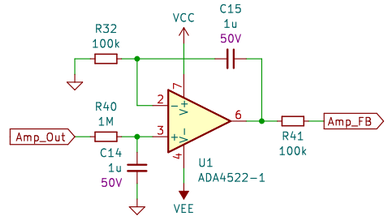

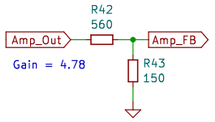

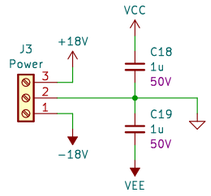

Licensed under CC BY 4.0.

Created by Ariamelon (https://github.com/Ariamelon/Mirza/)

Sheet: /

File: Mirza.kicad_sch

Title: Mirza Current-Feedback Amplifier Module

Size: A3	Date: 2023-09-28	**Rev: V1.0**
KiCad E.D.A. kicad 7.0.7		Id: 1/1