ADRIOS ClearSpace-1: In orbit demonstration of the removal of a non-cooperative spacecraft

Dr. Svenja Woicke [(1)], Jimmy Jipp [(1)], Dr. Christian Steimle [(2)], Nils Pokrupa[(3)], Lionel Metrailler[(4)]

[(1)] OHB System, Universitätsallee 27-29, 28359 Bremen, Germany , Email: svenja.woicke@ohb.de/ jimmy.jipp@ohb.de
[(2)] European Space Agency, Keplerlaan 1, 2201 AZ Noordwijk, The Netherlands, Email: christian.steimle@esa.int
[(3)] OHB Sweden AB, P.O. Box 1269, SE-164 29 Kista, Sweden, Email: nils.pokrupa@ohb-sweden.se
[(4)] ClearSpace SA, Rue de Lausanne 64, 1020 Renens, Switzerland, lionel.metrailler@clearspace.today

ABSTRACT

Within ESA's Active Debris Removal In-Orbit Servicing (ADRIOS) Cornerstone of the Space Safety Program the ClearSpace-1 mission is developed to demonstrate the in-orbit rendezvous and capture of a non-cooperative client spacecraft, with subsequent removal from its orbit. With this objective, the mission will demonstrate the ability to remove space objects from orbit, even if the space object is unprepared and non-cooperative.

The technology developed in ADRIOS ClearSpace-1 will, thus, actively contribute to reducing space debris in the future. However, it is not trivial to conduct the mission in a way to fit the demanding envelope with the need for a low-cost mission supporting the viability of business models of active debris removal in the future while ensuring safety and compliance to space debris mitigation requirements.

1 Introduction

Space Debris is posing an ever-increasing threat for all satellites in orbit. The risk of a collision is growing with every satellite launched. To secure operations in space for the future, it is necessary to remove larger space debris and some of the outdated satellites after their mission to reduce the risk of collision with other space objects. This challenge is taken on by the ADRIOS ClearSpace-1 mission.

ADRIOS ClearSpace-1 is the first European mission to demonstrate the in-orbit rendezvous, capture and removal of an existing, non-cooperative and unprepared, space object from low Earth orbit, and thus an important enabling step towards the capability of space debris removal. The space object selected to be removed is PROBA-1.

The ADRIOS ClearSpace-1 mission is currently developed by OHB System AG and ClearSpace SA on behalf of the European Space Agency, with the payload, including the Capture System and Guidance, Navigation and Control (GNC) for rendezvous and proximity operations, provided by ClearSpace SA and the platform provided by OHB Sweden based on their Innosat platform. The mission objective is to demonstrate the following key technologies:

- GNC system to approach into close proximity a space object, which is to be removed.
- Inspection and characterisation of the space object to prepare its safe capturing.
- Capability of the system to perform a collision avoidance manoeuvre against the space object.
- Capability to synchronise the motion of the servicer spacecraft with the space object to be removed.
- Safe capture of the uncooperative space object with the servicer spacecraft in synchronised motion

ADRIOS ClearSpace-1 is expected to be launched by end of 2028, demonstrating the rendezvous with and in-orbit capture of the space object followed by a joint de-orbiting of the ClearSpace-1 spacecraft with the captured space object. The total mission duration will be one year, followed by an uncontrolled de-orbit within 5 years after end of the mission.

In Section 2, we will give an overview of the mission. We will start by presenting the mission objectives (Sec 2.1), followed by a brief description of PROBA-1 (Sec 2.2). Next, the concept of operations is introduced (Sec 2.3). After this, the servicer spacecraft design is presented (Sec 2.4)

After this more general overview, we will address the specific challenges that were faced during the preliminary design of the mission in Section 3.

The paper closes with the conclusions in Section 4.

2 Mission overview

This section presents a general overview over the mission objectives, the client spacecraft, the concept of operations and the servicer's design. This paper focuses on the space segment of ADRIOS ClearSpace-1.

2.1 Mission objectives

ADRIOS ClearSpace-1 mission's objective is to contribute to ESA's Space Safety Program by demonstrating technologies for rendezvous, capture and

Proc. 9th European Conference on Space Debris, Bonn, Germany, 1–4 April 2025, published by the ESA Space Debris Office
Editors: S. Lemmens, T. Flohrer & F. Schmitz, (http://conference.sdo.esoc.esa.int, April 2025)

deorbit of a non-cooperative space object. These technologies will be enabling for Active Debris Removal to counter the effects of overpopulation of important orbits with decommissioned, non-operational and non-functional space objects.

The mission's key objectives are:

- Demonstrate the functionalities required to safely approach a space object in low Earth orbit into close proximity in an incremental manner.
- Determine the Client object's relative position by visual means.
- Demonstrate far-range relative navigation towards the Client object based on visual sensor information, demonstrate mid-range relative navigation to perform fly-arounds around the Client object and demonstrate close-range relative navigation, including pose estimation of the Client object and monitoring of the Servicer's relative state vector.
- Demonstrate motion synchronisation with the Client object before a capture attempt.
- Demonstrate the capability of the Servicer spacecraft to avoid collision with the space object to be removed by Collision Avoidance Manoeuvre.
- Demonstrate the safe capture of the tumbling Client object with the Servicer spacecraft in synchronised motion and without requiring cooperative interfaces on the Client side.
- Demonstrate the ability to relocate a space object by changing the stack orbital parameters.
- Ensure the Servicer / Client stack being in an orbit with a natural orbital decay duration of up to 5 years at the end of the mission.

ESA has selected PROBA-1 as the client object to be captured by ADRIOS ClearSpace-1

2.2 Client Object

PROBA-1, the first PROject for On Board Autonomy, is an ESA funded satellite mission with Verhaert Design and Development, Belgium, as the prime contractor. The PROBA-1 satellite is a microsatellite less than 1 m^3 in size and was launched into a low earth orbit on October 22nd 2001. The satellite is still functional as of 2024 even if it was designed for a 2-year nominal mission.

Figure 1 shows a rendering of the PROBA-1 satellite.

When launched in 2001, PROBA-1 was 94 kg and its dimensions were 60 x 60 x 80 cm. Currently, PROBA-1 is still operational, by that being ESA's longest ever operational satellite. While currently still operational, it is unclear in what condition PROBA-1 will be at the time of the encounter with ADRIOS ClearSpace-1 in 2029. Regardless of its condition in 2029, PROBA-1 will be deactivated before capture by ADRIOS ClearSpace-1.

One of the benefits of PROBA-1 is that the satellite is rather symmetric and does not feature any complex appendices. Its outside is covered by solar panels on five of six sides, which provides good reflectivity characteristics. The spacecraft does not feature any active propulsion system, so that there are no propellant residuals left on board.

PROBA-1's orbit at the time of the mission, is predicted by propagation of the current PROBA-1 orbit under the and, therefore, is not fully known today.

These orbital predictions are strongly affected by the solar activity in the next years before RDV, which is unknown. Therefore, a range of potential client orbits have been computed considering minimum and maximum solar activity.

Based on our current predictions the client orbital parameters will be in the ranges specified in Table 1 depending on the solar activity.

Table 1: PROBA-1 satellite.

	Min solar activity	Max solar activity
SMA	6900	6925
ECC	0.0049	0.0058
INC	98	98
RAAN	32	41
AOP	19	54

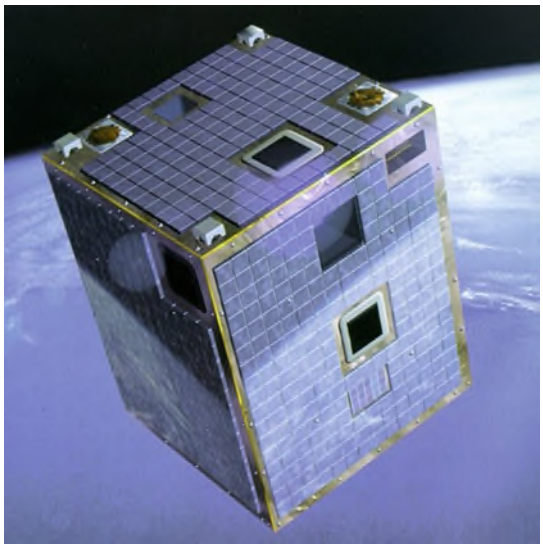

Figure 1: PROBA-1 satellite [ESA]

2.3 CONOPS

To satisfy the objectives presented in the pervious section, a concept of operations fulfilling each one of them has been developed (Figure 2).

The operations of ADRIOS ClearSpace-1 will start with the AIT campaign on ground. During this campaign tests will be conducted to ensure the correct functioning of the spacecraft. Test will be conducted both on the flight models but also on dedicated testbeds. Especially the capture system and the Rendezvous and Proximity Operations (RPO) GNC require an extensive testing campaign.

After successful AIT, the spacecraft will be transferred to the launch site. The expected launch vehicle is a European micro satellite launch vehicle. This selection is driven by the need to inject the ClearSpace-1 servicer spacecraft into a direct transfer trajectory towards PROBA-1 to avoid costly orbit phasing. With a spacecraft mass well below 1 metric ton, micro launchers are suitable to provide the launch in a cost-efficient manner.

The LEOP phase will be kept very short, with the spacecraft launched 'off'. After LEOP, Commissioning and Phasing are done in parallel to keep the mission duration as short as possible and to limit any additional drift before phasing, and by that limit any additional delta V needed. During LEOP, only the systems required during Phasing are commissioned. Obviously, some of the proximity sensors cannot be commissioned, yet, as they require closer proximity to the client to perform successful measurements.

During phasing and commissioning the ground contacts will be limited to the minimum necessary to download the relevant housekeeping data. After the successful phasing, the spacecraft will be 30 km behind PROBA-I. This point, called switch point, marks the transfer from operating the satellite in absolute navigation to operating a rendezvous mission, and, therefore, marks the start of the rendezvous/proximity phase. At this point the navigation switches from absolute navigation, as provided by the platform AOCS, to relative navigation, as provided by the payload GNC. Three types of relative navigation are employed: far-range, mid-range and close-range navigation. After the switch point has been reached and relative navigation with respect to the client is acquired, the spacecraft will be brought closer to the client during the first RDV phase: the closing phase. During this phase the distance to the client will be reduced from the initial 30 km to a few hundreds of meters, and the far-range navigation, an angles-only type of navigation, will be used. This navigation only requires a narrow-angle optical camera, but in the final part of the closing phase a ranging device will be used in addition to the visual information, switching the navigation to the mid-range.

During closing, ground contact will be more regular with multiple TM/TC passes per day.

After completing the closing phase, the spacecraft will start to orbit around the client, commencing the so-called fly-around phase, starting at a few hundreds of meters, gradually closing in, up to around 50-100 m. During this phase the client will be observed and characterised.

During fly around, the mid-range navigation will continue to use the narrow-angle camera measurements.

After successful completion of all measurements the proximity manoeuvring can start. During proximity

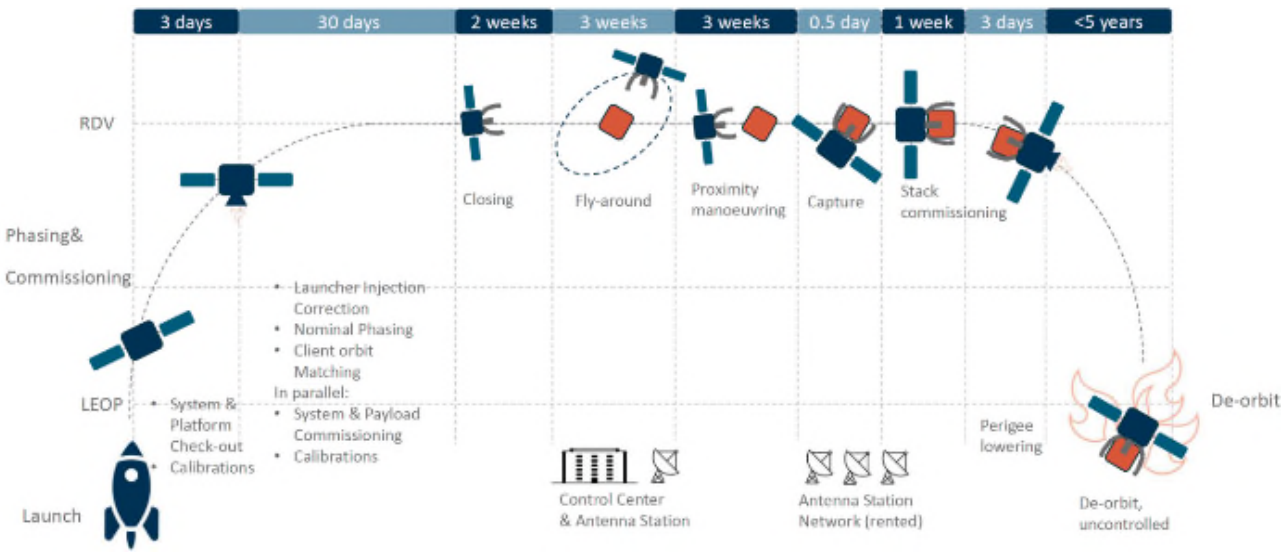

Figure 2: CONOPS of ADRIOS ClearSpace-1

manoeuvring a couple of transfers along waypoints are performed, however this does not immediately lead to a capture of the client spacecraft: these transfers are rehearsed in an incremental manner, always ensuring to return to a sufficiently safe spot (which also means that a return to the previous way point may not be sufficient).

To start the proximity manoeuvring, the spacecraft is transferred to the Formation Keeping Point (FKP), a point at about 150 m along track distance where the formation is maintained using the mid-range navigation (narrow-angle camera and ranging device). At FKP, the switch to close range navigation cannot yet be performed, therefore the spacecraft has to hop from FKP to the next waypoint, the Initial Proximity Point (IPP), at which it will be possible to initialize the close-range navigation using a wide-angle camera. After a GO from ground, the spacecraft will move from IPP to the Final Approach Point (FAP) using motion synchronization to account for the rotation of the client.

This entire sequence has to be done while the client is illuminated and during ground contact, as ground will need to supervise the approach and give the final go.

In case of any critical failure during this manoeuvre, a Collision Avoidance Manoeuvre (CAM) is performed, effectively breaking the formation flight. In case of a coordinated retreat, which will be executed in case of non-critical failures or during the planned rehearsals, the spacecraft will return to FKP, without breaking the formation.

Before the final capture, a full rehearsal of the entire sequence is performed, without performing the actual capture. After this rehearsal, the spacecraft returns to the FKP and performs the capture in the next proximity slot.

During these rehearsals it is also required to demonstrate the capability of the CAM to demonstrate that the manoeuvre is correctly computed and triggered without the thrusters being fired.

The mission is sized for one capture rehearsal and three capture attempts, with one CAM budgeted per capture attempt.

During the motion synchronization the spacecraft will reach a point such that the client will be contained inside the volume of the opened arms of the capture system. Once the proximity trigger is activated, the GNC switches off, and the capture system starts closing its phalanges. The capture system will then enclose the client without touching it, and then contact the client while continuing to close the arms. Finally, the client is secured within the arms to prevent its motion relative to the servicer.

Capture of PROBA-1 can be performed from two opposite directions; looking at two different faces of PROBA-1: the side with the launch adapter ring, and its opposite side. This allows for flexibility regarding illumination conditions.

The capture is performed fully autonomously, however during capture, selected images and all housekeeping data are downlinked via S-Band.

After a successful capture, the stack will detumble, followed by a characterization of the new configuration.

After these phases have been successfully carried out, ground will command the start of the deorbiting phase, during which the stack's orbit will be lowered to allow a de-orbit within less than 5 years.

After capture and before End-of-Life Rendezvous and Capture data and images collected during the capture will be downlinked via X band, which will require spacecraft pointing and ground contact.

As all mission objectives will have been achieved at this point and an uncontrolled re-entry is foreseen, the spacecraft will then be passivated by ground command, marking the end of the mission. The final de-orbit of the stack will happen within less than 5 years after end-of mission, which is compliant with ESA's space debris mitigation requirements[1].

2.4 Servicer Spacecraft

To fulfil the mission objectives following the operational concept described in the previous section, a servicer spacecraft has been designed that can provide the needs resulting from these.

The main engineering constraints in the design are:

- High power consumption during capture due to parallel operation of capture mechanisms and proximity sensors.
- Required client pointing for optical observations, which will constrain the orientation towards the sun.
- High delta-v demands for nominal manoeuvres and CAM provisions.
- Accommodation of large payload with the geometry of the capture system governing the size of the spacecraft.
- Design for uncontrolled re-entry, leading to a design with a strong focus on demise during re-entry.

To provide sufficient power to the payload during payload operations and during eclipse, sufficient power has to be produced and stored in the battery during illuminated phases. However, illuminated phases are not only used for power production but also for client observation and navigation measurements. Therefore, only a portion of the illuminated phases can be used solely for power generation at optimal sun angles, while part of the power has to be generated at suboptimal angles

during client pointing phases, where the attitude is optimized for the client observation rather than power generation.

Because of this, the spacecraft needs a comparably large solar array area, as the solar arrays cannot be optimally used at all times. However, since all the payload sensors need to point at the client while the client needs to be well illuminated (sun mainly from behind) the solar arrays have been placed opposite to the payload deck of the spacecraft. Due to demisability requirements, a solar array drive mechanism was not a possible option. Thus, the solar panels are placed in plane with the bottom plate.

To provide a larger solar panel surface area, a hexagonal design has been chosen, so that in total 6 solar panels of around 1 m^2 each can be accommodated in the design. This will allow for sufficient power generation during the entire mission.

The entire avionics of the platform are based on the InnoSat product line of OHB Sweden [6]. Not only is the avionics hardware selected from the InnoSat product line catalogue, also the flight software, FDIR and AOCS will be InnoSat reuse. However, minor additions will be made in the field of AOCS to accommodate the added complexity of ADRIOS ClearSpace-1 with respect to the InnoSat predecessor missions. In line with the design to cost approach, the InnoSat components are all COTS components.

There are currently four InnoSat-based satellites in orbit [4,5], with nine to follow in the coming two years. The product line provides good flight heritage., moreover the components used for the InnoSat catalogue have also been flown on many other missions, and therefore also provide flight heritage outside of the InnoSat projects.

The mission CONOPS, with the multiple rehearsals and the required ability to try and abort the capture up to three times, leads to a high overall mission delta V of almost 300 m/s. In combination with the high mass of the payload and the resulting high one of the platform, this leads to a need of almost 90 kg of propellants.

The GNC/AOCS functions are split over the payload and the platform. The platform conducts all classical AOCS task, e.g. absolute attitude control, orbital manoeuvres etc., while the advanced RDV and proximity operations GNC is done by the payload.

The platform, therefore, consists of the classical AOCS sensors, magneto torquers, gyros, star trackers, magnetometers, sun sensors and reaction wheels. In addition, the platform features a full chemical propulsion system. The platform will be required to provide full 6 DoF motion. To this end a specific thruster layout is used, which is able to provide both force-free torque, and torque-free force. This layout has the disadvantage of a reduced efficiency, opposed to a layout that would instead introduce parasitic effects.

To comply with space debris mitigation requirements[1], a robust approach to collision avoidance manoeuvres against the client spacecraft is implemented, to ensure mission safety even if a failure of an equipment has occurred.

Figures 3 and 4 show the spacecraft design in both stowed configuration and the configuration with the solar panels and the capture system deployed.

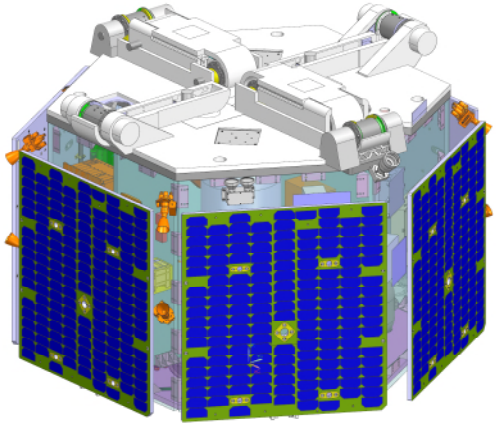

Figure 3: Spacecraft in fully stowed/launch configuration.

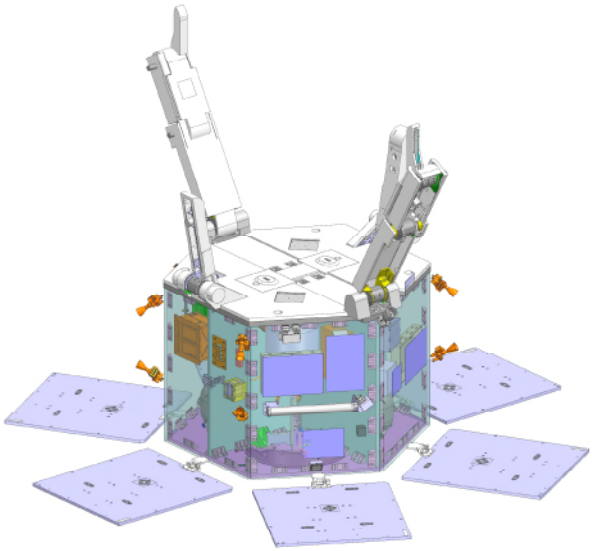

Figure 4: Spacecraft in fully deployed configuration.

After capture the spacecraft will be reconfigured to the stacked configuration, which is the servicer and the client combined to one satellite. The platform's AOCS system is powerful enough to control this full stack.

2.4.1 Payload

The payload developed by ClearSpace consists of a rendezvous sensor suite, a capture system mechanism

with its control electronics, a RDV and Proximity Operations (RPO) GNC subsystem as well as a dedicated X-band communication sub-system to downlink RDV data.

The payload units and sub-systems are integrated on three dedicated panels to allow for a modular approach between the platform and the payload. This modular approach will allow to integrate and test the payload independently of the platform before final mating of both platform and payload.

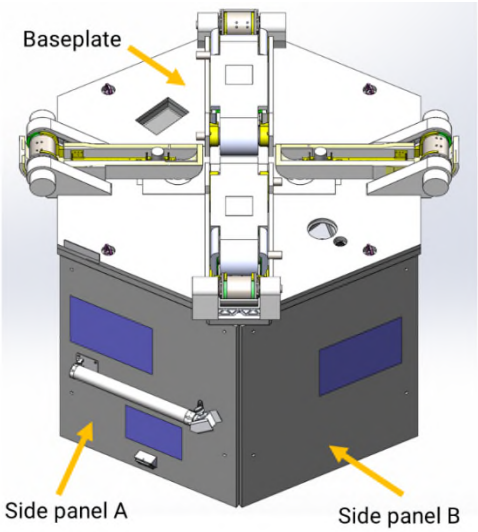

Figure 5: External view of the Payload Panels

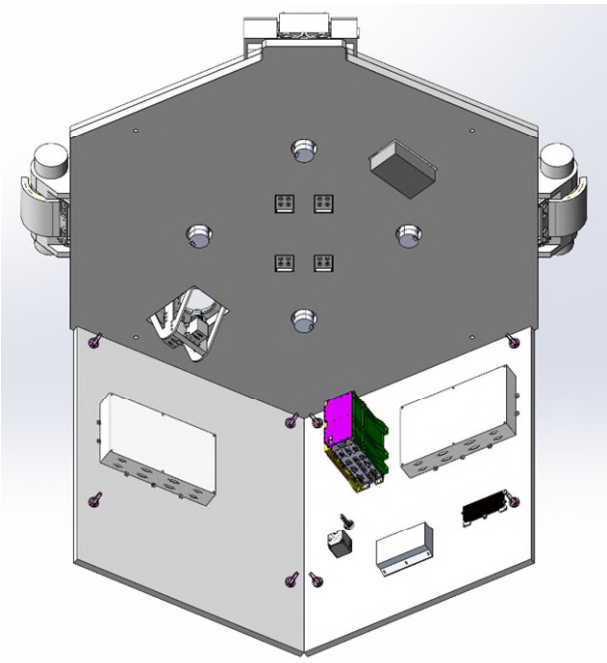

Figure 6: Internal view of the Payload Panels

The Capture System uses four multi-degree of freedom robotic arms to encompass and grasp the client space object and secure it on the servicer with enough force to hold it during subsequent stack manoeuvres without damaging the client and generating new debris. To successfully capture the client, the capture system has to perform four main functions:

- Start closing the arms around the client at the right time.
- Enclose the client without touching it to prevent an unwanted escape.
- Absorb the contact loads avoiding damaging the client or the servicer.
- Secure the client so it cannot move to prevent disturbances on the servicer's AOCS.

The prerequisite to successfully fulfil these functions, is a capable RPO GNC which needs to put the client within the Capture volume in a very precise way. The RPO GNC has the goal to take the servicer from the ~30km along-track distance down to capture, in subsequent steps, as described in the CONOPS here-before. This overall mission phase is called the rendezvous phase.

The rendezvous is initiated at a safe distance of several tens of kilometres. The closing is done based on a passively safe impulsive guidance strategy relying on angle-only navigation in the visible spectrum.

When reaching the vicinity of the client objects, fly-around orbits are established using the same guidance concept. During this phase the relative navigation is augmented with range measurements to improve the robustness of the relative navigation.

This simple and robust relative navigation concept is finally used to bring the servicer to the close vicinity of the target. Close-proximity activities are exercised in steps starting with commissioning of specific navigation capabilities, rehearsals and capture attempts. The main goal of the proximity operations is to validate the motion synchronization to be used for the capture afterwards. These activities rely on a more accurate relative navigation based on pose estimation and on continuous 6DoF control to follow advanced guidance trajectories.

As PROBA-I will be a non-cooperative and potentially uncontrolled client, it is possible that it will not be stabilized anymore but tumbling. The mission will thus be designed to be robust for the scenario of an uncontrolled PROBA-1 spacecraft. Consequently, the GNC system of ADRIOS ClearSpace-1 is designed to be able to capture a non-cooperating PROBA-1 in tumbling motion with rates up to 3 deg/s.

3 Design challenges

Designing the mission addresses challenging solutions in various fields: next to the mission objectives another big design driver has a big influence on the final design: compliance with regulations on space debris mitigation[1] and re-entry safety[2] defined by ESA.

Here, two main drivers have been identified, re-entry safety and prohibition of a collision with the client spacecraft and, thereby, avoidance of the creation of further space debris.

Re-entry safety directly relates to the potential casualty risk when the spacecraft will re-enter the atmosphere [2]. In a perfect scenario the spacecraft demises completely, and no remaining parts reach the ground. In the real case some parts will not demise because of their material in combination with the construction of the satellite, e. g. because other components shield the component from the heat during re-entry.

The space debris mitigation requirements[1] and therefore the Re-entry Safety Requirements [2] require the risk of a surviving spacecraft component to cause a casualty on Earth to be below 10^{-4}. ESA provides a simulation tool named DRAMA to assess the re-entry casualty risk[7].

If the re-entry casualty risk is too high, a controlled re-entry needs to be performed, which means that the spacecraft actively selects where the entry will happen, and an un-inhabited area will be targeted.

In this case, the on-board software would be involved into avoiding a catastrophic event. This situation will lead to very high standards for software development and testing (so called DAL A) as well as a redundancy concept for all aspects involved in the controlled re-entry. Both needs do not fit the design-to-cost approach followed by ADRIOS ClearSpace-1. It was therefore decided early in the design that the mission will be designed for an uncontrolled re-entry. This came at the cost of a design impact, as the design now needs to be tailored to demise sufficiently.

For ADRIOS ClearSpace-1 this led to the following design constraints:

- Tanks do not demise, so that their number needs to be limited. To achieve this, a design-to-maximum tank number or propellant mass approach has been followed.
- Solar Array drive mechanisms do not demise, requiring a more complex CONOPS to mitigate, containing phases of active pointing of the body-fixed solar panels. This pointing constrains the client observation times. In addition, solar panels have to be larger than required for constant sun pointing.
- Also in other domains, non-demisable materials will need to be avoided, and any future design iteration will also need to always keep an eye on the demisability aspect.

The next important design driving aspect from the space debris mitigation requirements is the capability of limiting the risk of creating further space debris[1]. This is mainly linked to avoiding unintentional contact or collision with the client spacecraft. At times when the servicer is in naturally stable orbits, there is no risk of a collision. However, once the servicer approaches the client closer, the passive safety concept does no longer apply, as the servicer is on trajectories that may lead to a collision if not actively controlled. Consequently, the servicer needs to be able to conduct a Collision Avoidance Manoeuvre (CAM) against the client spacecraft which will be triggered in case of an anomaly during non-passively safe operations. Such a CAM will break the formation as it will need to move the servicer to a position that is passively safe for at least 7 days[3].

Such a CAM will thus require recovering the relative navigation and formation flying by starting again the whole rendezvous approach before a new attempt at capture could be done. This means that the CAM requires a substantial amount of extra delta V: only one CAM plus getting back to the capture attempt will take more than 10% of the total mission delta V. This, in combination with the earlier discussion of the demisability of tanks, shows the complexity of designing such a capture mission, especially when trying to design a financially viable mission concept.

In addition, providing the required safety requires a high level of autonomy which is clearly linked to a high testing effort.

Focusing on the design challenges of the payload, the GNC and capture systems are the two main sub-systems that needs to be designed with a high level of confidence and interaction. The high precision required to safely manoeuvre around an uncontrolled object in space coupled with the need of capturing an un-prepared client without mechanical or visual device on the client, helping the capture, at the same time avoiding to create new debris upon capture, and with the possibility of having a randomly tumbling client, makes the design of the payload a real challenge. These are the main challenges applicable to the payload and related to ADR.

To answer these challenges, the right balance needs to be found between the following critical aspects:

- The complexity of the RPO GNC software to precisely manoeuvre and compensate as much as possible the natural motion and rotational speed of the object to be captured.
- The robustness and sturdiness (mass and size) of the capture system to cope with potential high relative movements at first contact.
- The design (shape) and control (dynamics) of the overall capture system to prevent a potential escape of the client after the first contact.
- The design of the capture system (at potential contact points) and knowledge of the client's structure, to prevent the creation of new debris upon capture.

All these design parameters need to answer the challenges while optimizing the complexity of the overall payload, launch mass, size and volume at launch. and reusability of the design for a commercial purpose.

The development of a versatile capture system enabling the capture of multiple object's shapes and dimensions with minimal modification of the design is key to answer the commercial challenges of ADR with a design-to-cost approach.

4 Conclusion and outlook

We have successfully managed the challenging mission objectives while satisfying outside constraints, resulting into a first iteration of a viable design.

We are benefiting from the heritage of the InnoSat platform as well as the ClearSpace legacy design.

After a successful SRR, we will enter Phase B2 to conclude the preliminary design. Here we expect to perform further refinements and optimisation on the current design.

The mission is expected to launch in 2028.

5 References

1. ESA, ESA Space Debris Mitigation Requirements. ESSB-ST-U-007, Issue 1, Revision 0, 30/10/2023
2. ESA, ESA Re-entry Safety Requirements, ESSB-ST-U-004, Issue 1, Revision 0, 04/12/2017
3. ESA, ESA Guidelines on Safe Close Proximity Operations, ESA-TECSYE-TN-022522, Issue 3, Revision 0
4. Lagaune, B., Berge, S., & Emrich, A. (2021). Arctic weather satellite, a microsatellite constellation for improved weather forecasting in arctic and globally. Small Satellite Conference 2021, Utah State University, Logan, UT
5. Pokrupa, N., & Lindberg, R. (2021). MATS-The Second Innosat Spacecraft to Launch in 2021. Small Satellite Conference 2021, Utah State University, Logan, UT
6. Bodin, P., Costales, D., & Edfors, A. (2024). Maximizing Autonomy on a Small Satellite Platform. Small Satellite Conference 2024, Utah State University, Logan, UT.
7. Braun, V., Funke, Q., Lemmens, S., & Sanvido, S. (2020). DRAMA 3.0-Upgrade of ESA's debris risk assessment and mitigation analysis tool suite. Journal of Space Safety Engineering, 7(3), 206-212.