REV.	ECN NO OR DESCRIPTION	REVISED	DATE
A	PDR NO:T130829-1A	Springwu	2013.11.20

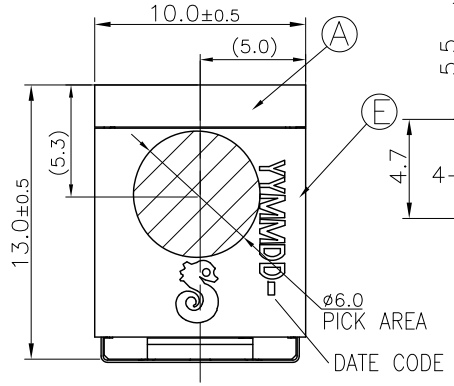

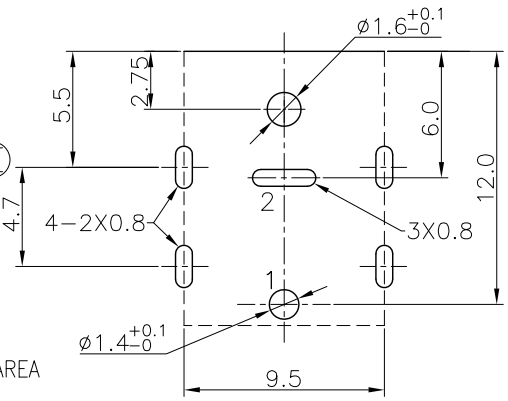

RECOMMENDED P.C.B LAYOUT

<TOP VIEW> TOLERANCE: ±0.05

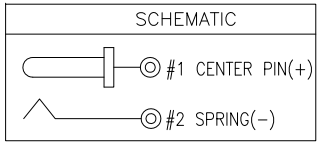

SPECIFICATIONS:

1.ELECTRICAL CHARACTERISTICS:
- 1-1.CONTACT RESISTANCE:30mΩMAX.(INITIAL)
- 1-2.DIELECTRIC WITHSTANDING VOLTAGE:250V AC FOR ONE MINUTE.
- 1-3.INSULATION RESISTANCE:100M ΩMIN. MEASURED BY 500V DC.

2.MECHANICAL CHARACTERISTICS:
- 2-1.INSERTION FORCE: 3.5Kgf Max.
- 2-2.WITHDRAWAL FORCE: 0.5Kgf~3.5Kgf.

3.LIFE TEST:5000 CYCLES MIN.
4.OTHER GENERAL SPEC. TO REFER "2DC-G213 SERIES SPEC".
5.TO CONFORM TO SINGATRON HAZARDOUS SUBSTANCE FREE SPEC.
6.HALOGEN FREE PRODUCT IDENTIFICATION MARK ON JACK:
7.HALOGEN FREE PRODUCT IDENTIFICATION LABEL ON PACKAGING:
8.FOR REFLOW SOLDERING LEAD-FREE PROCESS.
9.PACKAGING: TAPE & REEL
10.THE PANEL'S ID MUST BE GREATER THAN THE PLUG'S OD WHICH MUST HAVE A DIFFERENCE OF LESS THAN OR EQUAL TO 0.5 mm.(AS SHOWN IN FIGURE 1.)

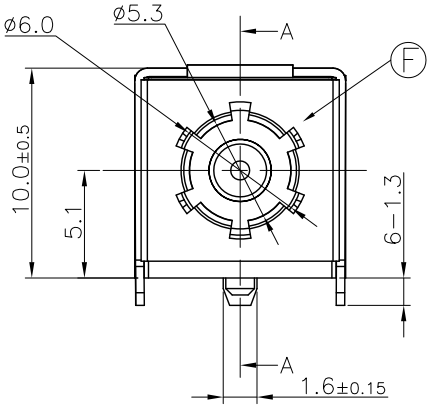

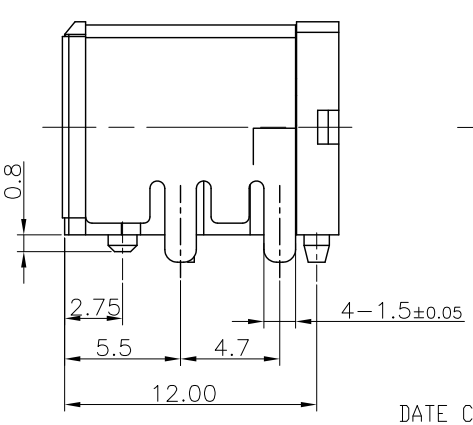

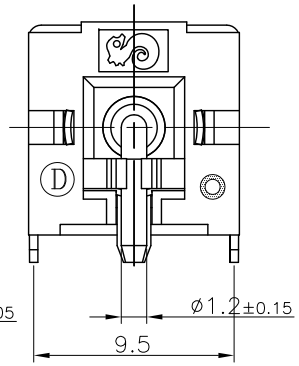

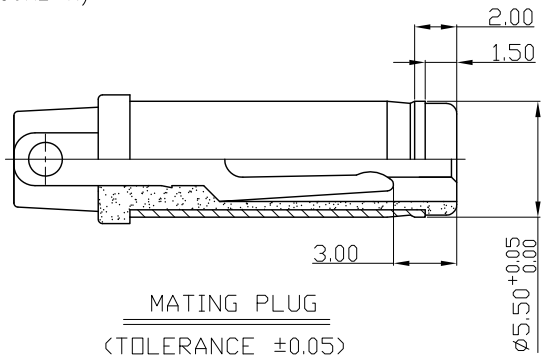

MATING PLUG

(TOLERANCE ±0.05)

DATE CODE: YYMMDD-
- DD: DAY
- MM: MONTH
- YY: YEAR

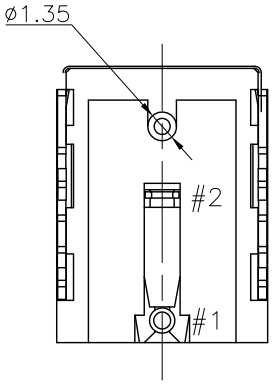

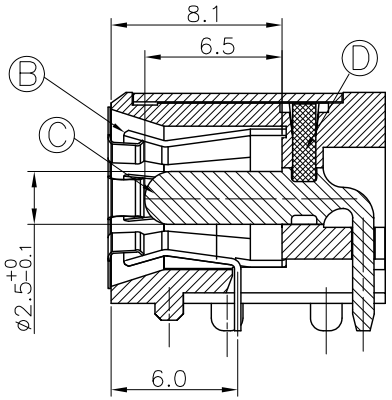

Section A-A

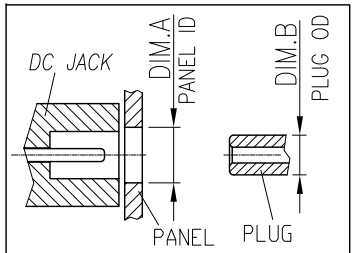

DIM. A-DIM.B < 0.5

FIGURE 1

NO	DESCRIPTION	QTY	MATERIAL	PLATING & COLOR
F	GROUND	1	STAINLESS STEEL 0.15t	N/A
E	SHELL	1	SPCC 0.4t	Ni 60u" Min OVER Cu 60u"MIN.
D	STOPPER	1	HIGH TEMP.THERMOPLASTIC UL94V-0	BLACK
C	PIN	1	BRASS	GOLD FLASH 1u" Min.
B	SPRING	1	COPPER ALLOY 0.3t	Sn 60u"Min,Ni 60u"Min.
A	BODY	1	HIGH TEMP.THERMOPLASTIC UL94V-0	BLACK

UNLESS OTHERWISE SPECIFED TOLERANCES

DECIMALS: X :±0.5, X.X :±0.3, X.XX :±0.2

ANGLES: X :±2°, X.X :±1°

Singatron Enterprise Co., Ltd.
信音企業股份有限公司

TITLE	DC POWER JACK			
DWN	Springwu	PART NO. 2DC-G213-B73F		
CHKD	Sky	SCALE:4:1	UNIT: mm	
APVD	Lussen	SIZE: A3	SHEET:1 OF 1	REV: A

CUSTOMER COPY

文件編號:RD-06-043-A