MODEL ROCKETRY

SUDARSHAN

PRELIMINARY DESIGN REPORT

PSIT KANPUR

2023-2024

Team

Sudarshan

Presents

TRISHUL

Tactical Rocket for Indian Small-scale High Utility Launch

TEAM
SUDARSHAN

CONTENT:

Common Abbreviations and Nomenclature

List of Figures

List of Tables

1. Summary of PDR Report

1.1. Team Summary

1.2. Launch Vehicle Summary

1.3. Payload Summary

2. Mission Overview

2.1. Mission Summary

2.2. System Requirement Compliance

2.3. System Level Configuration

2.4. Physical Layout

2.5. System Concept of Operation

2.6. Innovative Objectives Achieved

3. Launch Vehicle Criteria

3.1. Selection Design and Rationale of Launch Vehicle

3.2. Leading Launch Vehicle Design

3.3. Component Level Design

3.3.1. Airframe Material Selection

3.3.2. Anchor Selection

3.3.3. Barrowman Method of Calculating Normal Force

3.3.3.1. Normal Force Coefficient of Different Components of Rocket

3.3.4. Barrowman method for calculating C.P. of a Rocket

3.3.5. Nosecone Selection and Design

3.3.6. Conical Transition

3.3.7. Payload Bay

3.3.8. Motor Mount

3.3.9. Fin Can

3.3.9.1. Fin Configuration

3.3.9.2. Material Selection
3.3.9.3. Fin Shape Analysis
3.3.10. Separation Actuators
3.3.11. Boattail
3.3.12. Rail Buttons/Rings
3.4. Propulsion System Design
3.4.1. Motor Selection
3.4.2. Motor Retention
4. Payload Criteria
4.1. Payload Objective
4.2. Payload Success Criteria
4.3. Leading Payload Design
5. Subsystem Details
5.1. Payload Subsystems
5.2. Communication And Data Handling Subsystem
5.2.1. SIM800L
5.2.2. Xbee Pro S3B
5.3. Electrical Component Subsystem
5.3.1. INA291 voltage/current sensor
5.3.2. FPV Camera
5.3.3. SD Card Module
5.3.4. 18650 Battery
5.4. Sensor Systems
5.4.1. Arduino Nano 33 BLE Sense Rev2
5.4.2. Navic GPS Sensor
5.4.3. BMP280 Sensor
5.4.4. MAX6675 Thermocouple
5.4.5. Altimetry
5.4.6. Power Status
5.5. Circuit Diagram of Avionics
6. Vehicle Recovery System
6.1. Payload Subsystem

6.2. Recovery System Calculations
6.3. Separation And Deployment
6.3.1. Separation Method
6.3.2. Deployment of Rocketry System
6.3.3. Shock Cord
6.3.4. Shroud Lines
6.4. Calculations of Main Parachute
6.5. Calculations of Drogue Parachute
6.6. Shock Calculations
6.7. Parachute Drift Calculation
7. Vehicle Mission Performance Prediction
7.1. Simulation Methods
7.2. Simulation Flight Profiles
7.2.1. Flight Altitude
7.2.1.1. RockSim Simulations
7.2.1.2. OpenRocket Simulations
7.2.1.3. MATLAB Simulations
7.2.2. Flight Velocity
7.2.2.1. RockSim Simulations
7.2.2.2. OpenRocket Simulations
7.2.2.3. MATLAB Simulations
7.2.3. Flight Acceleration
7.2.3.1. RockSim Simulations
7.2.3.2. OpenRocket Simulations
7.2.3.3. MATLAB Simulations
7.2.4. Drag Force
7.2.4.1. RockSim Simulations
7.2.4.2. OpenRocket Simulations
7.2.4.3. MATLAB Simulations
7.2.5. Static Stability
7.2.5.1.1. RockSim Static Stability Margin
7.2.5.1.2. OpenRocket Static Stability Margin
7.2.6. Drag Coefficient

7.2.6.1. RockSim Simulations
7.2.6.2. OpenRocket Simulations
7.3. Finite Element Analysis
7.3.1. Calculations
7.3.2. Individual Component Testing
7.3.2.1. Nose cone FEA
7.3.2.2. Boattail FEA
7.3.2.3. Conical Transition FEA
7.3.2.4. Avionics Bay FEA
7.3.2.5. Thrust Plate FEA
7.3.2.6. Avionics Support Rod FEA
7.3.2.7. Lower Body Tube FEA
8. Flight Software Description
8.1. Software sequencing timing diagram
8.2. Sampling rate
8.3. Telemetry and Telecommand details
8.4. Data storage and Handling
8.5. Software reset loop
8.6. Simulation mode strategy
8.7. Test methodology
8.8. Proto version testing details
9. Ground Control Station Design and Overview
9.1. Ground station power supply and duration of operation
9.2. Antenna pattern
9.3. Antenna type
9.4. Telemetry display
9.5. Command software and interfaces
9.6. Real-time data collection scheme
9.7. Last data command at console display
9.8. User interface for real-time data collection
9.9. Ground System Transmission and Uploading of Data
9.10. Sensors & Payload telemetry
9.11. Libraries used

9.12. Communication test plans
10. Vehicle Preliminary Testing Plan
10.1. Mechanical Tests
10.1.1. Functional Development Tests
10.1.2. Functional Qualification Tests
10.1.3. Structural Qualification Tests
10.1.4. Vibration Tests
10.1.5. Thermal Tests
10.1.6. Vacuum Tests
10.1.7. Fit Checks
10.1.8. Parachute Deployment Tests
10.1.9. Acceptance Tests
10.2. Electronic Systems Tests
10.2.1. Power Supply
10.2.2. Ground Station
10.2.3. Flight Software
10.2.4. Environmental Tests
10.2.5. Checkout
10.2.6. Integrated Level Function Tests
10.2.7. Simulation Test Plans
10.2.8. Polarity Tests
10.2.9. Integration Tests
10.2.10. Interference Tests
11. Operation Plan and Quality Control
11.1. Manufacturing Process for Components and Subsystems
11.2. Quality Control Plan
11.3. Assembly and Integration Procedure
11.4. Launch Site Activities
11.5. Data Acquisition and Management
11.6. Exigency Management Procedures
12. Project Plan
12.1. Requirements Verification
12.2. Budget and Timeline

12.3. Conclusion

Common Abbreviations & Nomenclature

Acronym	Meaning
GCS	Ground Control Software
CONOPS	Concept Of Operation
C.P.	Centre of Pressure
C.G.	Centre of Gravity
CanSat	Can-Sized Satellite
GNSS	Global Navigation Satellite System
NavIC	Navigation with Indian Constellation
VM	Verification Methods
A	Acceptable (meets standards or guidelines)
I	Important (significant but not critical)
D	Desirable (nice to have but not essential)
T	Trivial (low priority or low impact)
FMEA	Failure Mode and Effects Analysis
CAD	Computer Aided Design
LED	Light Emitting Diode
IDE	Integrated Development Requirements
RTC	Real Time Clock
FSW	Flight Software
Creq	Competition Requirement

List Of Figures

Figure N0. :	Figure Details
Figure 1:	
Figure 2:	
Figure 3:	
Figure 4:	
Figure 5:	
Figure6:	
Figure 7:	
Figure 8:	
Figure 9:	
Figure 9:	
Figure 10:	
Figure 11:	
Figure 12:	
Figure 13:	
Figure 14:	
Figure 15:	
Figure 16:	
Figure 17:	
Figure 18:	
Figure 19:	
Figure 20:	

List Of Tables

Table No.	Table Name
Table 1:	Launch Vehicle Summary Table
Table 2:	Payload Summary Table
Table 3:	System Requirement Summary Table
Table 4:	Launch Vehicle Mission Criteria
Table 5:	Launch Vehicle Summary
Table 6:	Comparison Between Anchors
Table 7:	Normal Force coefficient of different components of rocket
Table 8:	
Table 9:	Payload bay Summary
Table 10:	Thrust Plate Summary
Table 11:	Centering Rings Summary
Table 12:	Different Shapes of Fins
Table 13:	Fins Summary
Table 14:	Fins Normal Force Coefficient Calculations
Table 15:	Boattail Summary
Table 16:	Motor Study Results
Table 17:	Payload Success Criteria
Table 18:	
Table 19:	
Table 20:	
Table 21:	
Table 22:	

1. Summary Of PDR Report

1.1. Team Organisation

Team Leader

Sparsh Verma
Team Lead
B. TECH CS-AI 2027

Dr. Raghuvendra
Coordinator

Mr. Sandeep Khare
Mentor

Dr. Manish Kumar
Mentor

Aditya Gupta
Avionics Head
B. Tech ECE 2025

Aman Nigam
Telemetry & Communication Engineer
B. Tech CS-IOT 2025

Ritish Katiyar
On-Board Computer Design Engineer
B. Tech ECE 2026

Vaishnavi Chaurasiya
Descent Control Engineer
B. Tech ECE 2026

Anshu Gupta
Ground Control Software Head
B. Tech CS-CYS 2026

Arjita Sahu
Ground Control Software Engineer
B. Tech CSE 2026

Riya Verma
Descent Control Engineer
B. Tech ECE 2027

1.2. Launch Vehicle Summary

Table 1: Launch Vehicle Summary Table

Feature	Value		
Target Altitude (ft)	3280.8 ft (1000m +/-100m)		
Outer Diameter(in.)	13.5mm		
Dimensions Of Launch Vehicle			
Section	Weight	Length	Diameter(outer)
Nose Cone	0.24 kg	25cm	16.8 cm
Payload Body Tube	0.351kg	55cm	16.4cm
Conical Transition			
Avionics Bay			
Recovery Bay			
Boattail			
Recovery System			
Main Parachute	0.896kg	8.93cm	400cm
Drogue Parachute of Payload	0.214kg	8cm	200cm

1.2. Payload Summary

2. Table2: Payload Summary Table

Payload Title	Payload Experiment Summary		
CANSAT	Rockets shall contain and completely enclose in straight line configuration, a CAN-Sized satellite		
	Length	**Weight**	**Diameter**
	40cm	1Kg +/-0.05Kg.	15cm

2. Mission Overview

2.1. Mission Summary

Main Objectives:

Build a rocket that can reach an altitude of (1000m +/- 100m) with the help of Solid Motor. The main objectives of the Model Rocketry would be-

- The overall length of the rocket in launch configuration, shall be less than 180cm.
- Rockets shall contain and completely enclose in straight line configuration, a CAN-Sized satellite of diameter 0.15m and length 0.40m, with a weight of 1Kg +/-0.05Kg.
- The Rocket body and the CANSAT shall return safely to the ground by means of safe landing, using deployable parachutes.
- The Amateur Model Rocket shall consist of necessary sensors to provide mandatory Real-time datasets such as Position data, altitude, pressure, temperature, orientation data, power data & system status.

- The Rocket communications radio shall be the XBEE / Zigbee radio series 1/2/pro / any other.
- All telemetry shall be displayed in near real-time during launch and descent. The received telemetry for the entire mission shall be saved on the ground station computer as a comma-separated value (.csv) file.

Innovative Objectives:

- Innovation in Materials used / Ignition concepts
- Innovative separation mechanisms / Jettisoning System
- Additional innovative sensors and communication systems
- Provision of video capture of the flight, and till touchdown of the launcher
- Innovative recovery techniques viz. HAM radio/Advanced beacons.
- Scientific experiment onboard the rocket

2.2. System Requirement Summary

Table 3: System Requirement Summary Table

Basic Rocket Requirements							
Id	Requirement	Rationale	Priority	VM			
				A	I	D	T
SY.1	Overall length of the rocket of the airframe structure, shall be less than **180cm**						
SY.2	Body mass including Motor shall not be greater than 10Kg (Cardboard body)						
SY.3	Motor mass shall be around 3Kg						
SY.4	The launch angle shall be in the range of 80- 85 (degree)						
SY.5	The rocket motor capacity cannot exceed 2800 Ns of total impulse.						
SY.6	Motors must be retained in the rocket during flight and at ejection by a positive mechanical means (clip, hook, screw-on cap, etc.)						

SY.7	Any sharp edges on the container body shall be avoided						
SY.8	The body of the rocket structure shall be painted with fluorescent colours						
SY.9	Use of GNSS receiver that includes NavIC						
SY.10	The data shall be displayed in near real-time on the ground station User Interface / Software.						
SY.11	The Flight software system shall have provision to record the data and save it on an onboard SD card.						

Payload Requirements							
Id	Requirement	Rationale	Priority	VM			
				A	I	D	T
SY.1	Rockets shall contain a CAN-Sized satellite of diameter **0.15m** and length **0.40m**						
SY.2	Weight of CANSAT 1Kg +/- 0.05Kg.						
SY.3	The Rocket body and the CANSAT shall return safely to						

	the ground using deployable parachutes.						
SY.4	CANSAT shall contain an altimeter and an accelerometer						

Structure Requirements

ID	Requirement	Rationale	Priority	VM			
				A	I	D	T
SY.1	The vehicle structure shall be built to survive 15g of launch acceleration & 30g of shock.						
SY.2	Tri- axis accelerometers shall be mounted on the vehicle to derive the Inertial loads						
SY.3	The design calculations shall also substantiate the structural loads experienced on the vehicle						

Avionics System Requirements

Id	Requirement	Rationale	Priority	VM			
				A	I	D	T
SY.1	All electronics shall be enclosed and shielded from the environment by suitable packaging						
SY.2	Electronic circuit boards must be hard mounted						

SY.3	Battery capacity to support up to 30 Minutes of wait-in on the launch pad			
SY.4	The battery source may be alkaline, Ni-Cad, Ni-MH or Lithium ion			
SY.5	An easily accessible battery compartment must be included			
SY.6	The Rocket communications radio shall be the XBEE / Zigbee radio series 1/2/pro / any			
SY.7	The XBEE / any radios used shall have their NETID/PANID			
SY.8	The XBEE radio / any radio being used can operate in any mode as long as it does not interfere with other XBEE / other communication systems.			
SY.9	The flight software shall maintain and telemeter an indicator of the flight software state.			

Ground Station and Telemetry Requirements							
Id	Requirement	Rationale	Priority	VM			
				A	I	D	T

SY.1	All telemetry shall be displayed in near real-time during launch and descent.						
SY.2	Plot data in real-time during flight.						
SY.3	Ensure to have separate channels for rocket and CANSAT						
SY.4	The ground control station antenna shall be elevated from ground level						
SY.5	Stability of the ground station must be ensured						
SY.6	Telemetry shall include mission time with one second or better resolution.						
SY.7	The ground station shall be able to command the rocket on parameters like barometric altitude, accelerometer readings etc						
SY.8	The ground station shall generate .csv files of all sensor data						
SY.9	Teams shall plot each telemetry data field in real-time during flight						
SY.10	The ground station shall include one laptop computer, XBEE radio and a hand-held antenna.						
SY.11	Upon powering up, the Rocket shall collect the required telemetry at a 1 Hz sample rate						

Descent And Recovery Requirements							
Id	Requirements	Rationale	Priority	VM			
				A	I	D	T
SY.1	The Rocket shall contain a minimum of one descent control mechanism (parachutes) to be used during the descent phase.						
SY.2	The descent rate of the launcher body and payload bay shall be between 2 to 5m/s (+/- 0.5 m/s)						
SY.3	The CANSAT Payload shall not use any hazardous chemical-based explosive or pyrotechnic devices.						
SY.4	f the Rocket uses multiple stages of descent control, the drogue chute shall deploy right after the release of the Payload.						
SY.5	The descent control mechanism & all the attached components should survive 30g of shock at the time of launch and separation.						

2.3. System Level Configuration

A system-level configuration of model rocketry involves the integration of multiple subsystems that work together for a successful flight and recovery:

1. **Propulsion System:**
   - **Rocket Motor:** Provides thrust, typically solid-fuel motors.
   - **Ignition System:** Electrically ignites the motor for launch.
2. **Structural System:**
   - **Airframe:** Lightweight body tube that holds components.
   - **Nose Cone:** Streamlined for aerodynamics.
   - **Fins:** Provide stability during flight by maintaining direction.
3. **Guidance & Stability:**
   - **Stabilization Fins:** Ensure straight flight.
   - **Advanced Control:** Optional active control (gyroscopes, servos) for high-level stability.
4. **Avionics & Electronics:**
   - **Altimeter:** Measures altitude, triggers parachute deployment.
   - **Accelerometer & Sensors:** Collect flight data.
   - **GPS & Telemetry:** Tracks location and sends real-time data.
5. **Recovery System:**
   - **Parachute:** Deployed to slow descent for safe landing.

- **Deployment System:** Controls parachute release based on altitude or timing.

6. **Power System:**
   - **Battery:** Powers all onboard electronics (altimeter, GPS, etc.).
7. **Payload:**
   - CANSAT
8. **Ground Support:**
   - **Launch Pad:** Holds and guides rocket at liftoff.
   - **Ignition Controller:** Safely initiates the launch.

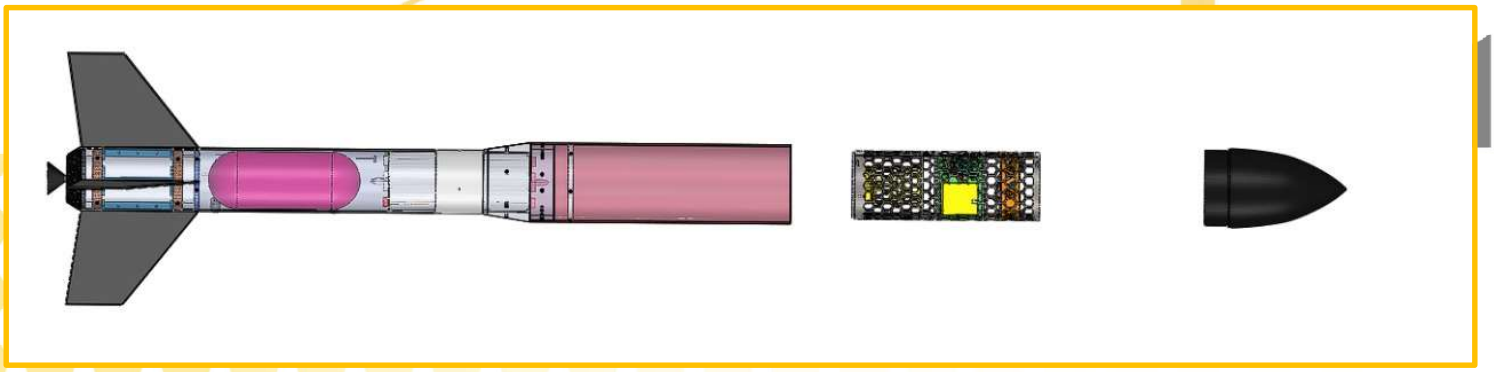

Figure 1: Rocket Structure View

2.4. Physical Layout

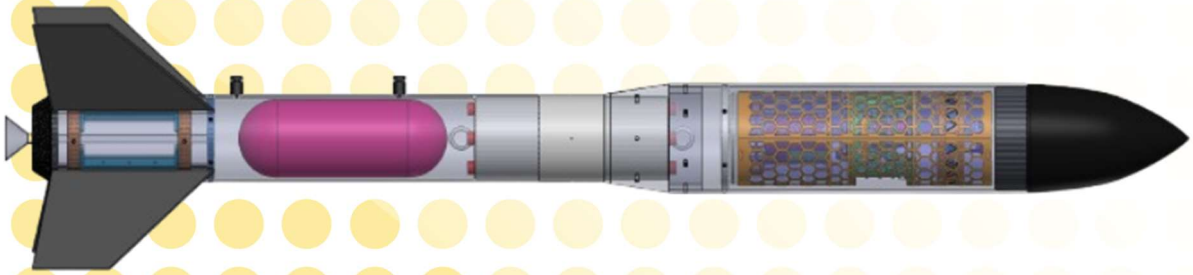

Figure 2: Physical Layouts of Rocket

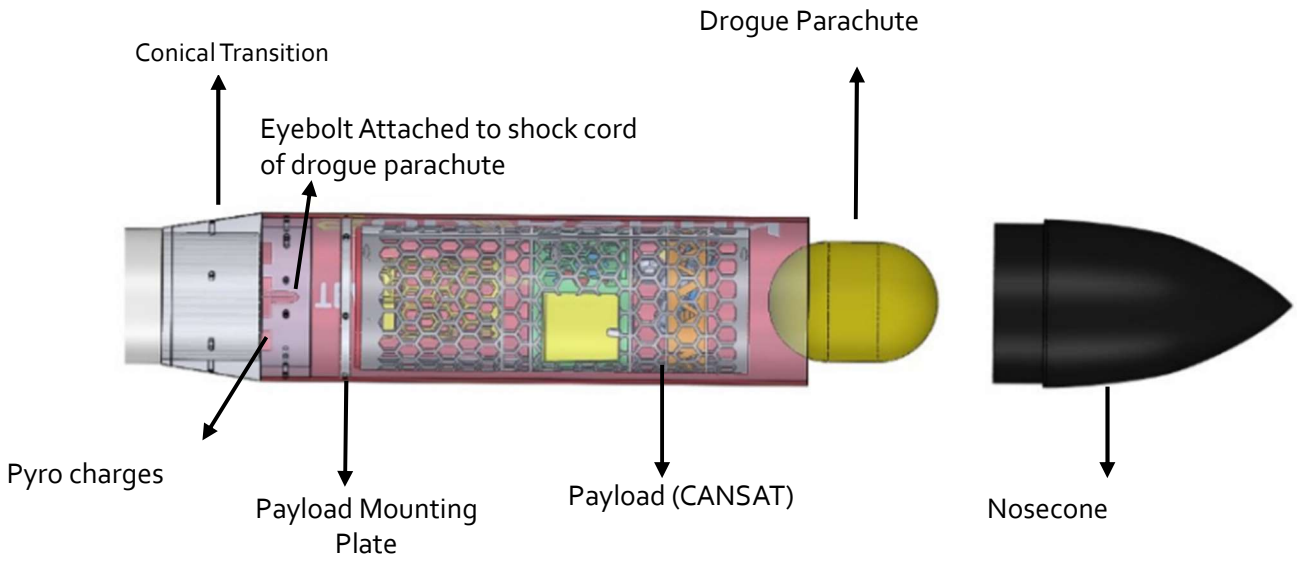

Figure 3: ***Physical Layout of Upper body tube***

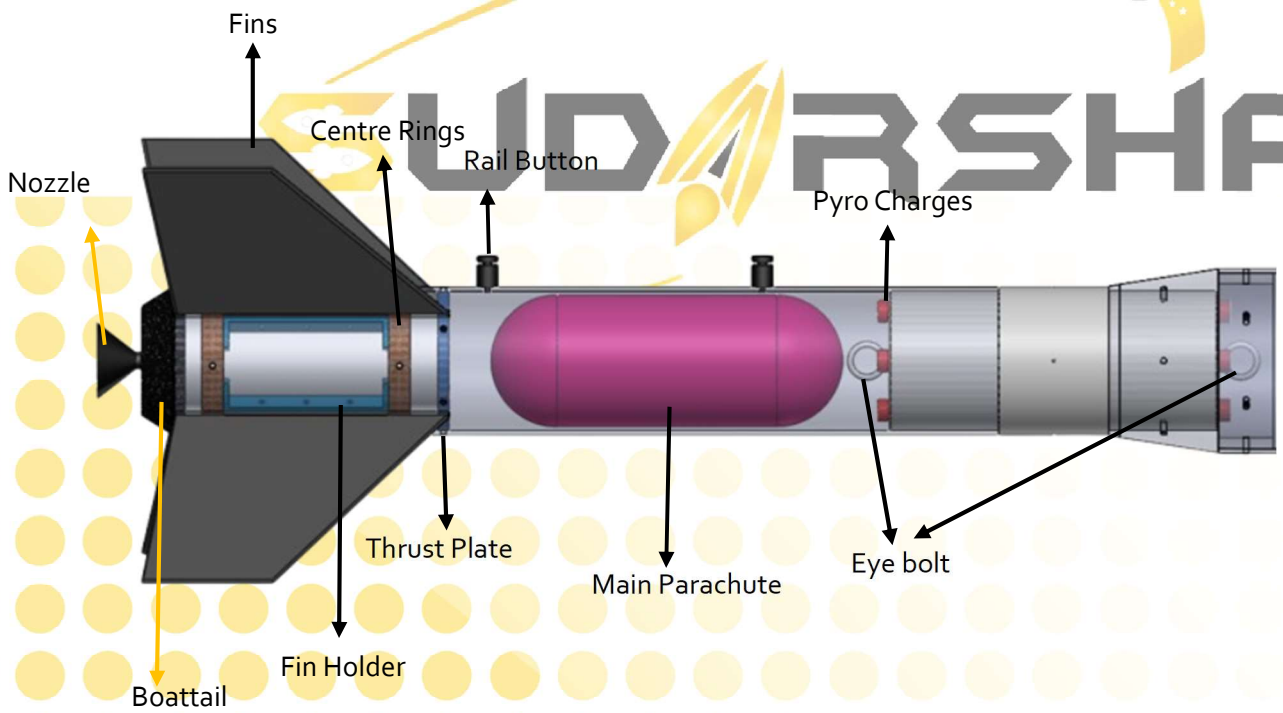

Figure 4: ***Physical Layout of lower Body tube***

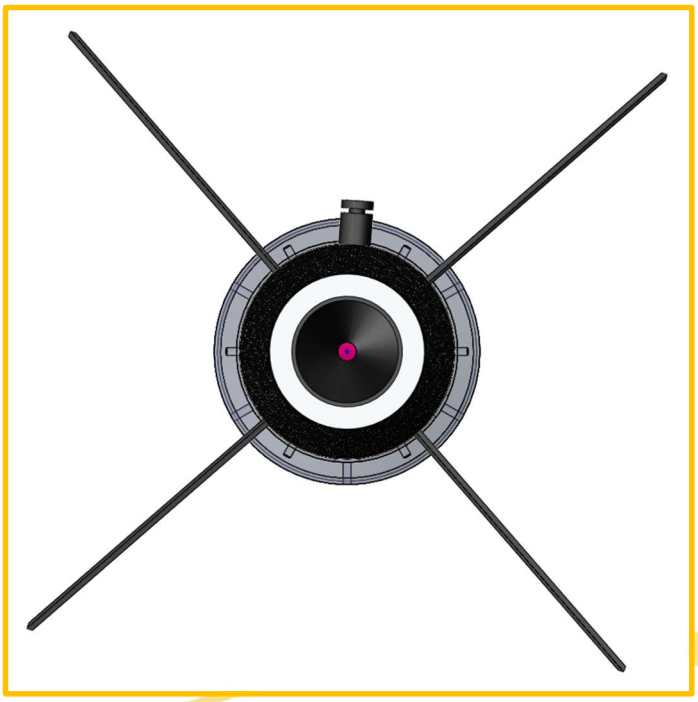

Figure : Bottom view of Rocket

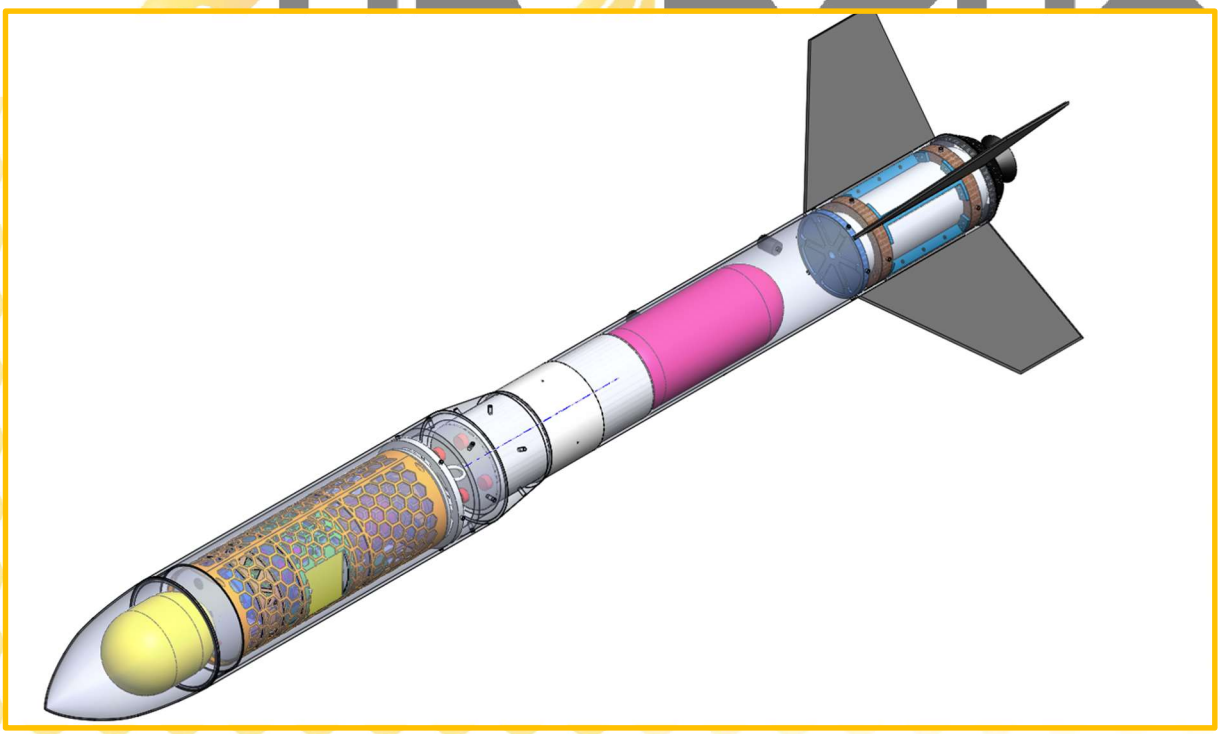

2.5. System Concept of Operation

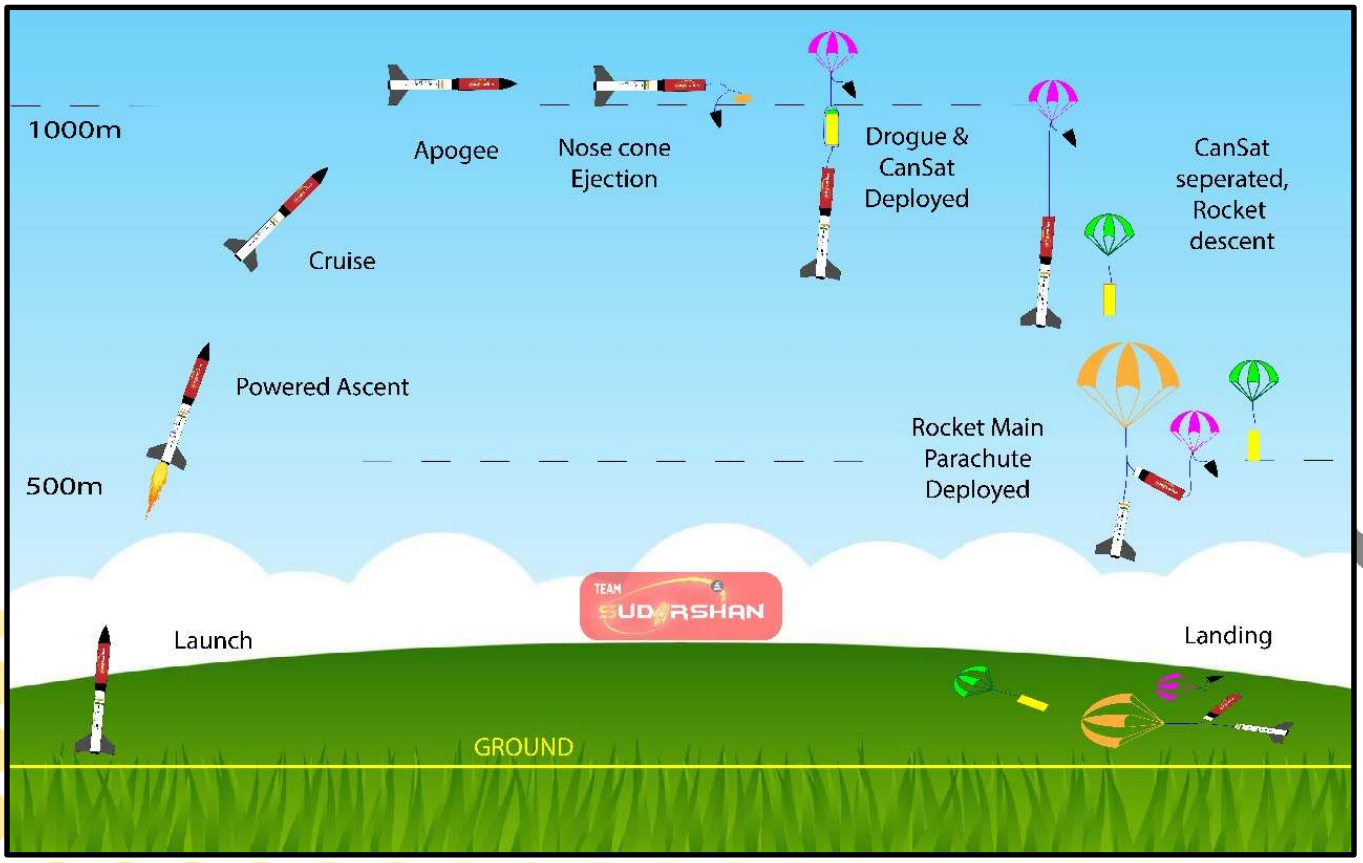

Figure 5: Operation Launch Vehicle

Stage 0: Launch at 0 ft AGL

Stage 1: At 500 m powered Ascent

Stage 3: At 1000 m Nose Cone Ejection with the help of pyro charges and deployment of Drogue Parachute of CanSat

Stage 4: At 500 m Main Parachute of Rocket is Deployed

Stage 5: Recovery of Launch Vehicle and CanSat

Pre-Launc

-Team Briefing

-Electronic and mechanical Integrity checks

-Competetion area arrival

-GCS Setup

Launch

-Launch and event of CONOPS

-Telemetry data obtaining and .csv file creation using gcs software

Post-Launc

-Recovery of Launch vehicle and CanSat using indicators, fluorescent color, GNSS telemetry and audio beacon

-Returning to GCS

-Analysis of sampled data

-Preparation of PFR and presentation to jury

★ Innovative Objectives Achieved

- The concept of **black box** for model rockets can indeed be a compelling and innovative idea. A black box can enhance safety, performance analysis, and educational value.

Figure : The Black Box

A Silicon case for a black box designed to withstand physical stress, shock, vibration, heat, water/humidity and electrical discharge protection of data.

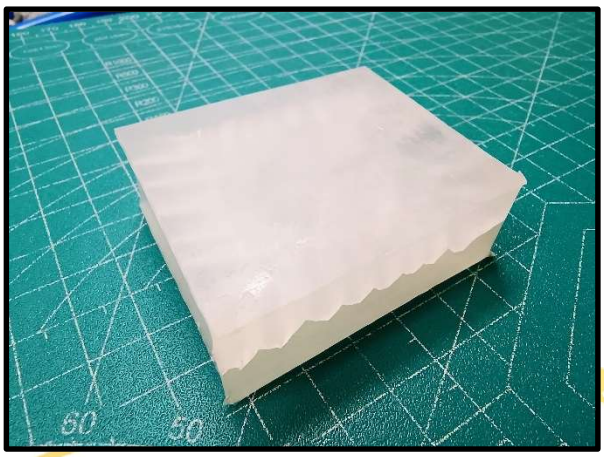

Figure : Packed Black Box

3. Launch Vehicle Criteria

3.1. Selection Design and Rationale of Launch Vehicle

Launch Vehicle Mission Statement

The mission of this launch vehicle is to reach the target apogee and return safely to the ground in a reusable condition. Additionally, the launch vehicle will support the payload mission by safely ejecting the payload at main deployment.

Launch Vehicle Success Criteria

Mission success is defined by compliance with INSPACE. Levels of success are defined in more detail in Table 3-1 below.

Table 4: Launch Vehicle Mission Criteria

Level Of Success	Definition
Complete Success	- Launch vehicle recoverable - Nominal launch vehicle take off and descent - Lander is undamaged during deployment and after landing - Launch operations can be repeated the same day - Achieved apogee is upto 1000m (+/-100m)
Partial Success	- Launch vehicle repairable - Successful launch vehicle take off and descent - Lander repairable following landing - Achieved apogee is upto 1000m(+/-100m)
Partial Failure	-Launch vehicle repairable

	- Successful launch vehicle take off and unsuccessful descent - Lander repairable following landing - Achieved apogee is below 1000m
Complete Failure	-Launch vehicle unrecoverable - Lander unrecoverable

3.2. Launch Vehicle Design

TEAM
SUDARSHAN
TRISHUL

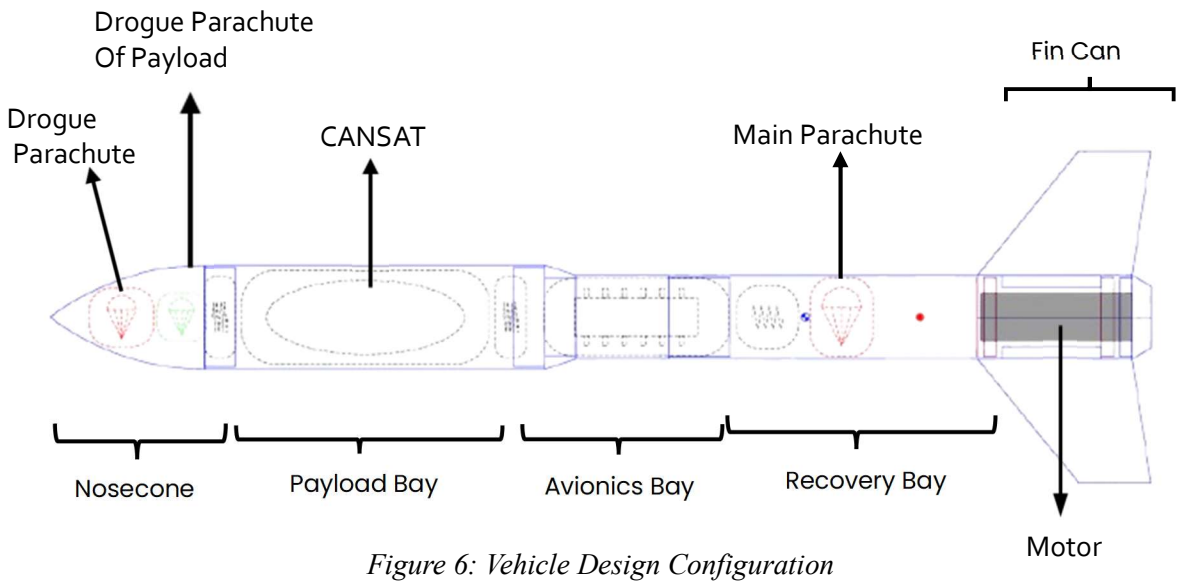

Figure 6: Vehicle Design Configuration

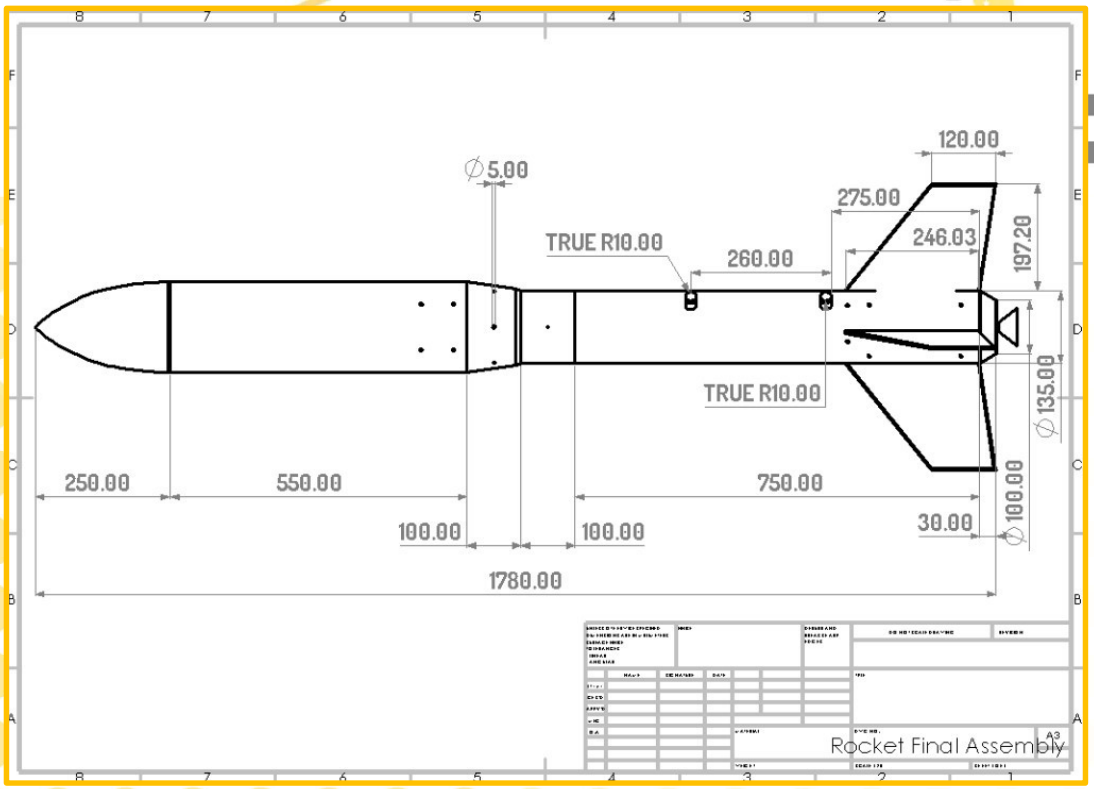

Figure 7: CAD Drawing of Rocket Assembly

Table 5: Launch Vehicle Summary

Section	Internal Components
Nosecone	Drogue Parachute
Payload Bay	Payload (CANSAT)
Fin Can	Shock Cord, Motor, Motor Mount, Fins
Recovery Bay	Main Parachute
Avionics Bay	Avionics Components

3.3. Component Level Design

3.3.1. Airframe Material Selection

Currently, the leading choice for the body of the launch vehicle is Resin reinforced carboard body tube. It refers to a type of body tube made from sack Kraft paper that is impregnated or bonded with resin to enhance its strength and durability.

Here's a breakdown:

Sack Kraft Paper: A strong, durable type of paper made from wood pulp, known for its high tensile strength, commonly used in packaging. The fibres are unbleached, which gives it a brown colour and robust properties.

High Burst Factor (BF): The burst factor refers to the strength of the paper, indicating its resistance to bursting under pressure. A high burst factor means the material can withstand greater internal or external pressure.

Resin Bonded: Resin bonding involves impregnating or coating the paper fibres with resin, which significantly increases the material's stiffness, waterproofing, and overall structural integrity. For a rocket body tube, this type of material would be advantageous because of its combination of lightweight properties, high strength, and resistance to pressure, which are essential for maintaining structural integrity during flight and handling the forces generated during rocket propulsion.

3.3.2. Anchor Selection

When launching a model rocket, securing it properly to the ground is essential for safety and stability. Anchors are used to hold the launch pad or rail securely in place, ensuring the rocket's stability before launch.

Table 6: Comparison between Anchors

Feature	Eyebolt	U-Bolt	J-Bolt	Eye lag
Best Application	Shock cord, recovery system	Securing cylindrical parts	Temporary hanging or anchoring	Lightweight applications
Security	High (closed loop)	Very high (two-point grip)	Low (open hook, less secure)	Moderate (screws into soft material, but may loosen over time)
Strength	Moderate-High	High	Low	Moderate

Ease of Use	Simple attachment	Requires two nuts/backing	Quick but less reliable	Easy to install into soft surfaces
Risk of Slipping	Low (especially with closed loop)	Very low	High	Moderate (can unscrew or pull out under stress)
Durability	High (solid metal, suitable for heavy loads)	High (strong metal clamp)	Low (hook shape weakens)	Moderate (less secure if repeatedly unscrewed/stressed)

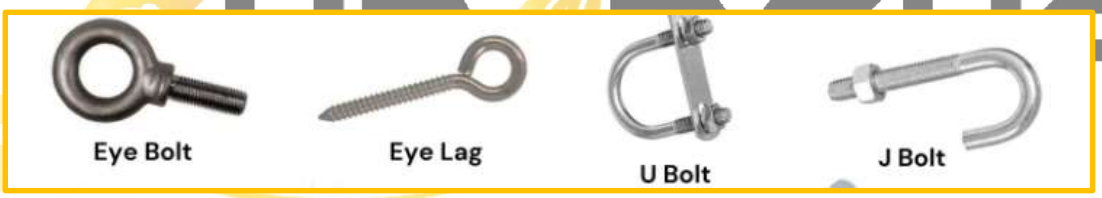

Figure 8: Different types of Anchors

In summary, **eyebolts** are the most reliable and versatile choice for model rocket recovery systems and critical attachment points, making them preferable over U-bolts, J-bolts, and eye lags in most rocketry applications.

3.3.3. Barrowman Method of Calculating Normal Force

The normal (lateral) force acting upon a particular rocket component such as rocket body, nosecone, conical transition (such as shoulder or boattail) and fins due to non-zero angle of attack is calculated as such:

$$\boxed{N_C = q\,A\,\alpha(C_N\alpha)_C}$$

Where:

N_C = normal force, (lbf or Newtons)

Subscript *c* refers to the particular component of interest (such as nosecone or fin)

q = dynamic pressure = ½ ρ V^2, lbf/in^2 or N/m^2

A = reference area = ¼ π D^2

where D = nosecone base diameter (in. or m)

V = vehicle velocity, ft/sec or m/s

$C_{N\,\alpha}$= slope of the normal force coefficient at α = 0 ($\partial C_N/\partial\alpha \mid \alpha=0$) (per radian)

α = effective angle of attack (radians)

Slope is defined as the *rise over run* of a straight-line tangent to the curve, at α=0, of the normal force coefficient versus angle of attack.

The slope of the straight line is change (Δ), or *rise*, in force coefficient over the corresponding change, or *run*, in attack angle. The curve of the function is seen to be nonlinear, with the slope gradually increasing as alpha increases.

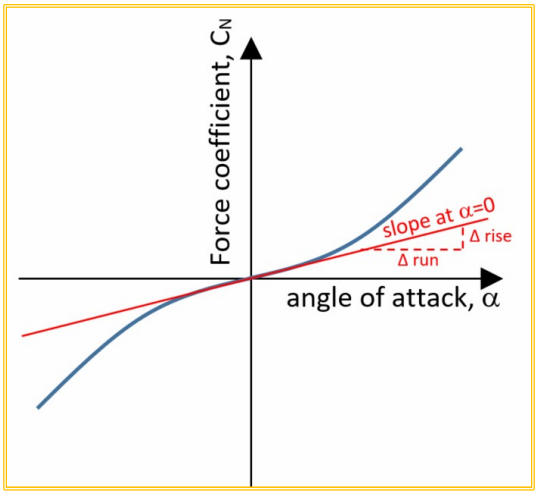

Figure 9: Concept of slope of force coefficient

Key assumptions applicable to the Barrowman method:

- *Flow over rocket is smooth and frictionless.*
- *Flow over rocket is subsonic*
- Angle of attack is small
- *Nosecone tip is sharp*
- *Rocket fin set consists of either 3 or 4 fins*
- *Fins are thin flat plates*

Calculations according to our Specifications: -

Units are in Newtons(N) and Metres(m)

$$\propto = 5^o \ = 0.0872\ radians$$

$$Diameter, d = \ 0.168m$$

$$Area, A = \frac{1}{4}\pi\ 0.168^2$$

$$A = \ 0.022\text{m/s}^2$$

Nosecone profile is ogive, hence

$$V = 140\ m/s$$

Air density = 1.225 kg/cu.metre

The dynamic pressure is therefore:

$$q = \frac{1}{2}\rho V^2$$

$$q = \frac{1}{2} \times 1.225 \times 140^2$$

$$q = 12005 \mathrm{N/m^2}$$

Now as Normal force,

$$N_C = q\ A\ \alpha(C_N\alpha)_C$$

$$\boxed{N_C = 12005 \times 0.022 \times 0.0872 \times (C_N\alpha)_C}$$

3.3.3.1. Normal Force Coefficient of Different Components of Rocket

Table 7: Normal Force Coefficient of Different Components of Rocket,

Nosecone	
Shape	Ogive
L_N=	250.0mm
d=	164.0mm
$(CN)_N$=	2 per radian (Normal Force Coefficient, nosecone)
X_N/L_N=	0.466
X_N=	116.5mm (Distance along body to C.P. of nosecone)
Conical Transition	
d_F=	164.0mm
d_R=	134.0mm
L_T=	100.0mm
X_P =	800.0mm
$(CN)_T$ =	-0.634 per radian (Normal Force Coefficient, transition)
X_T=	848.3mm (Distance along body to C.P. of transition)
Boattail	
d_{FB}	135.0 mm
D_{RB}	100 mm
L_{TB}	30 mm

X_{PB}	1750
$(CN)_{TB}$	-0.583 per radian (Normal Force Coefficient, boattail)
X_{TB}	1764.3 mm (Distance along body to C.P. of boattail)
Fins	
N =	4
R =	62.5mm
S =	200.0 mm
C_R =	250.0 mm
C_T =	130.0 mm
X_R =	163.0mm
X_B =	1500.0 mm 0.4756 rad. (mid-chord sweep angle) 27.25 deg.
L_F =	225.0 mm (length of fin mid-chord line)
$(CN)_F$ =	11.011 per radian (Normal Force Coefficient, fins)
X_F =	1622.0 mm (Distance along body to C.P. of fins)
$(CN)_R$ =	**11.79 (Normal Force Coefficient, rocket)**
X_{CP} =	**1401.2mm (Distance along body to C.P. of rocket)**

for **nosecone $(C_{N\alpha})_N$ = 2 radian,**

Normal Force on Nosecone

$$N_N = 12005 \times 0.022 \times 0.08726 \times 2$$

$$\boxed{N_N = 46.1136 \text{ N}}$$

For **conical transition $(C_{N\alpha})_T$ = -0.634 radian,**

Normal force on Conical Transition

$$N_T = 12005 \times 0.022 \times 0.08726 \times (-0.634)$$

$$\boxed{N_T = -14.618 \text{ N}}$$

For **Boattail $(C_{N\alpha})_{BT}$ = -0.58 radian,**

Normal force on Boattail

$$N_{BT} = 12005 \times 0.022 \times 0.08726 \times 0.58$$

$$N_{BT} = -13.442 \text{ N}$$

For **Fins $(C_{N\alpha})_F$ = 11.011 radian,**

Normal Force on Fins

$$N_F = 12005 \times 0.022 \times 0.08726 \times 11.011$$

$$N_F = 253.878 \text{ N}$$

Normal Force on Whole body (Rocket),

$$N_R = 12005 \times 0.022 \times 0.08726 \times 11.79$$

$$N_R = 271.71 \text{ N}$$

Normal force on rocket by adding the normal force of components on rocket,

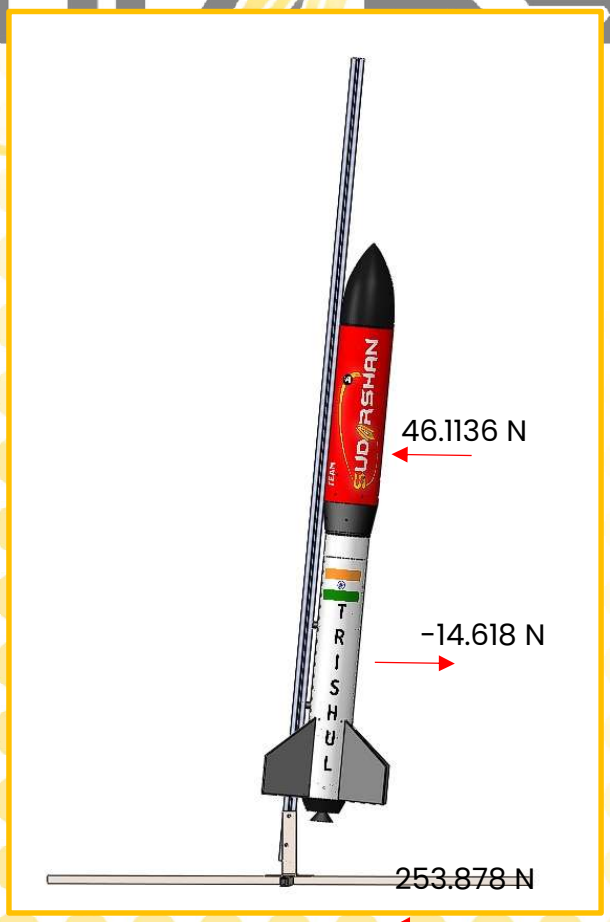

$$N_R = N_N + N_T + N_{BT} + N_F$$

$$N_R = 46.1136 + (-14.618) + (-13.4421) + 253.878$$

$$N_R = 271.93$$

Figure 10: Normal Force Distribution

3.3.4. Barrowman method for calculating C.P. of a Rocket

The stability of a rocket is affected by the relative locations of its Centre of Pressure (C.P.) and its Centre of Gravity (C.G.). A rocket is statically stable if its C.P. is aft of its C.G. The Centre of Gravity of a rocket is typically measured, being its balance point. The Centre of Pressure is determined from its geometry using a theoretical method. The method presented here is commonly referred to as the *Barrowman Method*.

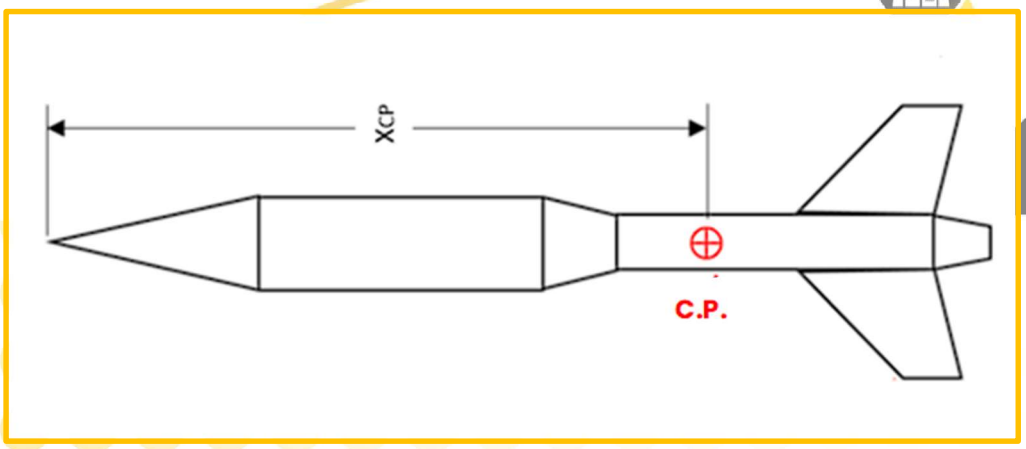

Figure 11: C.P. in a rocket

<u>Applicability of the Method:</u>

There are a number X_{CP} sumptions made in the original report. The key assumptions which affect the applicability of the methods are:

- Point of the nosecone is sharp
- Point of the nosecone is sharp
- Angle of attack of the rocket is nearly zero
- Rocket velocity is subsonic

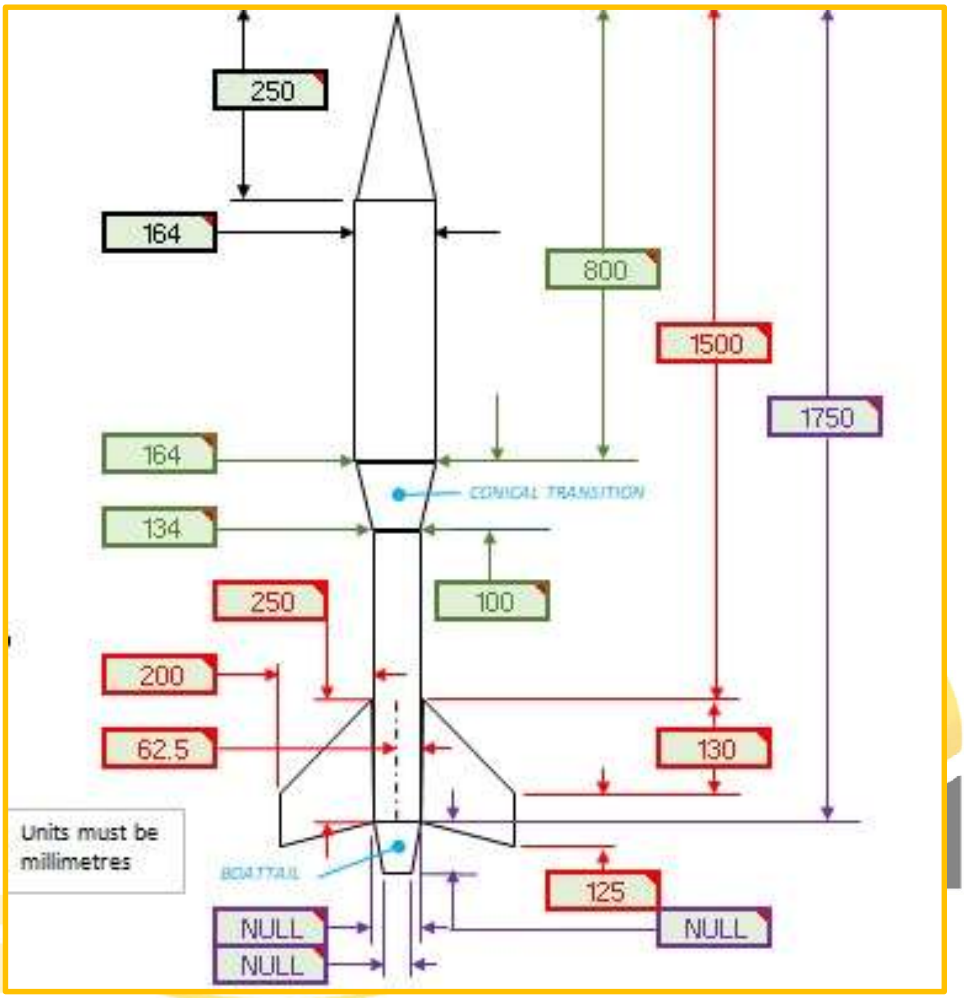

- Rocket is axially symmetric

Figure 12: Design Dimensions for calculation

3.3.5. Nose Cone Selection and Design

The team decided that it was imperative that the subscale accurately model the aerodynamics of the full scale as closely as possible, so an Ogive nose cone design was chosen. An Ogive nose cone is derived from a segment of a circle in such a way that it has a pointed tip and is tangent to the body of the outer diameter of the launch vehicle. Additionally, the fragility that would be introduced to the nose cone by

attempting to manufacture a Von Karman was ultimately decided to not be worth the additional aerodynamic performance it would

provide. A 10:6.6 Ogive design was chosen, as it provided the most

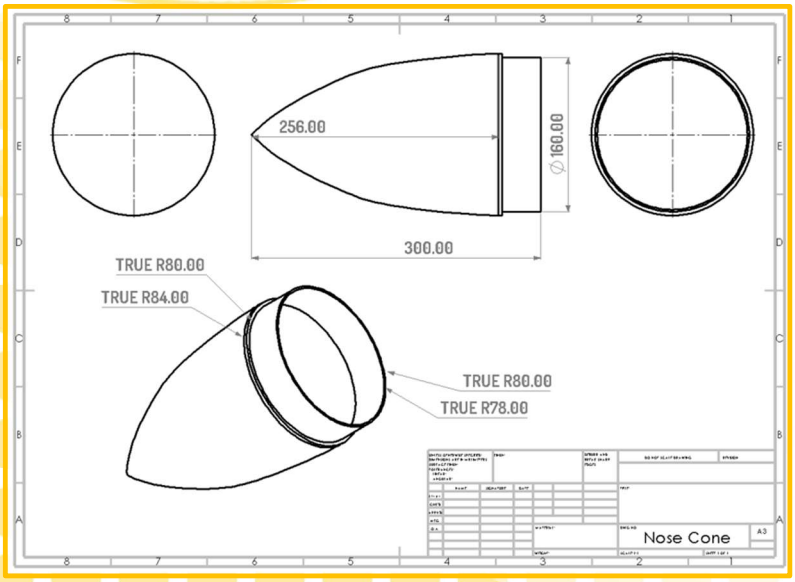

desired stability margin for the vehicle. The nosecone excluding payload hardware and any ballast, are expected to weigh 0.24kg.

Figure 13: Nosecone

Figure 14: CAD Drawing of Nose Cone

Location of Centre of Pressure:

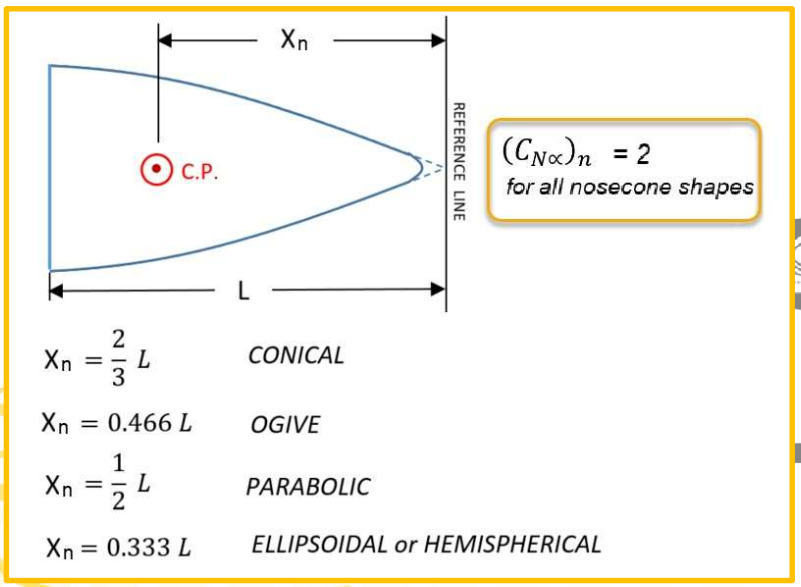

The normal force resultant, acts at the *centre of pressure (C.P.)* of each of the components. The expressions for the C.P. location of nosecone is summarized below. (Units- inches or mm)

Figure 15: Location Of C.P. of Nose Cone

3.3.6. Conical Transition

A conical transition refers to a section of a rocket that tapers from one diameter to another, forming a cone shape between two body tubes or sections of different sizes. These transitions serve both aerodynamic and structural purposes, and they help to reduce drag while maintaining a smooth flow of air over the rocket.

The conical shape helps reduce turbulence and drag as air flows over the rocket. By smoothly transitioning between two diameters, the airflow is less likely to create resistance that can slow down the rocket.

Our team decided to place the conical transitions between the rocket's body tube and payload bay. It will help to ensure the components fit together while maintaining stability.

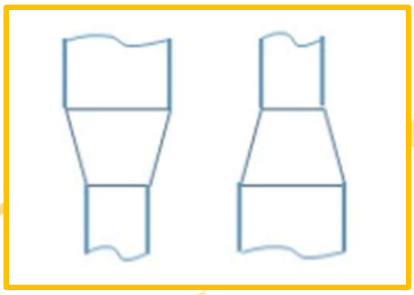

Figure 17: Different shape of conical transition

Conical transitions can be made from various materials, such as lightweight plastics, balsa wood, or cardstock, depending on the rocket's scale and complexity.

In model rocketry we are using Polypropylene (PP) Co-Polymer for conical transition. PP co-polymers are known for their strength, flexibility, and resistance to impact, making them suitable for components that need to withstand stress and environmental factors.

Using PP co-polymer for a conical transition would be beneficial for a durable, lightweight, and flexible component, especially in cases where the rocket might experience impact or stress during flight or recovery.

Location of Centre of Pressure of Conical Transition

The expressions for the C.P. location of conical transition is summarized below.

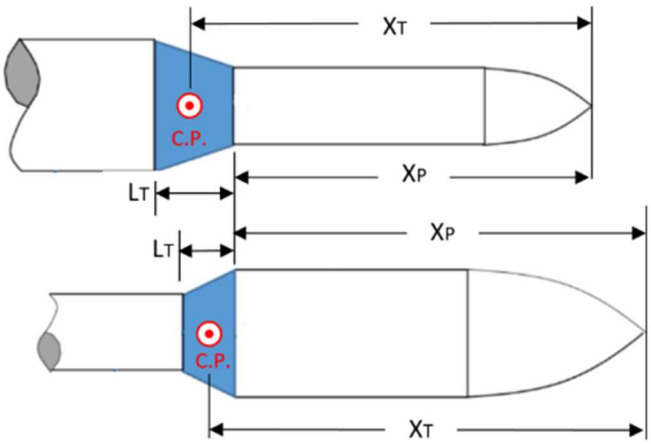

$$X_T = X_P + \frac{L_T}{3}\left[1 + \frac{1 - \frac{d_1}{d_2}}{1 - \left(\frac{d_1}{d_2}\right)^2}\right]$$

Figure 17: C.P. location of conical transition

Where:

d_1 is the forward diameter of the transition,

d_2 is the aft diameter of the transition.

Table 8: Conical Transition Summary

Conical Transition Summary				
Material	Length	Aft Diameter	Fore Diameter	Mass
PP Co-Polymer	5 cm	13.5 cm	16.4 cm	0.168 kg

Normal Force Coefficient for Conical Transition

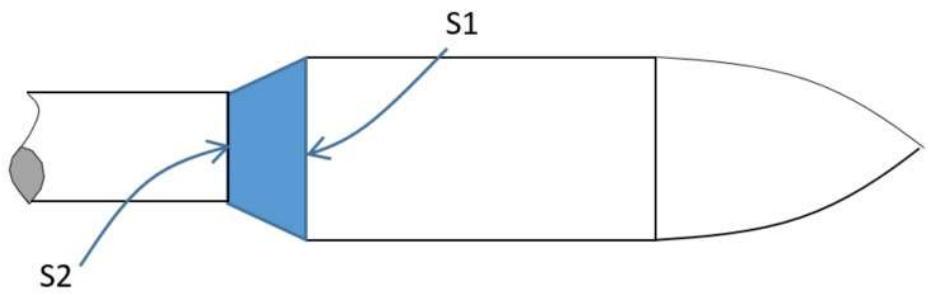

$$(C_{N\alpha})_{CB} = \frac{8}{\pi d^2}(S_2 - S_1)$$

Figure : Normal force coefficient of conical transition

S_1, S_2 = cross-sectional area, as indicated (in^2 or mm^2)

d = reference length = diameter at base of nosecone (in. or mm)

It is important to note that, for a conical transition, $S_2 < S_1$. As such, the value of $(C_{N\alpha})_B$ is negative, meaning the normal force acts in an opposite sense to a conical shoulder.

The expression for conical shoulder/conical transition can be simplified by incorporating the expressions for areas $S_1 = ¼ \pi d_1^2$ and $S_2 = ¼ \pi d_2^2$, giving:

$$(C_{N\alpha})_{CS} = (C_{N\alpha})_{CB} = \frac{2}{d^2}(d_2^2 - d_1^2)$$

3.3.7. Payload Bay

The 164mm payload bay will be located between the nosecone and main parachute bay. The nosecone will be secured to the payload bay with a bolted connection and the payload bay and main parachute bay coupler will be connected with 4-40 nylon shear pins. Additional shear pin holes will be added to the payload bay in order to hold the

payload in place during flight while still allowing it to deploy with the main parachute.

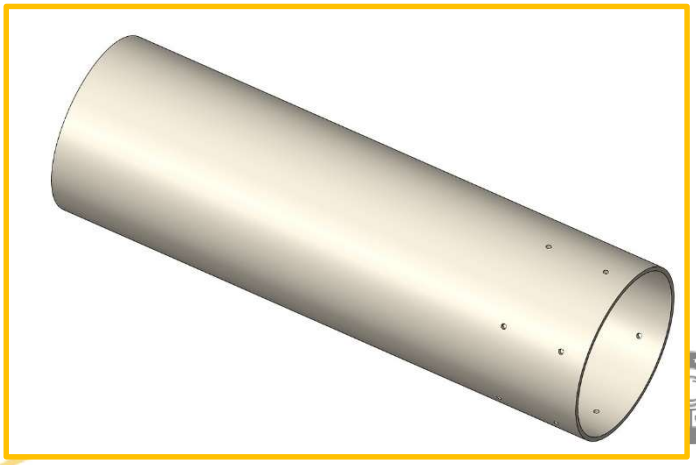

Figure : Payload bay

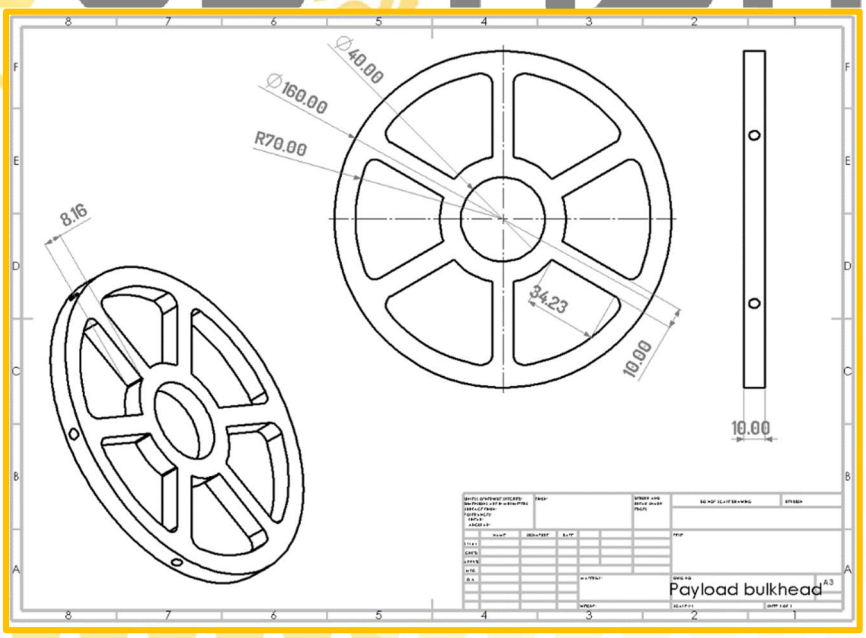

Figure : CAD Drawing of Payload Bulkhead

Table 9: Payload Bay Summary

Dimensions	Value
Length	55cm
Outer Diameter	16.8cm
Inner Diameter	16cm
Material	Cardboard

3.3.8. Motor Mount

In model rocketry, bulkheads and centering rings play crucial roles in securely holding the rocket motor and ensuring proper alignment and stability of the rocket. Here's a detailed overview of their functions and applications:

3.3.8.1. Thrust Plate/Bulkhead

Bulkheads are structural components used to close off the ends of the rocket's airframe sections. They can be made from various materials, including cardboard, plastic, or lightweight metal. Bulkhead often serve as mounting points for the rocket motor or engine mount. This ensures that the motor is securely positioned within the rocket body. Bulkheads are used to hold the motor mount in place within the rocket's airframe. They create a stable platform for the motor, ensuring it remains fixed during flight. In multi-stage rockets, bulkheads are used to separate stages and hold the staging mechanisms.

Bulkheads provide structural integrity by reinforcing the airframe and preventing it from collapsing or deforming under pressure. Bulkheads can separate different sections of the rocket, such as the body tube from the nose cone or the motor mount from the payload section.

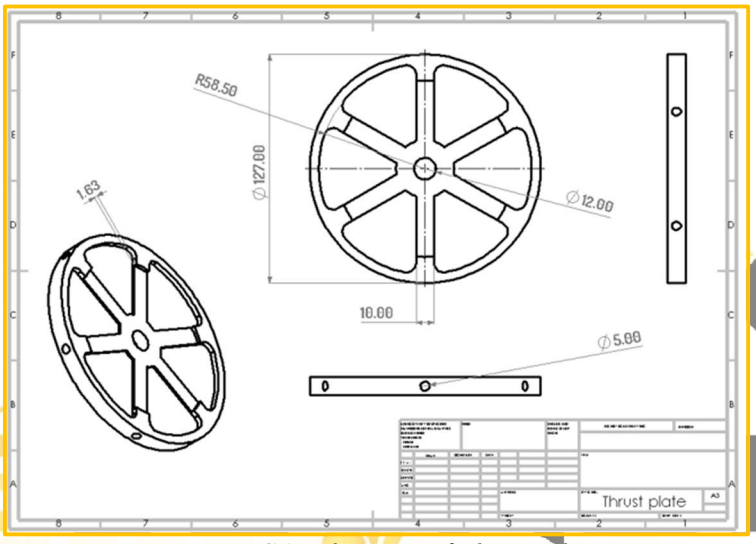

Figure : CAD drawing of Thrust Plate

Table 10: Thrust Plate summary

Thrust Plate Summary	
Material	Aluminium
Thickness	0.2 cm
Diameter	12.7 cm

3.3.8.2. Centering Rings

Centering Rings are circular rings that fit around the rocket motor or motor mount tube, centering it within the rocket's main airframe. They

are typically made of lightweight materials like cardboard or plastic. Centering rings are used in conjunction with the motor mount tube to keep it centred within the rocket's body tube. Centering rings are serving as mounting points for additional components, such as fin cans.

Centering rings ensure that the motor or motor mount is centred and aligned within the airframe, which is crucial for maintaining stable flight and preventing wobbling or veering off course. They distribute the load from the motor evenly across the airframe, reducing stress on any one part and improving overall stability.

In summary, bulkheads and centering rings are essential components in model rocketry that play key roles in mounting and aligning the rocket motor, contributing to the stability and performance of the rocket. Proper installation and reinforcement of these components are critical for a successful flight.

Table 11: Centering Rings Summary

Centering Rings Summary	
Material	MDF Sheet
Inner Diameter	7.5 cm
Outer Diameter	12.7 cm
Thickness	2 cm

3.3.9. Fin Can

The 243mm long fin can assembly houses the motor tube and the fins. The assembly consists of a forward bulkhead, two centering rings, the motor tube, and fins. The forward bulkhead and the aft centering ring will support most of the load from the motor while the middle centering ring is used primarily for motor tube and fin alignment. The fins will be designed with a fin slot that fits between the two centering rings for additional support.

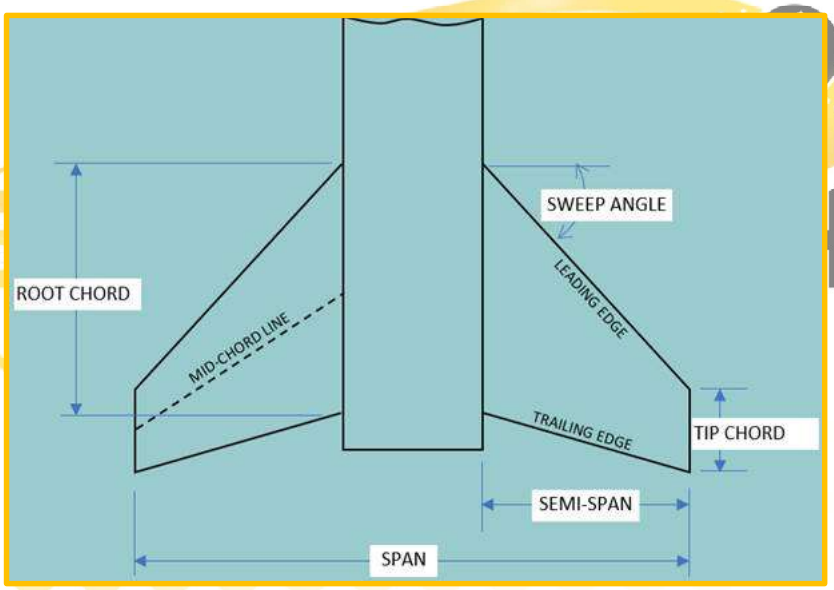

Figure : Fin Terminologies

3.3.9.1. Fin Configuration

While some rockets may use three or even five fins, four is a good balance between aerodynamic efficiency and ease of building. The team chose the four-fin configuration for the launch vehicle.

Using four fins in a model rocket provides stability during flight. our fins create symmetrical stability around the rocket's centerline. This ensures that air resistance is evenly distributed, keeping the rocket

flying straight. It ensures that even if one fin is slightly misaligned or damaged, the other three can still provide enough balance to minimize instability. It also counters added unstability due to addition of Transition coupling. Four fins provide control over all three axes of flight (yaw, pitch, and roll), enhancing the rocket's ability to self-correct during its ascent. Four fins help distribute drag forces more evenly around the rocket. This balanced drag helps prevent unwanted rotation and ensures a smoother, straighter ascent. Adding four fins can also reinforce the structural integrity of the rocket's body, especially when they are attached at strong joints. They can provide extra protection from stresses experienced during launch and flight. In windy or turbulent conditions, the extra fin improves the rocket's ability to resist the destabilizing effects of crosswinds.

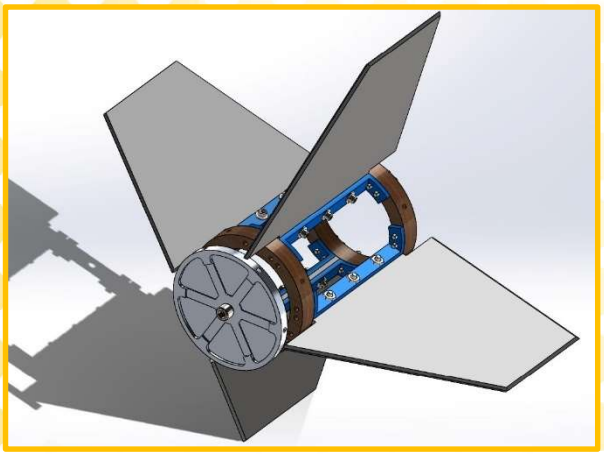

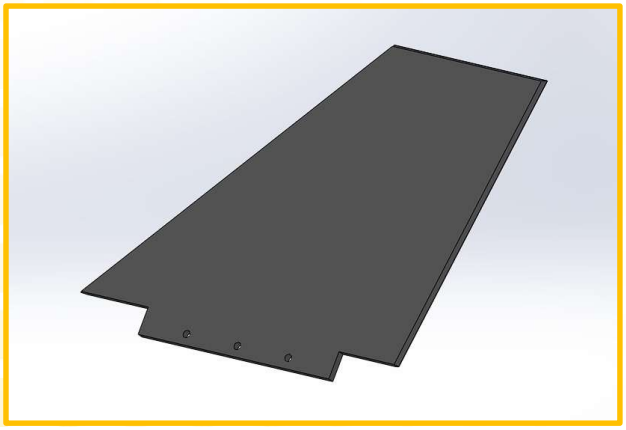

Figure : Fin Configuration

3.3.9.2. Fin Shape Analysis

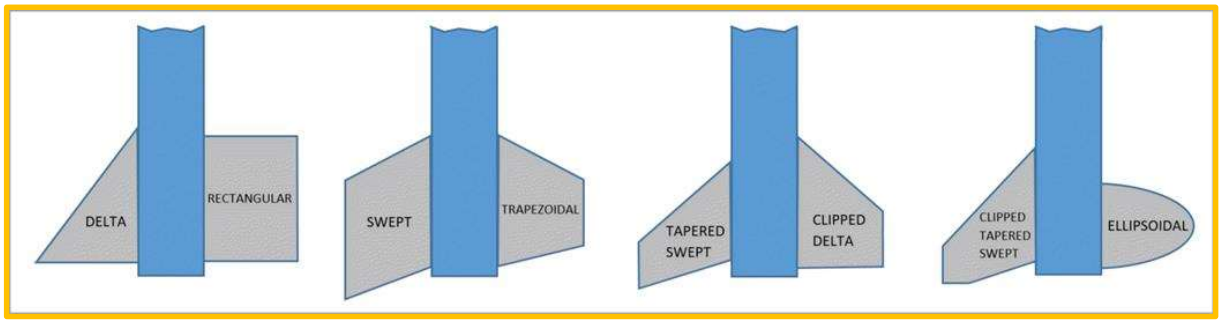

Figure : Fin Shapes

Table 12: Different Shapes of fins

Shape	Pros
Delta	Flutter resistant, a good choice for high-speed rocket
Rectangular	Simple to make, structurally robust, flutter resistant
Swept	Structurally robust, flutter resistant
Trapezoidal	Structurally robust, can be clipped to shift C.P. forward, flutter resistant
Tapered Swept	A good choice for high-speed flight, in particular for an upper stage, can be clipped to shift C.P. forward, flutter resistant
Clipped Delta	Structurally robust, can be clipped to shift C.P. forward
Ellipsoidal	Apparently, aerodynamically efficient, hardest to make, structurally robust, flutter resistant
Clipped Taper Swept	An improvement over Tapered swept, can be clipped to shift C.P. forward

In model rocketry, fin shape plays a crucial role in the stability and aerodynamic performance of the rocket. A tapered swept fin combines the characteristics of both tapering and sweeping, creating a sleek and efficient design.

Tapered fins are wider at the base and narrower toward the tip. This helps reduce drag, as the smaller surface area near the tip experiences less air resistance during flight. The larger surface area at the root of the fin provides a solid base for stability. Swept fins help delay flow separation from the rocket body, reducing turbulence and making the rocket more stable, especially during ascent. A tapered swept fin tends to provide greater overall stability compared to simple rectangular or straight fins, helping the rocket maintain a straight trajectory.

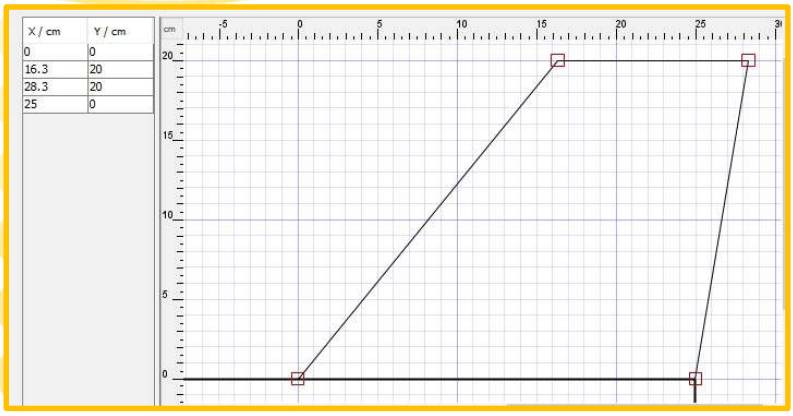

Figure: Dimensions of Fins

.

3.3.9.3. Fin Material Selection

When selecting materials for a model rocket's fins, it's important to consider factors like weight, strength, durability, ease of shaping, and aerodynamic performance.

Using fiberglass to reinforce MDF for rocket fins can improve its strength and durability. Fiberglass reinforcement is a good way to make MDF fins stronger and more durable for rockets that require better performance without the need for more expensive materials. Fiberglass reinforces the MDF, making it more impact-resistant and less prone to warping. MDF is relatively lightweight, and with fiberglass, you can achieve a strong yet light fin. It also provides a smooth surface that is ideal for aerodynamics, reducing drag.

Table 13: Fins Summary

Fins Summary	
Material	Fiberglass reinforced MDF sheet
Shape	Tapered Swept
Thickness	0.5cm
Mass	1.04 kg

Normal Force Coefficient for Fins

The expressions for normal force coefficient slope at α = 0 for fins is summarised below:

Where:

N = number of fins in finset (3, 4 or 6).

Theta (θ): mid-chord sweep angle

l: mid-chord length

Interference coefficient *f*,

f=1 for 3 or 4 fins

f=0.5 for 6 fins

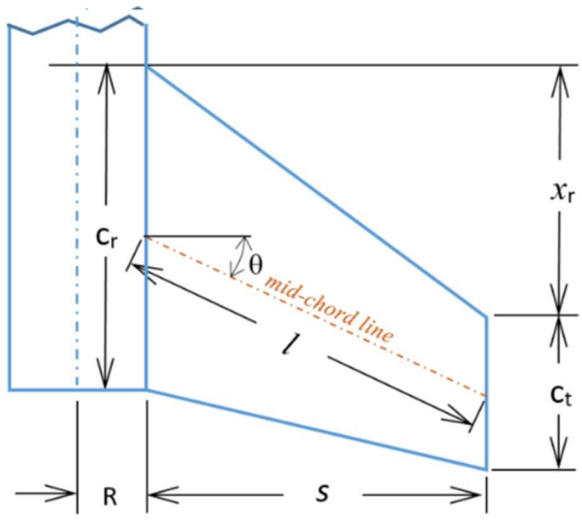

$$(C_{N\alpha})_F = \left(1 + \frac{fR}{s+R}\right)\left[\frac{4N\left(\frac{s}{d}\right)^2}{1+\sqrt{1+\left(\frac{2\,l}{c_r+c_t}\right)^2}}\right]$$

where

$$l = \frac{s}{\cos\,\theta}$$

$$\theta = \arctan\left[\frac{1}{s}\left(x_r + \frac{1}{2}(c_t - c_r)\right)\right]$$

Figure : Normal Force Coefficient for Fins

Location of Centre of Pressure for Fins

The expressions for the C.P. location of fins is summarized below:

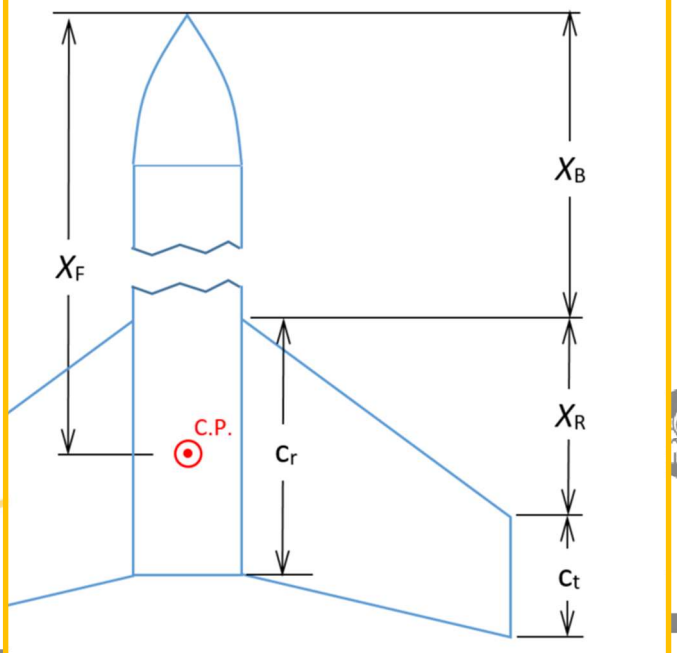

$$X_F = X_B + \frac{X_R}{3}\frac{(c_r + 2\,c_t)}{(c_r + c_t)} + \frac{1}{6}\left[(c_r + c_t) - \frac{(c_r\,c_t)}{(c_r + c_t)}\right]$$

Figure : Location of Centre of Pressure for Fins

Table 14: Fin Normal Force Coefficient Calculations

Fin Normal Force Coefficient Calculations	
N=	4
R=	62.5mm
S=	200.0mm
Cr	250.0mm
Ct	125.0mm
Xr	130.0mm
Xb	1500.0mm
Mid-chord sweep angle	0.3255 rad. (18.65 deg.)
Lf	211.1mm (length of fin mid-chord line)
(CN)f	11.757 per radian (Normal Force Coefficient, Fins)
Xf	1606.4mm (Distance along body to C.P. of Fins)

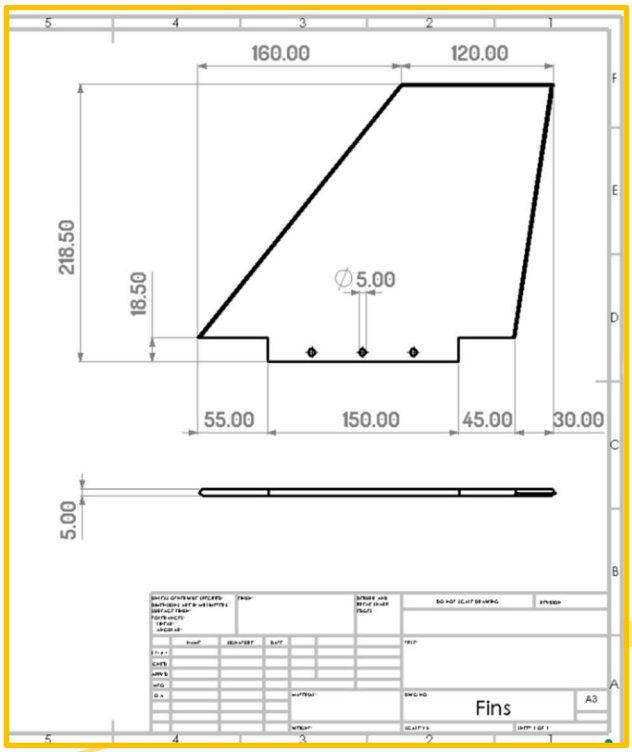

Figure : CAD Drawing of Fin

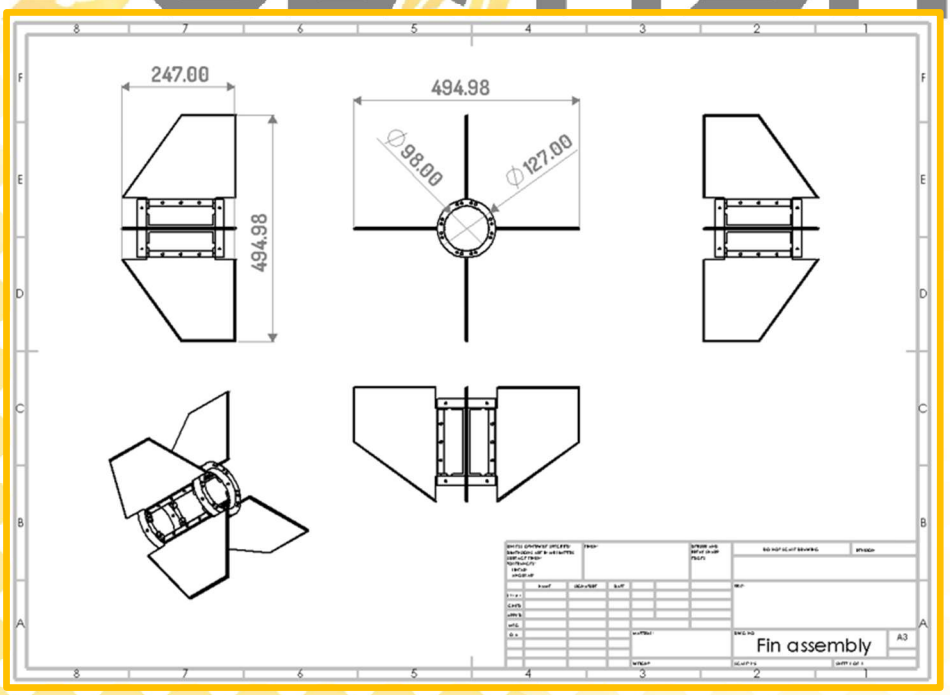

Figure : CAD Drawing of Fin Assembly

3.3.9.4. Fin Holder

Designing fin holders for a model rocket is crucial for ensuring stability and durability during flight. A slot is created in the airframe where the fin can slide in and be glued or fastened. sing aluminium for fin holders in model rockets can provide strength and durability while keeping weight relatively low.

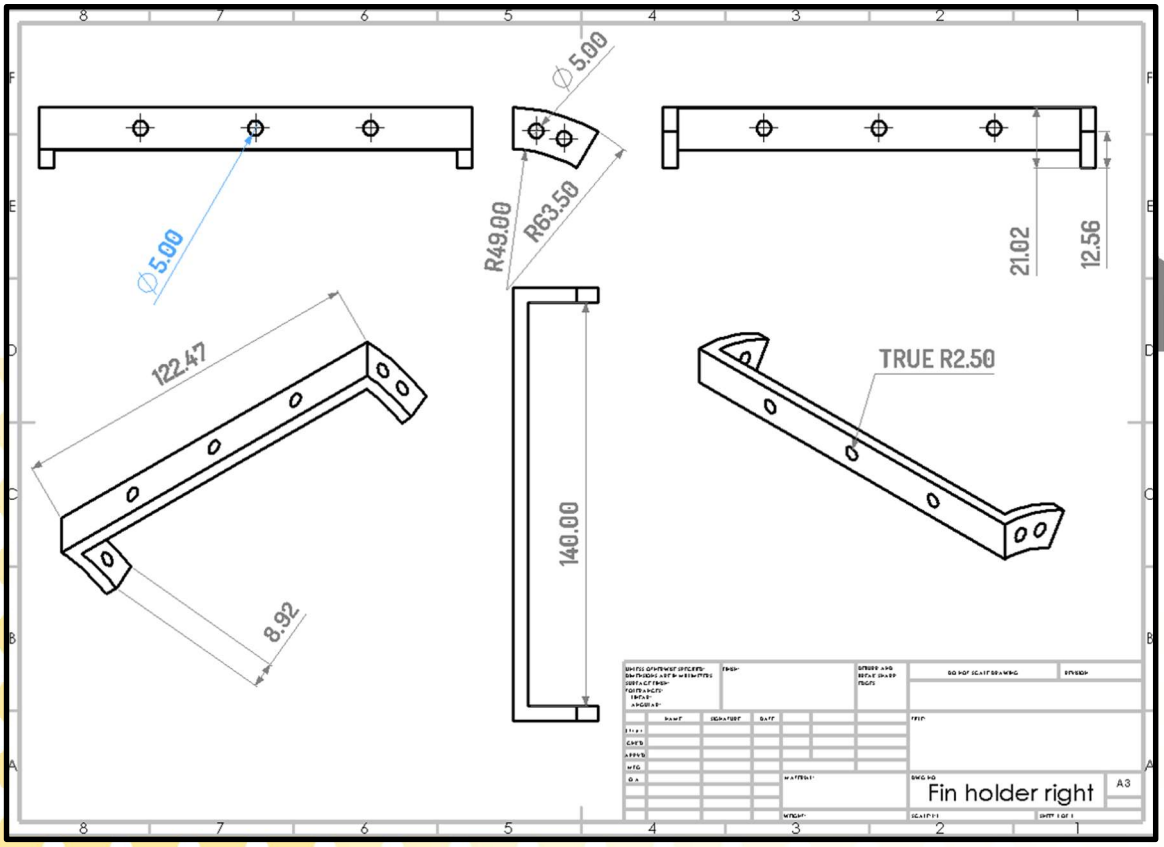

Figure : Fin Holder Right

3.3.10. Separation Actuators

In model rocketry, separation actuators are mechanisms designed to facilitate the separation of different stages of a rocket or to deploy payloads. There are various separation techniques such as Electromechanical Actuators, Pyrotechnic Actuators, Mechanical Actuators, Magnetic Separators etc. The team chose to use Pyrotechnic actuators. A pyro charge (or pyrotechnic device) is an explosive device used in spacecraft for separation events such as stage separations, payload releases, and deployment of systems like antennas or solar panels. Usually, an electric current triggers a small primer or squib. The squib ignites a pyrotechnic composition, which rapidly combusts. The energy released is channelled into a mechanical action. These devices often include fail-safes to ensure they do not trigger accidentally. Pyro charges are lightweight compared to other mechanical separation methods (like hydraulic or pneumatic systems), making them ideal for space applications where mass is critical.

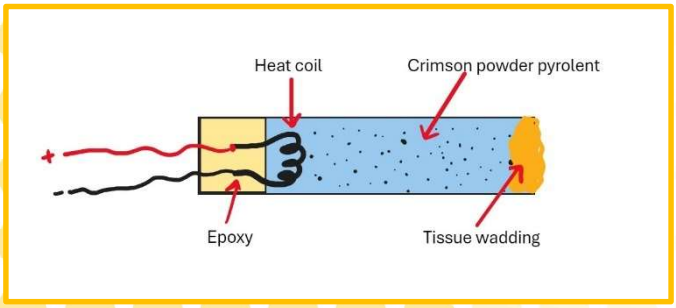

Figure : Pyrotechnic actuators

3.3.11. Boat Tail

In model rocketry, the boattail is a design feature that tapers down toward the rocket's engine. This aerodynamic shape helps reduce drag and improve stability during flight. The boattail can enhance performance by allowing smoother airflow around the rocket, especially at higher speeds.

Our team is creating a boattail for a model rocket using 1 mm thick aluminium which can provide both durability and a sleek aerodynamic profile.

Benefits of a Boattail

1. **Reduced Drag**: The primary function of a boattail is to reduce pressure drag at the rear of the rocket. By allowing for a gradual change in diameter, it minimizes turbulence and helps maintain smooth airflow.
2. **Improved Stability**: A well-designed boattail can enhance stability, particularly at high speeds. It can help prevent the rocket from experiencing oscillations or unwanted yaw.

Table 15: Boattail Summary

Boattail Summary						
Material	Length	Aft Diameter		Fore Diameter		Mass
		Outer	Inner	Outer	Inner	
Aluminium	3 m	10.1 cm	10 cm	13.4 cm	12.7 cm	0.08 kg

3.3.12. Rail Rings

In rocketry, rail rings (also known as rail buttons or rail guides) are small components attached to the body of a rocket to guide it along a launch rail during take-off. They serve as a guide mechanism to ensure the rocket stays stable and aligned with the rail until it reaches a high enough speed for aerodynamic stability.

Figure : Rail buttons

Rail rings help maintain the rocket's direction as it accelerates down the launch rail, preventing it from tipping or veering off course early in the flight. Once the rocket reaches sufficient velocity, the rail rings disengage from the rail as the rocket leaves the launchpad, allowing for a clean and stable ascent. It allows the rocket to stay aligned with the rail, compensating for any initial wind gusts that might otherwise destabilize it before achieving full flight speed.

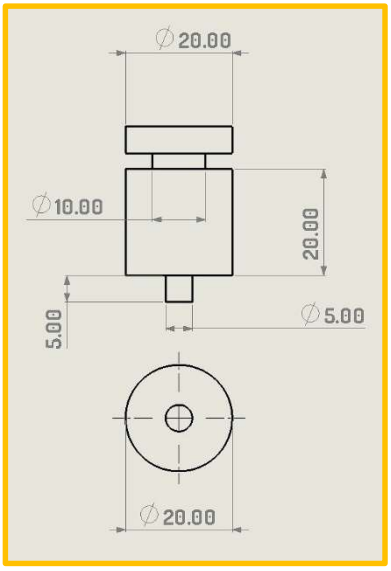

Figure : Dimensions of Rail Buttons

3.5. Propulsion System Design

3.5.1. Motor Selection

A study was performed in order to determine the optimal motor for the launch vehicle. For selection of most appropriate motor as per competition requirements we have analysed the specifications of our motor and reached at the conclusion that the following specifications will be most appropriate for or model rocket design.

Table 16: Motor Study Results as per simulation and research

Criteria	Specification
Max Apogee(m)	1014 m
Min Apogee(m)	957m
Mass of motor (Launch Mass)	2.83kg
Motor Mass (Empty Mass)	1.95 kg
Diameter	75mm
Length	240 mm
Impulse	1848 Ns

Motor Burn Time	3.97s
Max Thrust	661 N
Avg. Thrust	464 N
Propellent	Blue Baboon

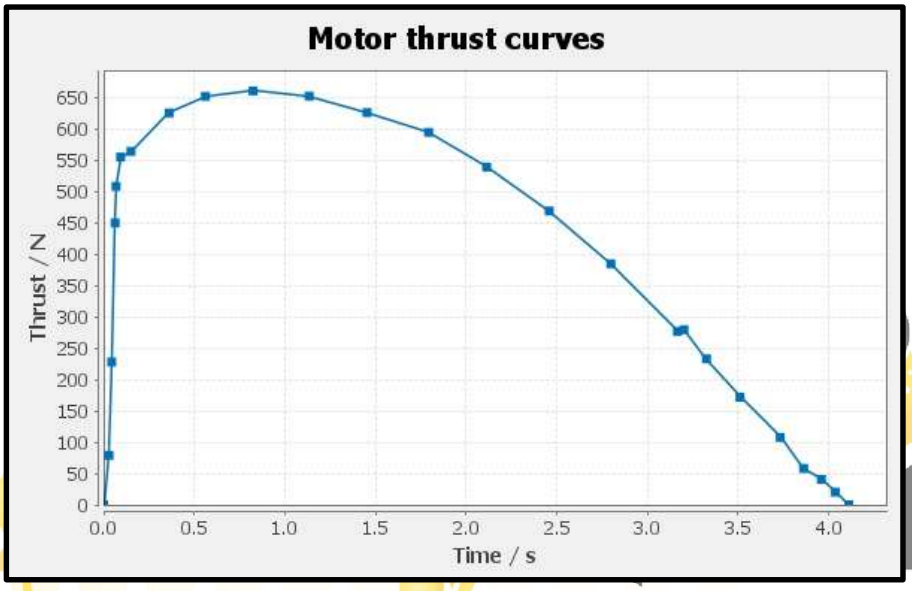

Figure : Motor Thrust Curves

3.5.3. Thrust Weight Ratio of Rocket

After calculating various motor options, we have selected Type-1 as the most suitable motor for our rocket.

Average Thrust (motor): 464 N

Mass of Rocket with motor: 9.64kg

Formula:

$$\frac{\text{Thrust}}{\text{Weight}} = \frac{\text{Thrust}}{\text{Mass} \times \text{Gravity}}$$

$$\frac{\text{Thrust}}{\text{Weight}} = \frac{464\ \text{N}}{9.64\text{kg} \times 9.8\ {}^{\text{m}}/_{\text{s}}}$$

$$\frac{\text{Thrust}}{\text{Weight}} = 4.9 : 1$$

3.5.2. Motor Retention

The motor retention system houses the motor and is assembled from the motor mount, centre rings, and fins. Three centre rings will connect the motor mount and fin can. This keeps the motor centered in the vehicle and transfers the thrust load to the airframe of the vehicle. The inner and outer diameter of the centering rings were determined by the diameters of the motor mount and the fin can, respectively. The CAD drawings of the centering rings and Thrust Plate is shown below:

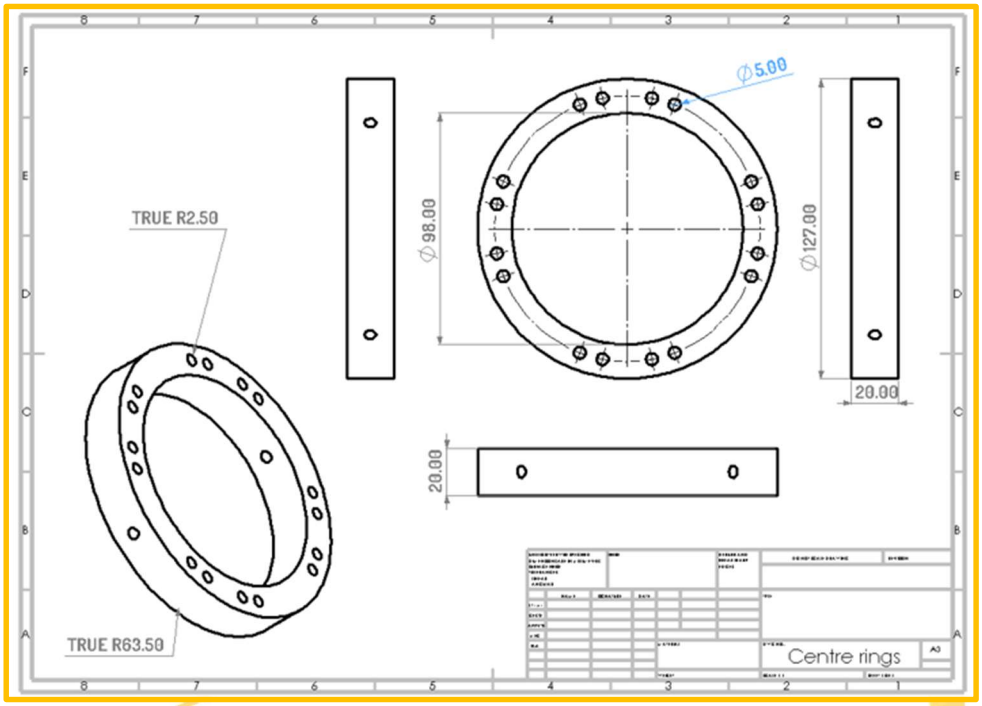

Figure : Centering Rings CAD drawing

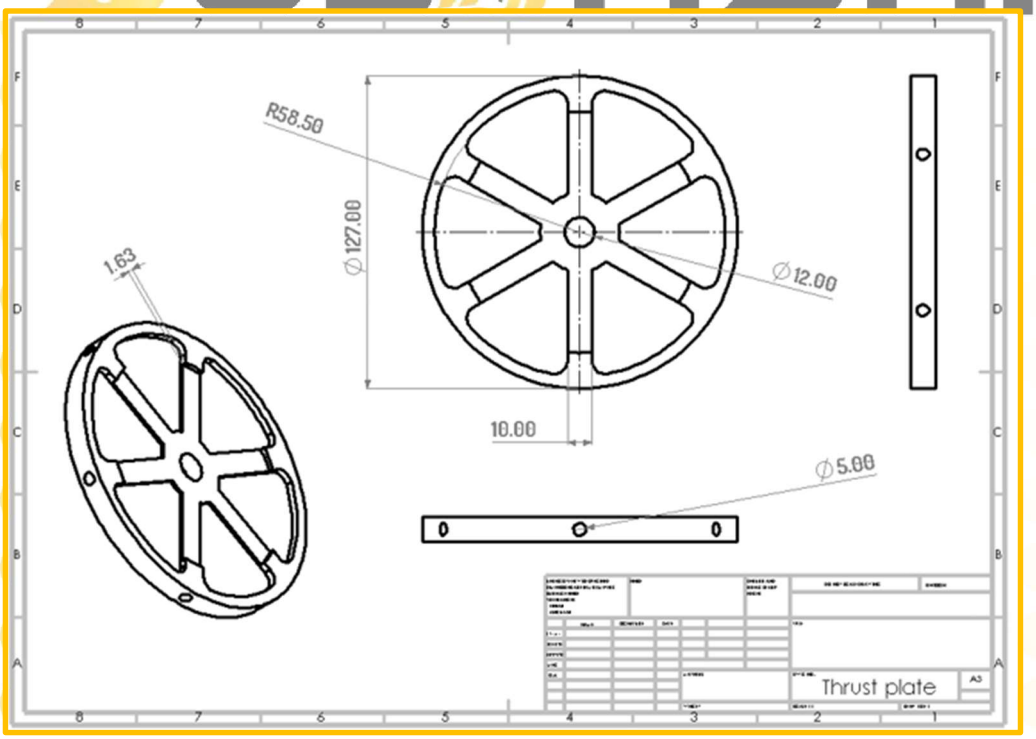

Figure : Thrust Plate CAD drawing

4. Payload Criteria

4.1. Payload Objective

The objective of the payload mission is to design and construct a CAN-Sized satellite of diameter 0.15m and length 0.40m, with a weight of 1Kg +/-0.05Kg. The CANSAT (Payload) must be separated and deployed at the defined altitude (1000m +/- 100m). The Rocket body and the CANSAT shall return safely to the ground by means of safe landing, using deployable parachutes. The CANSAT shall contain an altimeter and an accelerometer that will measure the altitude and acceleration levels reached by the vehicle. This data shall be obtained by the team.

4.2. Payload Success Criteria

Table 17: Payload Success Criteria

Success Level	Payload Aspect
Complete Success	• Payload is recoverable • Payload is undamaged during deployment and after landing • Payload is separated at defined altitude (1000m +/- 100m) • Data is obtained
Partial Success	• Payload is recoverable • Payload is undamaged during deployment and after landing • Payload is separated at defined altitude (1000m +/- 100m) • No data is obtained
Partial Failure	• Payload is recoverable • Unsuccessful descent of Payload • No data is obtained

Complete Failure	• Payload is unrecoverable • Unsuccessful descent of Payload • No data is obtained

4.3. Payload Design

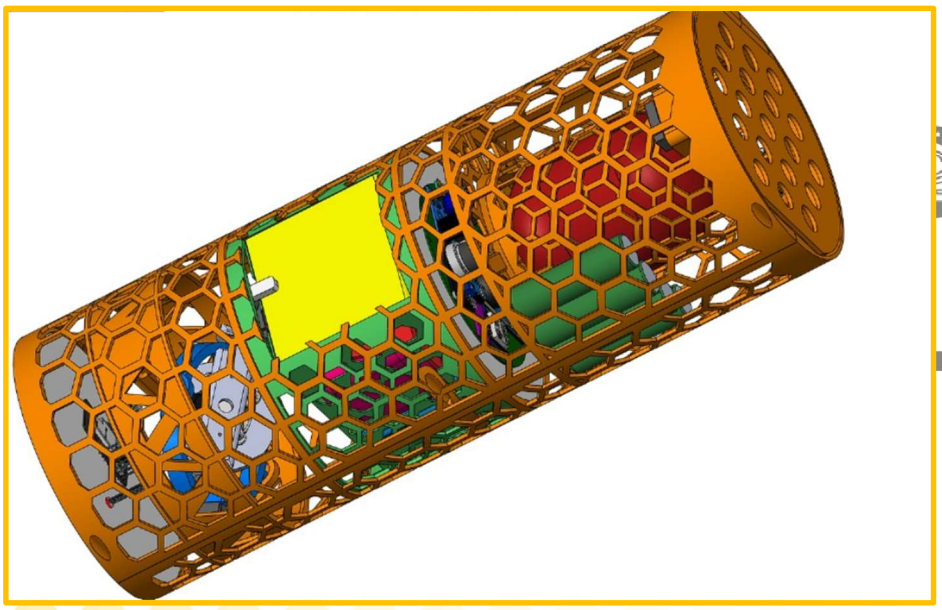

Figure : CANSAT Design Configuration 1

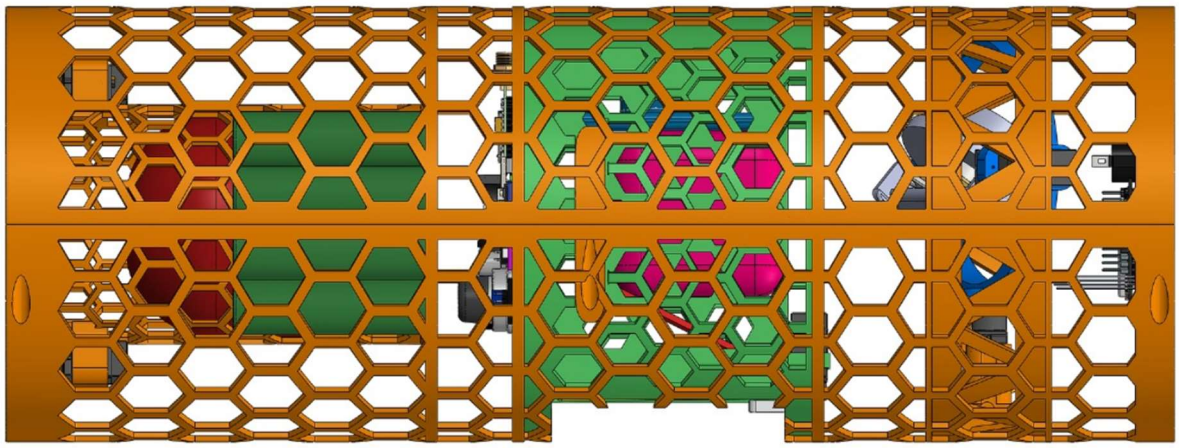

Figure : CANSAT Designs Configuration 2

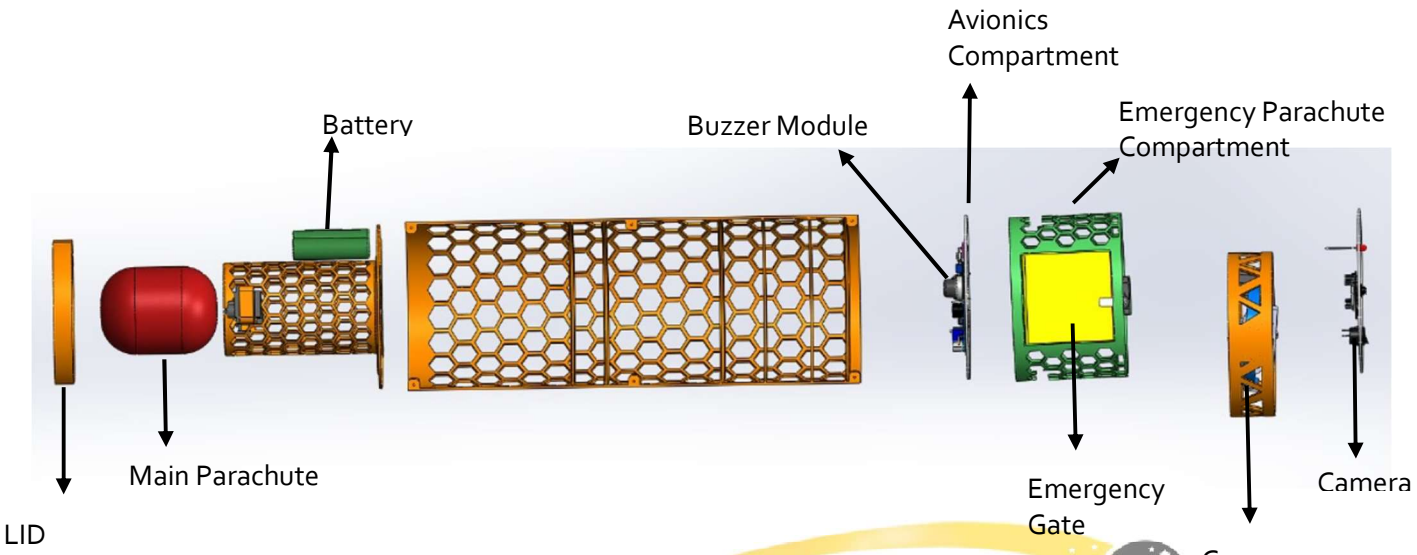

Figure : CANSAT Design Configuration 3

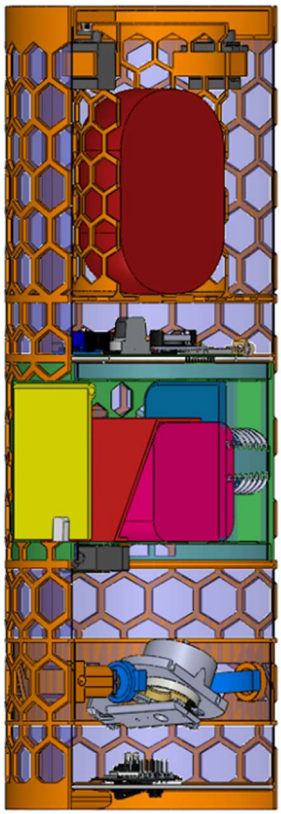

Figure : CanSat Tilt Cut view

5. Subsystem Details

5.1. Payload Subsystem

5.1.1. Planned Experiments

5.1.2. Payload Recovery

5.1.2.1. Primary Parachute (Drogue)

5.1.2.2. Main Parachute

5.1.2.3. Emergency Parachute

5.2. Communication And Data Handling Subsystem

5.2.1. SIM800L

The SIM800L is a GSM/GPRS module commonly used for enabling cellular communication in various projects, including remote monitoring, SMS functionality, and IoT applications.

- **GSM/GPRS Capabilities**: Supports various GSM bands (850/900/1800/1900 MHz) for voice and data communication.
- **Data Communication**: Can send and receive SMS, make and receive calls, and connect to the internet via GPRS.
- **Small Form Factor**: Compact design suitable for embedding in small projects.
- **Power Requirements**: Typically requires a voltage of 3.4V to 4.4V, with a peak current of around 2A during transmission.
- **UART Communication**: Communicates with microcontrollers via a serial (UART) interface.

Figure :SIM800L

Integration in Model Rocketry:

- **Telemetry**: Using the SIM800L to send telemetry data (e.g., altitude, temperature, etc.) to a remote server or smartphone via SMS or HTTP.
- **Flight Status Updates**: Send real-time status updates during flight, such as when the rocket reaches apogee or deploys the recovery system.
- **Remote Control**: Implement remote control functionality to manage deployment mechanisms based on received commands.

5.2.2. Xbee Pro S3B

The Xbee Pro S3B, a high-performance RF module is a great option for model rocketry applications, particularly for long-range communication.

Table : Specifications of Xbee Pro S3B

Specifications:	
Communication Protocol:	ZigBee protocol
Frequency Bands:	900 MHz to 928 MHz
Range:	14 km or more than 30 km (using high gain antenna)
Data Rate:	250 kbps
Power Supply Voltage:	3.3 V
Power Consumption:	• Sleep Mode: < 10 µA • Transmit: ~40 mA (at 30 dBm) • Receive: ~20 mA

Modulation:	DSSS (Direct Sequence Spread Spectrum)
Size:	Approximately 32 x 25 mm
Form Factor:	PCB mountable module

Data Transmission Mechanism

1. **Ground Station (Base)**

- **XBee PRO S3B Transceiver**: This transmits and receives data between the ground and the rocket.
- **Antenna**: Increases the range and signal strength of the communication.
- **Computer/Controller**: Interface where data from the rocket is processed (e.g., trajectory data, altitude).
- **Software (GUI)**: Allows real-time monitoring of telemetry data from the rocket (e.g., ground control software like LabVIEW, Python scripts, or custom software).

2. **Rocket System**

- **XBee PRO S3B Transceiver**: Similar to the one in the ground station but mounted on the rocket. It sends telemetry data back to the ground.
- **Flight Computer** : Collects and processes data from sensors (GPS, accelerometer, etc.) and sends it through the XBee module.
- **Power Supply**: A battery or power source to supply the electronics inside the rocket.
- **Antenna**: Helps maintain a strong signal between the rocket and the ground.

3. Telemetry System

- **Sensors**: Collect data like altitude, speed, orientation, and GPS location, and send it to the flight computer.
- **XBee Communication Protocol**: XBee modules communicate wirelessly using the ZigBee protocol, forming a wireless mesh network for reliable and long-range communication.

(Wireless RF communication via ZigBee)

Ground Station

-XBee PRO S3B Transceiver

-Antenna

-PC/Control Interface

Rocket

-XBee PRO S3B Transceiver

-Antenna

-Sensor Inputs (GPS, Altitude, Accelerometer, etc.)

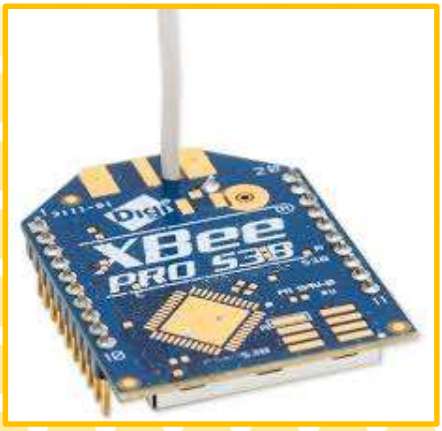

Figure : Xbee Pro S3B

Using the XBee Pro 3B for model rocketry offers several advantages that make it a great choice for wireless communication in this application:

- The XBee Pro S3B can achieve ranges up to 10 miles in open areas, making it suitable for tracking rockets during ascent and descent.
- The XBee Pro S3B is designed for low power usage, which is crucial for battery-operated rocket payloads.
- Capable of sending telemetry data (altitude, speed, etc.) back to a ground station, enhancing situational awareness during the flight.
- Can trigger actions based on sensor data, such as deploying recovery systems when certain thresholds are reached.

5.3. Electrical Components Subsystems

Below is a detailed overview of key electrical components used in rocketry, including the INA219 voltage/current sensor, Arduino Nano BLE Sense Rev2 microcontroller, and other relevant sensors.

5.3.1. INA219 Voltage/Current Sensors

Table : Specifications of INA219 Voltage/Current Sensor

Specifications				
Type	Measurement Range	Accuracy	Power Supply	Communication
High-side Current/Voltage Sensor	Voltage: Up to 26V Current:	Voltage: ±1%	3.0V to 5.5V	I2C Interface

	Up to ±3.2A	Current: ±1%		

1. **High Accuracy:** Provides accurate voltage and current readings, which are crucial for monitoring power consumption and ensuring efficient use of energy in the rocket's systems.
2. **High-Side Measurement**: Measures current on the high side of the load, which is beneficial for accurate power monitoring without affecting the ground path.
3. **Wide Measurement Range**: Capable of measuring a broad range of voltages and currents, accommodating different power needs of the rocket's subsystems.
4. **Low Power Consumption:** The sensor itself consumes minimal power, which helps in preserving the rocket's battery life.
5. **2C Interface:** The I2C communication protocol simplifies integration with the microcontroller and other systems.

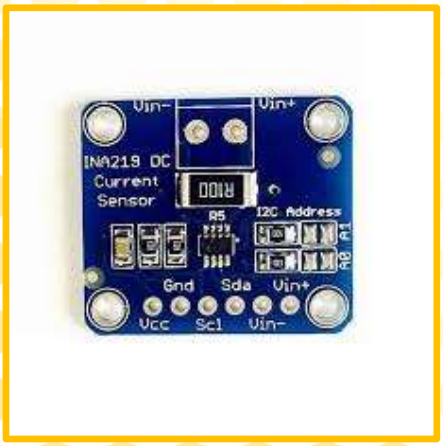

Figure : INA219 Sensor

Rational for Choosing INA219

INA219 Rationale:

- **Power Monitoring**: The INA219 provides accurate voltage and current measurements, which are essential for monitoring the rocket's power consumption and ensuring efficient energy use.
- **Integration**: The I2C interface simplifies integration with the ATmega2560, allowing for seamless data acquisition and processing.
- **Cost-Effective**: Offers high accuracy and versatility at a reasonable cost, making it a suitable choice for budget-conscious rocketry projects.

5.3.2. FPV Camera

An FPV (First-Person View) camera for model rocketry allows real-time video transmission from the rocket during flight, providing an immersive perspective from the rocket's point of view. It is commonly used for visual tracking, flight analysis, and creating engaging footage of the launch and flight. The **Runcam Thumb FPV camera** is a compact and lightweight camera designed for first-person view (FPV) applications.

Figure : Runcam Thumb FPV camera

It's super light coming in at just under 10 grams, can be powered externally, and supports a micro-SD card for ultra-long recording time. This camera has an onboard gyro sensor so the footage can be stabilized with Gyro flow. It enhances the rocketry experience by allowing real-time visual tracking and helps capture smooth footage during fast motion.

Table :Features of Runcam Thumb Camera

Features	
Resolution	1080p 60FPS
Support	Micro SD Card Capacity 128G Max
Communication Interface	Micro USB
Power Consumption	At 5V, 200mA when standby, 280mA when recording
Video Bitrate	20Mbps
Dimensions	52mm*13mm*19mm
Weight	9.8g
Gyro	Built-in
Video Format	MP4

5.3.5. SD Card Module

An SD card module in model rocketry is often used to store flight data from onboard sensors during the rocket's flight. It is typically part of the flight computer setup, which logs telemetry data such as altitude, velocity, acceleration, GPS coordinates, and other relevant metrics during the rocket's mission.

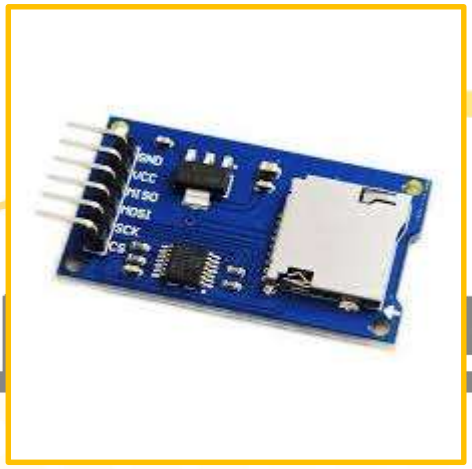

Figure : SD Card Module

SANDISK 8gb SD Card:

- 8GB SanDisk SD card in model rocketry can be an effective way to record flight data or capture video footage from onboard cameras.
- Compact and Lightweight
- Cost-Effective
- High Data Transfer Speeds
- SanDisk SD cards come with features like Error Correction Code (ECC), which helps prevent data corruption.

5.3.4.18650 Batteries

The 18650 battery's high energy density, reliability, and versatility make it a top choice for model rocketry. 18650 batteries are commonly used to power onboard electronics, such as altimeters, GPS systems, and telemetry transmitters, which provide real-time data during flight. They are also employed in rocket ignition systems, providing the necessary energy to ignite solid or hybrid propellants reliably.

Figure : 18650 Lithium Ion Battery Cell

These batteries maintain stable voltage and performance under high discharge rates, essential for powering flight control systems, telemetry devices, and other electronics during launch and flight. Their cylindrical shape makes them easy to integrate into various designs, enabling efficient use of space within the rocket's body and their compact size and high energy capacity of 18650 batteries allow them to provide substantial power without adding significant weight.

Table : Specifications of 18650 Lithium Ion Battery Cell

Specifications of *18650 Lithium-Ion Battery Cell*	
Dimensions	18mm diameter, 65mm length
Typical Capacity	1800mAh to 3500mAh, depending on the specific cell.
Nominal Voltage	3.6V to 3.7V
Charge Voltage	4.2 V
Discharge Voltage	Minimum 2.5V to 3.0V (depending on the cell)

5.3. Sensor Subsystem

5.3.5. Arduino Nano 33 BLE Sense Rec2 ABX00069

The Arduino Nano BLE Sense Rev2 is a powerful and compact microcontroller board designed for various projects, including those involving sensors, connectivity, and low-power applications.

Table : Specifications of Arduino Nano 33 BLE Sense Rec2 ABX00069

Specifications:	
Processor	nRF52840
Microcontroller	nRF52840
Security	ECC608 crypto chip
Memory	• Flash Memory: 1 mb • RAM: 256 kb
Circuit Voltage	3.3 V
Capabilities	Digital Microphone 6-axis accelerometer Pressure Humidity Temperature Colour Sensing Gesture Recognition

The Arduino Nano 33 BLE Sense Rev2 (ABX00069) includes a variety of sensors and capabilities that can be used for different applications such as sound detection, environmental monitoring, and motion sensing.

Utilisations of these Sensors:

- **Digital Microphone (MP34DT05-A)**

The onboard digital microphone captures sound waves and converts them into digital signals, which can be processed to measure sound intensity or detect events.

Table: Specification of Digital MEMS Microphone

Type	Digital MEMS Microphone
Frequency Range	100 Hz to 10 kHz
Sensitivity	-26 dB ± 3 dB
Dynamic Range	63 dB
Max SPL (Sound Pressure Level)	120 dB
Resolution	16 bits

Communication: Pulse Density Modulation (PDM), which requires conversion to PCM (Pulse Code Modulation) using the PDM Arduino library for data processing.

- **6-Axis Accelerometer (LSM9DS1)**

The accelerometer measures the linear acceleration in 3D space (X, Y, Z). The 6-axis combo includes both the accelerometer and gyroscope.

Figure: Specifications of 6-Axis Accelerometer (LSM9DS1)

Type	3-axis accelerometer and 3-axis gyroscope
Accelerometer Range	±2g, ±4g, ±8g, ±16g
Gyroscope Range	±245 dps, ±500 dps, ±2000 dps
Sensitivity	Accelerometer: 0.061 mg/digit at ±2g Gyroscope: 0.00875 dps/digit at ±245 dps
Sampling Rate	Up to 952 Hz

Communication: Uses I²C/SPI to communicate with the Arduino. The library Arduino LSM9DS1 simplifies access to the data.

- **Pressure Sensor (LPS22HB)**

  Measures barometric pressure, which is used to calculate altitude. In rocketry, pressure changes can be used to estimate the altitude during flight.

  As pressure decreases with altitude, you can estimate the rocket's altitude during flight.

Figure: Specifications Pressure Sensor (LPS22HB)

Type	MEMS barometric pressure sensor
Range	260 to 1260 hPa (hectopascal)
Accuracy	±0.1 hPa
Resolution	0.01 hPa
Sampling Rate	1 Hz to 75 Hz

Communication: Uses I²C protocol to communicate with the Arduino. The Arduino_LPS22HB library provides easy access to the pressure data.

Altitude Calculation:

Pressure drops with altitude, so using the barometric sensor, you can calculate altitude during the rocket's ascent.

Formula:

$$\text{Altitude (m)} = 44330 \times (1 - (P/P')^{(1/5.255)})$$

where:

- P is the measured pressure (in hPa)
- P' is the standard atmospheric pressure at sea level (1013.25 hPa)
- The result is in meters

- **Humidity Sensor (HTS221)**

  Measures the relative humidity of the environment. This sensor is useful for environmental monitoring during a rocket launch or weather experiments.

  Track humidity changes during flight or in weather applications.

  Use humidity data to adapt the rocket's components to different environmental conditions.

Figure: Specifications of humidity sensor (HTS221)

Type	Capacitive humidity sensor
Range	0 to 100% relative humidity (RH)
Accuracy	±3.5% RH
Resolution	0.003% RH
Operating Range	-40°C to 120°C

Communication: Uses I²C protocol, accessed through the Arduino_HTS221 library.

- **Temperature Sensor (HTS221)**

The same HTS221 chip also includes a temperature sensor. Monitoring temperature is useful in both flight conditions and weather applications.

Figure: Specifications of temperature sensor (HTS221)

Type	Integrated into the HTS221 humidity sensor
Range	-40°C to 120°C
Accuracy	±0.5°C between 15°C and 40°C
Resolution	0.016°C

Communication: Uses I²C protocol, available through the same Arduino_HTS221 library as the humidity sensor.

- **Proximity, light, colour, and gesture sensor (APDS-9960)** could be used for various functions, such as detecting proximity events or measuring ambient light for analysis.

5.4.2. GNSS Sensor

The Bharat NavIC GPS GNSS sensor is designed for satellite-based navigation in India and surrounding regions. NavIC, or Navigation with Indian Constellation, is India's autonomous satellite navigation system, developed by ISRO. It offers accurate positioning services to users in India and neighbouring regions.

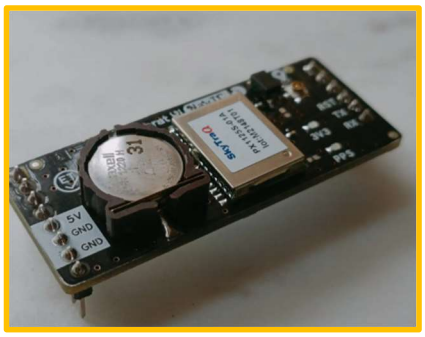

Figure : Bharat NavIC GPS GNSS sensor

General Specifications:

- Satellite System:
  - NavIC (Indian Regional Navigation Satellite System), also known as IRNSS.
  - Supported Satellite Systems:
    - NavIC (primary)
    - GPS (Global Positioning System)
    - GLONASS (Russian satellite system)
    - Galileo (European satellite system)
    - BeiDou (Chinese satellite system), depending on module support.
  - Multi-constellation support: Improves positioning accuracy by using multiple satellite systems simultaneously.
- Frequency Bands:
  - L5 Band (1.17645 GHz): Primary frequency band used by NavIC for civilian services.
  - S-Band (2.492 GHz): Provides more accurate positioning (for select applications).

- L1 Band (1.57542 GHz): Used for GPS signals for backward compatibility.
- Dual-Frequency Support: Helps in improving accuracy and reducing ionospheric delay issues.

- Positioning Accuracy:
  - Horizontal Accuracy: Less than 5 meters (CEP 50) under standard conditions.
  - Vertical Accuracy: Less than 10 meters (CEP 50) depending on signal conditions and satellite visibility.
  - Velocity Accuracy: 0.05 m/s (2D) under optimal conditions.
- Time to First Fix (TTFF):
  - Cold Start: Typically 30-40 seconds.
  - Warm Start: Less than 20 seconds.
  - Hot Start: 1-2 seconds (if previously locked to satellite).
- Sensitivity:
  - Tracking Sensitivity: Better than -160 dBm.
  - Acquisition Sensitivity: Better than -146 dBm.
- Frequency Bands:
  - L5 Band (1.17645 GHz): Primary frequency band used by NavIC for civilian services.
  - S-Band (2.492 GHz): Provides more accurate positioning (for select applications)
  - L1 Band (1.57542 GHz): Used for GPS signals for backward compatibility.
  - Dual-Frequency Support: Helps in improving accuracy and reducing ionospheric delay issues.

- Positioning Accuracy:
  - Horizontal Accuracy: Less than 5 meters (CEP 50) under standard conditions.
  - Vertical Accuracy: Less than 10 meters (CEP 50) depending on signal conditions and satellite visibility.
  - Velocity Accuracy: 0.05 m/s (2D) under optimal conditions.
- Time to First Fix (TTFF):
  - Cold Start: Typically 30-40 seconds.
  - Warm Start: Less than 20 seconds.
  - Hot Start: 1-2 seconds (if previously locked to satellite).
- Sensitivity:
  - Tracking Sensitivity: Better than -160 dBm.
  - Acquisition Sensitivity: Better than -146 dBm.

Electrical Specifications:

- Input Voltage:
  - 3.3V to 5V operating voltage depending on the specific module (check datasheet of module used).
  - Typically powered through a microcontroller's power rail or an external power supply.
- Power Consumption:
  - Active Mode: < 40 mA (varies depending on the number of satellites and processing required).
  - Sleep Mode: < 10 mA, for power-constrained applications.
  - Power-efficient modes for battery-powered applications.
- Backup Battery:

- Integrated RTC (Real-Time Clock) with a backup battery, allowing for faster hot starts and time retention during power-off states.

Communication Protocols:

- Communication Interfaces:
  - UART: Typically 9600 to 115200 baud rate, supports NMEA (National Marine Electronics Association) sentences.
  - I2C: Optional, depending on module configuration.
  - SPI: Optional, depending on the specific module.
- Data Output:
  - NMEA Sentences: Standard format for GPS data output, such as $GPGGA, $GPGLL, $GPGSV, $GPRMC.
    - Provides latitude, longitude, altitude, UTC time, speed, number of visible satellites, etc.
  - UBX Protocol: Some modules support UBX protocol for custom data fields and configuration.

Environmental Specifications:

- Operating Temperature:
  - -40°C to +85°C: Suitable for outdoor, aerospace, and harsh environmental conditions.
- Humidity:
  - Supports up to 95% non-condensing for rugged applications.
- Altitude Range:
  - Maximum Altitude: Typically up to 50,000 meters (164,000 feet) with precision degradation.

- High-speed tracking: Able to operate at speeds up to 515 m/s (~1,850 km/h).

Antenna Requirements:

- External Antenna:
  - Typically uses an active external antenna with a gain of 20-30 dB for improved reception in weak signal conditions.
  - Supports standard GPS patch antennas (ceramic, helical, or microstrip antennas).
- Antenna Impedance:
  - Standard 50 Ohm antenna impedance.
- Connector Types:
  - u.FL, SMA, or MCX connectors depending on the specific module

Table : Technical Specifications of GNSS sensor

Receiver Type	NavIC L5, GAGAN/GPS L1 C/A code Phoenix engine
Accuracy	Position – 2.5m CEP Velocity 0.1 m/s Time – 12 ns
Startup Time	~1 s hot start <30 s cold start
Multi-path Mitigation	Better than -145/-144dBm GPS/ NavIC cold-start

	Better than -154/-153dBm GPS/ NavIC hot-start Better than -154/-154dBm GPS/ NavIC reacquisition Better than -165/-156dBm GPS/ NavIC tracking
A-GPS	7-day server-based A-GPS Self-aided ephemeris estimation
Update Rate	1 / 2 / 4 / 5 / 10 Hz, default 1Hz
Dynamics	4G (39.2m/s) acceleration
Operational Limits	Altitude<80,000m and velocity<515m/s, not exceeding both
Serial Interface	3.3V LVTTL level UART, selectable 4800~11520 baud rate
Protocol	NMEA-0183 V3.01, SkyTraq binary, 115200 baud, 8, N, 1
Datum	Default WGS-84, User definable
Input Voltage	3.3V DC +/- 10%
Current Consumption	80mA acquisition, 60mA tracking
Dimension	Width: 12.2mm Length:16.0mm Height: 2.9mm
Operating Temperature	-40 °C ~ +85 °C
Storage Temperature	-55 °C ~ +100 °C
Humidity	5% ~ 95%

Use Cases:

Rocketry: Provides real-time altitude, velocity, and positioning data during rocket ascent and descent.

Aerospace Applications: High-altitude GPS for UAVs, drones, and weather balloons.

Automotive Navigation: Used in cars for precise navigation, especially in remote areas where only NavIC signals may be available.

5.4.3. BMP280 Sensor

The BMP280 is a barometric pressure sensor from Bosch Sensortec, used for accurate measurements of atmospheric pressure and temperature. It is widely used in weather monitoring, altimetry, and IoT applications.

Features:

1. **Barometric Pressure Measurement**:
   a. Measures the absolute atmospheric pressure in a given

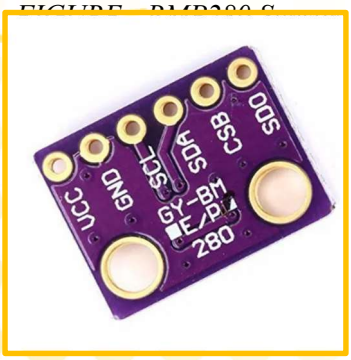

   environment.
   b. Can be used to calculate altitude by comparing sea-level atmospheric pressure with the measured atmospheric pressure.
2. **Temperature Measurement**: Accurate temperature measurement to complement pressure readings.

3. **Altitude Calculation**: The sensor provides real-time altitude data by utilizing the barometric pressure and a known pressure at sea level.

Specifications:

Pressure Measurement:

1. **Pressure Range**: 300 hPa to 1100 hPa (equivalent to approximately 9000 meters to 500 meters relative to sea level).
2. **Relative Accuracy**: ±0.12 hPa (equivalent to ±1 meter altitude) in the range of 700 to 900 hPa.
3. **Absolute Accuracy**: ±1.0 hPa (equivalent to ±8.3 meters altitude).
4. **Resolution**: 0.18 Pa (equivalent to 1.5 cm altitude difference).
5. **Output Data Rate (ODR):** Can output pressure data up to 157 Hz.

Temperature Measurement:

1. **Temperature Range**: -40°C to +85°C.
2. **Accuracy**: ±1°C over the range from 0°C to +65°C.
3. **Resolution**: 0.01°C.
4. **Output Data Rate (ODR):** Can output temperature data up to 157 Hz.

Communication Interface:

1. **I2C Interface**:
   a. Supports standard I2C protocol with selectable addresses.
   b. Addresses: Default I2C address is 0x76; alternate address is 0x77.
2. **SPI Interface**: Supports SPI with speeds up to 10 MHz.

Environmental Specifications:

1. **Operating Temperature**: -40°C to +85°C: Suitable for a wide range of environmental conditions.
2. **Operating Humidity**: 0% to 95% (non-condensing).

3. **Altitude Range**: Altitude readings from -500 meters to +9000 meters above sea level.

Mounting and Physical Characteristics:

1. **Form Factor**: Compact package: 2.0 mm × 2.5 mm × 0.95 mm.
2. **Weight**: Extremely lightweight: Typically, less than 1 gram.

Calculation Equations:

1. **Altitude Calculation**:
   The BMP280 can calculate altitude based on the pressure difference between the measurement location and a known sea level pressure:

$$\text{Altitude (m)} = 44330 \times (1 - (P/P')^{(1/5.255)})$$

Where:

- P is the measured pressure (in hPa)
- P' is the standard atmospheric pressure at sea level (1013.25 hPa)
- The result is in meters

The formula is derived from the barometric formula, which models the atmosphere's behaviour and allows for estimating altitude based on pressure.

2. **Temperature Compensation**: The BMP280 internally compensates for temperature drift in its pressure readings.

Use Cases:

1. Weather Forecasting: Used for measuring atmospheric pressure and temperature to predict weather changes.
2. Altimetry: Commonly used in drones, UAVs, and outdoor navigation devices to calculate altitude above sea level.
3. IoT and Smart Devices: Integrated into wearables and smart devices to monitor environmental conditions.

5.4.4. MAX6675 Thermocouple

The MAX6675 Thermocouple Module is an excellent sensor for measuring high temperatures, making it ideal for model rocketry applications where heat is generated, such as from the engine exhaust or during re-entry.

Figure : MAX6675 Thermocouple

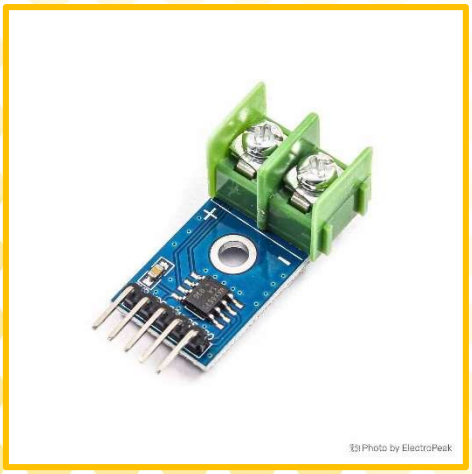

Table : MAX6675 Thermocouple Specifications

Sensor Type	K-Type Thermocouple
Temperature Range	-200°C to +700°C
Resolution	0.25°C

Accuracy	±2°C in the range of 0°C to 700°C
Communication Protocol	SPI (Serial Peripheral Interface)

Applications in Model Rocketry:

1. **Engine Temperature Monitoring**:

   During rocket ignition and flight, monitoring the temperature around the engine or combustion chamber can provide critical data on the thermal stress endured by the rocket body and components.

2. **Post-Burn Heat Analysis**:

   After the rocket's launch, you can use the thermocouple to analyse how long it takes for the engine and surrounding structure to cool down.

3. **Burnout Detection**:

   You can place the thermocouple near the nozzle or exhaust of the rocket engine to detect when fuel burnout occurs, as the temperature will drop significantly once the fuel is exhausted.

5.4.4. Altimetry

Altimetry Using the BMP280 Sensor

Altimetry refers to the measurement of altitude, or height, typically above sea level. It is a crucial component in various applications, including aviation, rocketry, UAVs (drones), and outdoor navigation systems. In the context of rocketry and aerospace, accurately determining altitude is essential for monitoring flight dynamics, ensuring safe flight paths, and verifying performance metrics. In modern altimetry, barometric sensors like the BMP280 are commonly

used due to their ability to measure atmospheric pressure, which directly correlates to altitude based on the principle that atmospheric pressure decreases as altitude increases. By analysing pressure variations, the sensor can provide real-time altitude data.

Altitude Measure using BMP280 Sensor:

The BMP280 is a precision barometric pressure sensor with integrated temperature measurement. It uses the pressure difference between two points to calculate altitude. The principle behind this measurement is based on the International Standard Atmosphere (ISA), which defines how air pressure decreases with altitude in the Earth's atmosphere.

Key Factors Involved in Altitude Calculation:

1. Atmospheric Pressure: The air pressure decreases with height as the density of the air becomes lower.
2. Sea-Level Pressure: This is a reference point for altitude calculation and is typically taken as 1013.25 hPa (standard atmospheric pressure).
3. Temperature: The BMP280 measures temperature to compensate for temperature-induced pressure changes. This ensures accurate altitude readings under various environmental conditions.

Advantages of Using the BMP280 for Altimetry in Rocketry:

1. The BMP280 provides accurate altitude measurements with relative accuracy of ±1 meter. This is especially important in aerospace applications like rocketry, where precision is critical.
2. The sensor has a fast output data rate (up to 157 Hz), allowing real-time altitude tracking during high-speed flights, such as the 180 m/s maximum speed scenario in your rocket project.
3. The BMP280 is small and lightweight, making it ideal for use in rocketry, where weight minimization is essential.
4. The BMP280 consumes very little power, allowing it to be integrated into battery-operated flight systems without significantly affecting overall power consumption.
5. The BMP280 has an integrated temperature sensor, which helps correct for temperature-induced pressure fluctuations, ensuring more accurate altitude readings under varying thermal conditions.

Applications in Rocketry:

For a 175 cm rocket, like the one in our project, mounting the BMP280 as an altimeter provides several benefits:

1. The BMP280 can track the altitude changes during the rocket's ascent and descent phases, providing real-time feedback on altitude at any point.

2. The sensor can record the apogee, in the rocket's trajectory, which is essential for validating performance metrics and calculating flight dynamics.

3. Altimetry data can be used to trigger parachute deployment at a specific altitude, ensuring the rocket safely descends after reaching its peak height.

Integration with Avionics System:

The BMP280 can be easily integrated into the rocket's avionics system for both data logging and real-time altitude monitoring. When combined with other sensors (such as IMUs like the LSM9DS1), it provides comprehensive flight data that can be used for:

• Flight trajectory analysis.

• Post-flight performance evaluation.

• Safety mechanisms, like deploying recovery systems at the correct altitude.

5.4.4. Power Status

Power Status Monitoring for Rockets

In rocketry, monitoring the power status of the rocket's systems is crucial for ensuring the successful execution of the mission. This includes managing and tracking power consumption, battery health, and power distribution to various onboard systems. Here's a detailed explanation of how to effectively manage and monitor power status in a rocket:

1. **Power Requirements and Consumption**

   Power Requirements:

   Onboard Systems: Rockets typically have multiple systems requiring power, including avionics, sensors (e.g., GPS, IMUs), communication systems, and telemetry equipment.

Actuators: Components such as servos for fin control, deployment systems for parachutes, and other mechanical systems.

Data Acquisition: Systems like cameras, telemetry units, and altimeters.

Power Consumption:

- Current Draw: The current drawn by different components must be measured to ensure that the power supply can handle peak and average loads.
- Power Budget: Create a power budget by summing up the power requirements of all systems and compare it with the available power from the rocket's battery.

2. Power Supply and Battery Management

Types of Power Supply:

- Batteries: Lithium-polymer (LiPo), Lithium-ion (Li-ion), or alkaline batteries are commonly used.
- Power Distribution: Ensure that power is distributed efficiently to all systems using power management circuits or power distribution boards.

Battery Management:

- Battery Monitoring: Track voltage levels, current draw, and battery health. Use battery management systems (BMS) to monitor state of-charge (SoC) and state-of-health (SoH).

- Battery Protection: Implement over-current, over-voltage, and under-voltage protection to avoid damage to the battery and ensure safe operation.

Voltage Regulation:

- Voltage Regulators: Use voltage regulators to provide stable voltage to different systems. This is crucial when different components operate at varying voltage levels.

3. **Power Status Monitoring System**

Sensors and Components:

- Voltage Sensors: Measure the voltage of the battery and ensure it is within the safe operating range.
- Current Sensors: Measure the current drawn by the rocket's systems to monitor power consumption.
- Temperature Sensors: Monitor the temperature of batteries and power components to prevent overheating.

Data Acquisition and Display:

- Telemetry System: Send real-time power status data (voltage, current, temperature) to a ground station or onboard data logger.
- User Interface: Provide a display or interface for real-time monitoring of power status during the flight.

4. **Power Management Strategies**

Power Optimization:

- Efficient Components: Use energy-efficient components and optimize system operation to reduce power consumption.

- Power Saving Modes: Implement power-saving modes for noncritical systems during low-power phases of the flight.

Backup Power:

- Redundant Systems: Consider redundant power supplies or backup batteries for critical systems to ensure reliability.
- Power Fail-Safes: Design the system to handle power failures gracefully, such as by saving critical data and shutting down nonessential systems safely.

To assess the power status of a rocket based on the specifications of various sensors, you'll need to consider the power requirements and consumption of each sensor. Here's a detailed breakdown for the LSM9DS1, BMP280, and NavIC GPS sensors, as well as general considerations for monitoring power status in a rocket.

Table: Power requirements and consumption of sensors

BMP280	
• Normal Mode: Around 0.1 mA • Sleep Mode: Less than 0.01 mA	1.71V to 3.6V
NavIC GPS Module	
• TrackingMode: Approximately 30 mA. • Acquisition Mode: Can peak at 50 mA.	3.0V to 3.6V

• Standby Mode: Lower, around 10 mA.	

Total Power Consumption: Assuming simultaneous operation of all sensors:

1. BMP280: ~0.33 mW
2. NavIC GPS: ~99 mW (Tracking Mode)

Reason for Selection of Sensors:

Altimeter Selection Criteria

1. Altitude Measurement:
   - Accuracy: Provides precise altitude readings based on atmospheric pressure.
   - Resolution: High-resolution sensors offer detailed altitude data, essential for tracking rocket performance and ensuring accurate deployment of systems like parachutes.
2. Environmental Adaptability:
   - Robustness: Designed to work reliably in varying environmental conditions, including high altitudes and extreme temperatures.
3. Integration with Other Systems:
   - Compatibility: Can be easily integrated with onboard avionics and telemetry systems for real-time data transmission and analysis.
4. Data Logging and Monitoring:
   - Real-time Feedback: Enables real-time monitoring of altitude during flight, which is critical for mission success and safety.

5. Low Power Consumption:
   - Efficiency: Many modern altimeters are designed to consume minimal power, extending battery life and ensuring that power is available for other critical systems.

BMP280 Selection Criteria:

1. High Accuracy: The BMP280 provides accurate pressure measurements, which can be converted into precise altitude readings. This is essential for tracking the rocket's altitude and ensuring timely deployment of parachutes or other systems.
2. Low Power Consumption: With its low power consumption, the BMP280 is well suited for battery-powered rocketry applications where power conservation is critical.
3. Compact Size: The BMP280's small form factor makes it easy to integrate into the rocket's avionics system without adding significant weight or requiring extensive modifications.
4. Stable Performance: The BMP280 includes temperature compensation to maintain accurate pressure readings across a range of environmental conditions, improving reliability in varying altitudes.
5. Cost-Effective: The BMP280 is relatively affordable compared to other high-precision altimeters, making it a cost-effective choice for rocketry projects.

GPS Module Selection Criteria

1. Positional Accuracy: Provides accurate positioning data, essential for tracking the rocket's trajectory and ensuring successful mission operations such as stage separation and landing.
2. Real-Time Tracking: Allows real-time monitoring and transmission of location data, which is critical for both mission control and post-flight analysis.
3. Integration with Other Systems: Easily integrates with onboard avionics and telemetry systems for comprehensive data collection and analysis.
4. Environmental Adaptability: Designed to work reliably in various environmental conditions, including high altitudes and potentially challenging weather.
5. Global Coverage: Provides global positioning capabilities, ensuring that the rocket can be tracked regardless of its location.

NavIC GPS Selection Criteria

1. High Accuracy: The BharatPi NavIC GPS provides high positional accuracy with horizontal accuracy within 5 meters and vertical accuracy within 10 meters. This is crucial for precise tracking of the rocket's flight path and ensuring accurate positioning data for mission analysis.
2. NavIC Support: Supports the Indian Regional Navigation Satellite System (NavIC), which provides enhanced accuracy and reliability in

the Indian region. This regional focus can be advantageous for missions within or near India.

3. High Update Rate: Capable of providing updates at up to 10 Hz, ensuring that the rocket's position is tracked in real-time with high granularity, which is important for monitoring rapid changes in position during the flight.
4. Integration and Compatibility: The BharatPi NavIC GPS module integrates well with onboard systems, providing a straightforward solution for real-time tracking and telemetry.
5. Cost-Effective: Compared to some high-end GPS modules, the BharatPi NavIC offers a cost-effective solution without compromising essential features for rocketry applications.

5.5. Circuit Diagram of Avionics

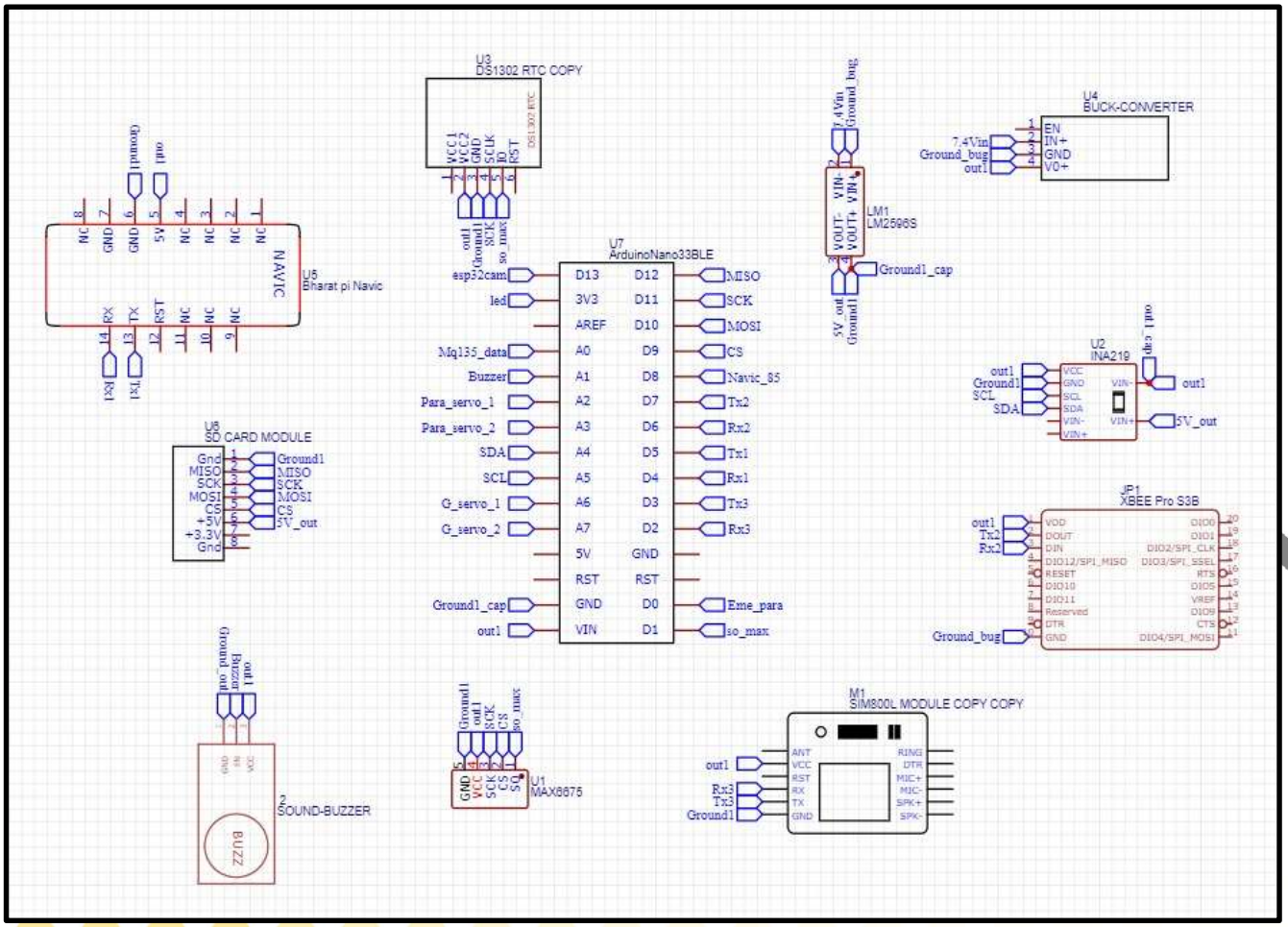

6. Vehicle Recovery System

6.3. Separation And Deployment

In model rocketry, separation and deployment using pyrotechnic charges (such as crimson powder or black powder) is a highly effective and commonly used method, especially for precise, controlled separation and deployment of recovery systems like parachutes.

6.3.1. Separation Method

Pyrotechnic Charges (Crimson Powder or Black Powder):

Small explosive charges are used to initiate separation between the stages or compartments of a model rocket. Crimson powder is a type of pyrotechnic charge that works similarly to black powder, generating a controlled explosion to create the necessary force for separation.

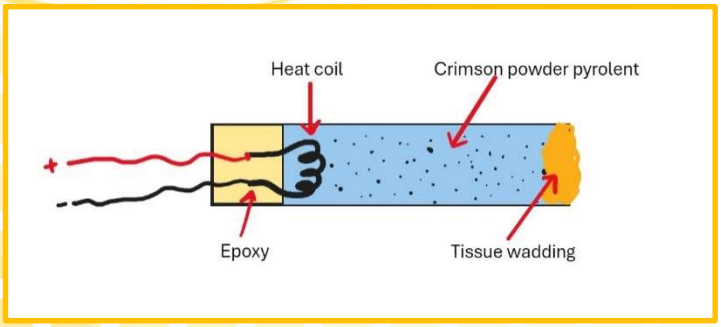

Figure : Homemade Pyro charges Development

Ignition Mechanism: The pyrotechnic charge is typically ignited using an electronic system, such as a timed igniter or altimeter-triggered ignition, which ensures precise control over when the separation occurs.

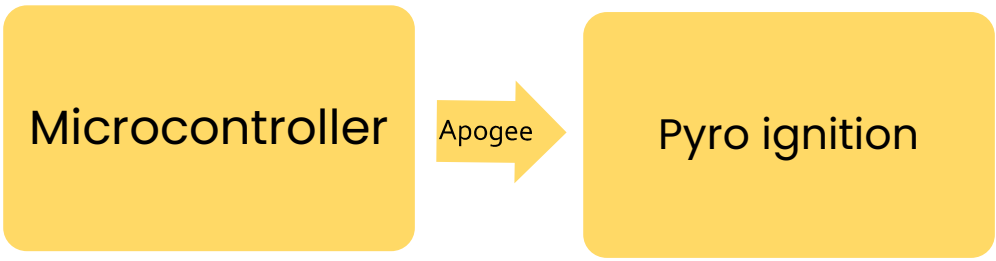

Pyrotechnic Separation Process:

Stage 1: Pre-Launch Setup

The pyrotechnic charge is placed in a small, sealed chamber between the rocket stages or in a designated separation coupler. Wires connect the charge to an electronic ignition system, which is often controlled by an altimeter or timer.

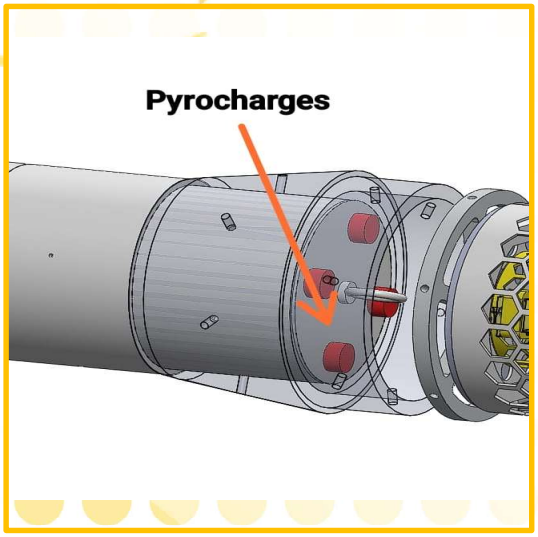

Figure : Pyrocharges between avionics and transition coupling

Stage 2: Rocket Launch

As the rocket ascends, the altimeter or timer monitors the altitude or flight time to determine the optimal point for separation.

Stage 3: Ignition of Pyro Charge

At the pre-programmed altitude or at stage burnout, the electronic system sends an electrical signal to the pyrotechnic charge, igniting it.

The pyrotechnic charge detonates, producing a rapid build-up of pressure that forces the stages apart or ejects a recovery system (like a parachute).

Stage 4: Separation

The force from the pyrotechnic charge physically separates the first and second stages or payload section of the rocket.

In multi-stage rockets, this allows the next stage's motor to ignite, continuing the flight.

In single-stage rockets or for payload sections, the separation prepares the rocket for recovery system deployment.

Our team is using Crimson Powder exclusively as ejection charge for our model rocket.

Advantages of Crimson Powder over Black Powder:

Crimson Powder has certain advantages over Black Powder, including:

- lower combustion temperature which minimizes heat damage to the rocket
- higher impetus (i.e. more potent)
- residue is odourless and cleans up readily with warm water

Figure : 10g Crimson Powder

Table : Ingredients to make Crimson Powder

Ingredients to make Crimson Powder:	
Potassium Nitrate	6.2 grams
Ascorbic acid (In the form of Vitamin C tablets, 11 tablets, 500 mg each*)	4.5 grams
Red iron oxide	0.5 gram
Water, boiling	30 ml

* Vitamin C tablets are typically 83% ascorbic acid, 17% cellulose filler.

6.3.2. Deployment of Rocketry Systems

Drogue Chute and Main Chute

Our team is using a dual-deployment system where a small drogue parachute is deployed at higher altitudes, followed by the main parachute at lower altitudes. This ensures a controlled descent, with a faster fall initially and a slower, safer landing. Dual-deployment is used for recovery in order to minimize down-range drift of the rocket.

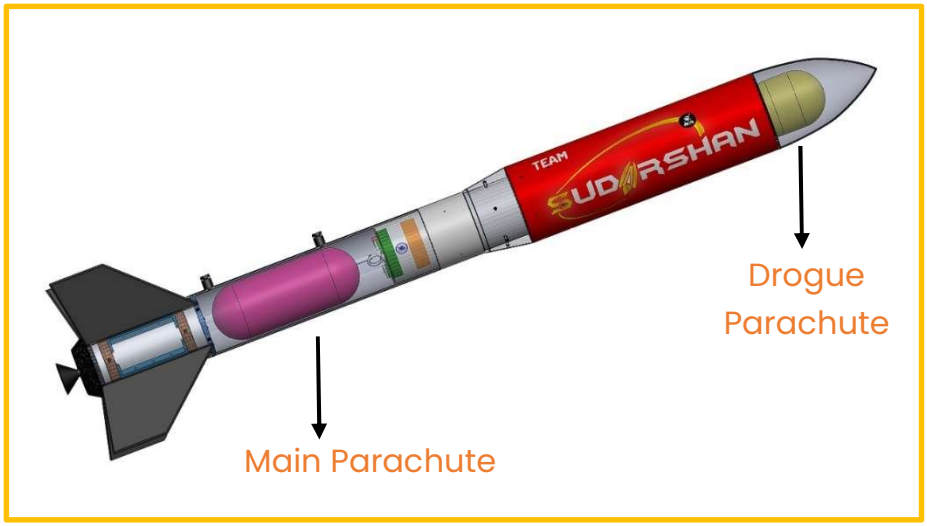

Figure : Main and Drogue Parachute in Rocket

Parachute Deployment:

The parachute deployment mechanism used in the Launcher is dual deployment mechanism, drogue and the main. The flight computer is continuously calculating the altitude and as soon as the apogee is reached the pyro charges are ignited and due to pressure inside the upper body tube, the nose cone pop-opens. Due to the momentum of the falling nose cone – it brings out with it the drogue parachute which is resting below the nose cone. Hence at nearly 1000m the drogue chute opens and also the payload is deployed which is mention further in this document. 16 m/s terminal velocity is achieved by the drogue chute.

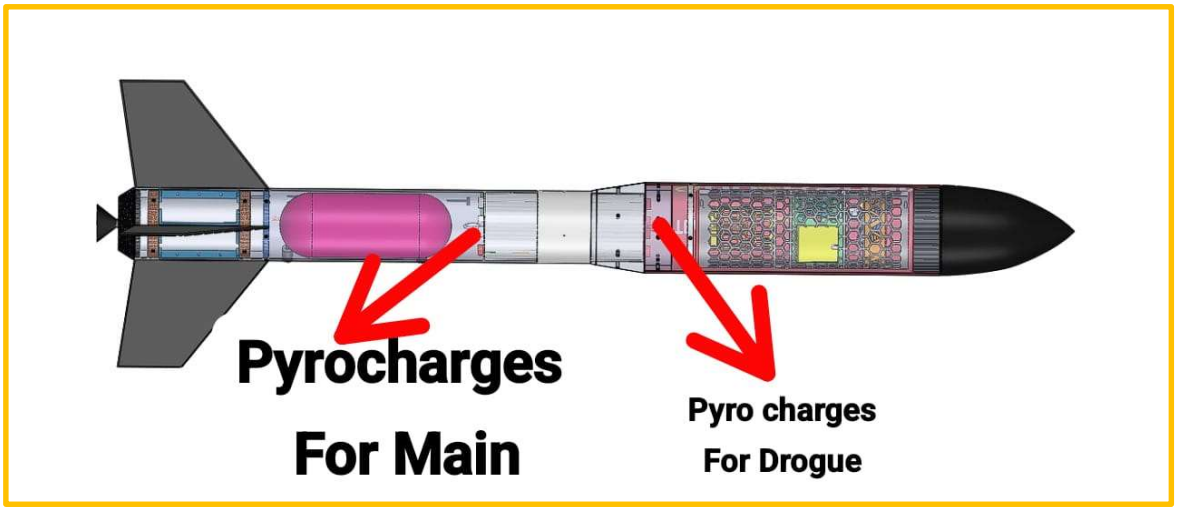

Figure : Puro charges representation in rocket

At 500m second set of pyro charges located between the avionics and the lower body tube is ignited and the rocket divides into two parts and lower body tube is separated giving way to eject the main parachute. 3m/s terminal velocity is achieved by the main chute.

The reasoning for employing dual-event recovery system is two-fold:

1) Enhanced reliability of a safe descent of the rocket:

   The primary event involves a simple process of merely separating the rocket into two pieces, generating an aerodynamically unstable and therefore relatively slow descent. If there is a subsequent anomaly with the main event (failed chute deployment), the consequence is essentially non-hazardous and minimal damage to the rocket can be expected from the resulting "hard" landing.

2) Reduced range:

   The rocket descends relatively quickly during the tumbling event, reducing the overall descent time. As such, wind has less time to carry

the rocket downrange. Typically, the range can be reduced to 1/3 of that expected if the parachute were to deploy at apogee. This can be an important factor if there is a brisk wind blowing at time of launch. The first pyrotechnic charge may deploy the drogue chute, while a second charge deploys the main chute at a lower altitude.

6.3.2.2. Payload Deployment Method Demonstration (Drogue Chute)- at Apogee

STAGE 0 – Payload Assembly

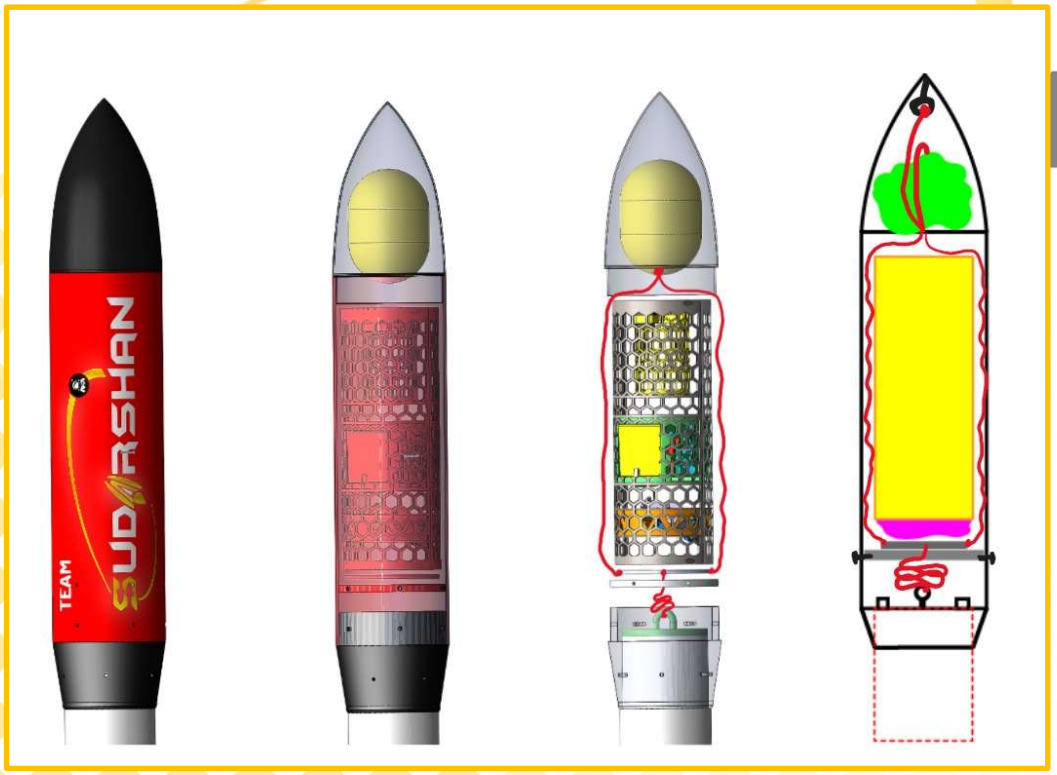

Figure : Payload Assembly

STAGE 1 – Explosion of 2/4 pyro charges in the Payload-bay

When any one of the two flight computers detect apogee, the first set of pyro charges explode. There is total four pyro charges for the payload deployment. They both are protruded out of top cap of avionics bay which is exposed to the payload bay. The pressure inside the payload bay increases instantly pushing the nose cone pop-open from the payload body tube. The nosecone was friction fit to the body tube. After nose cone ejection, now Drogue parachute which was kept below the nose cone is exposed to atmosphere.

In case of failure of pyro charges, the next set of pyro charges will explode just 200ms after the first set as a fail-safe.

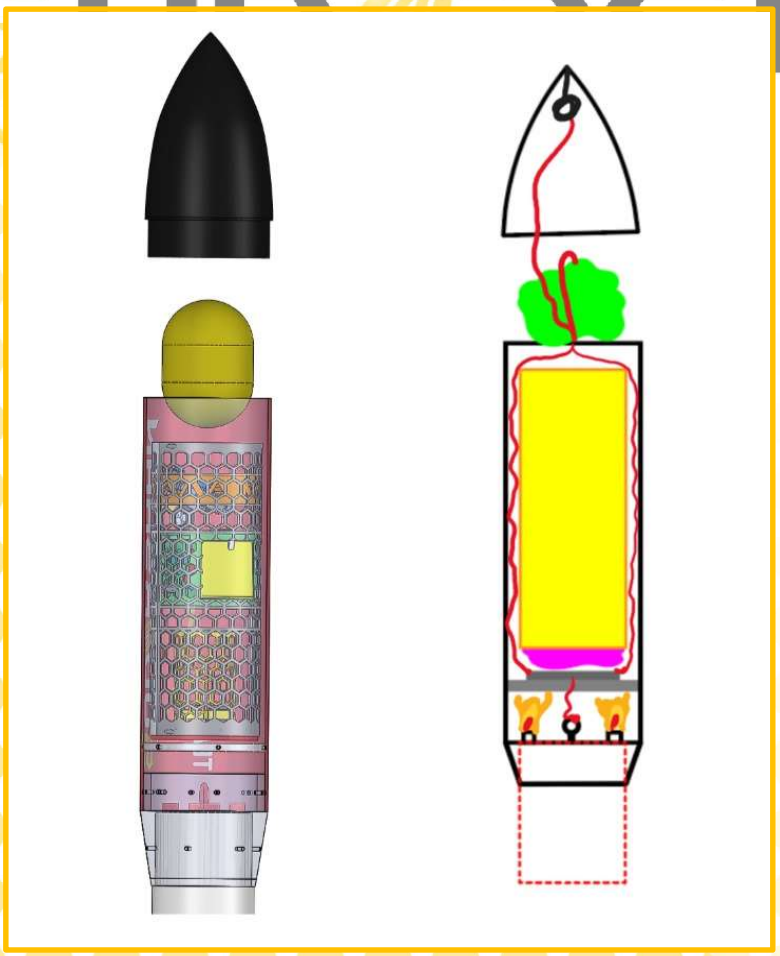

Figure : Explosion of 2/4 pyro charges in the Payload-bay

STAGE 2 – Drogue parachute opens (Payload Deployment)

The drogue chute opens up immediately due to unwrapping by the falling nose cone.

The last end shock-cord of the drogue is divided into two cords which are tied to the ends of Payload ejection plate. The CanSat (Payload) is resting on the payload ejection plate.

As soon as the parachute opens and shock cord pulls the ejection plate, the ejection plate will come out of the payload bay along with the payload. Now the payload is out of the rocket body and because it was just kept on the ejection plate and not fixed, it will fall down instantly due to jerks and tilts.

The ejection plate is further tethered to the payload bay the connects the upper body and lower body of the rocket.

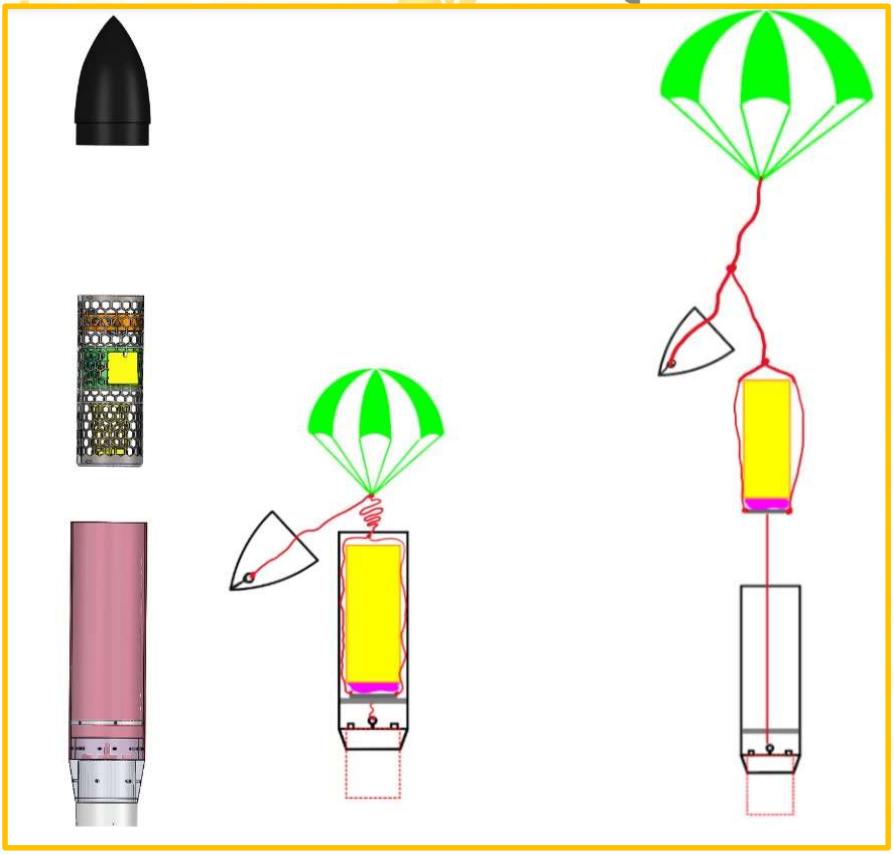

Figure : Drogue parachute opens (Payload Deployment)

STAGE 3 – Payload controlled descent

As soon the payload falls off the ejection plate the parachute of payload open due to air drag. The Payload was placed upside down such that the payload parachute was between the ejection plate and payload itself. This way we can protect the payload from ejection shock as well as parachute entanglement with rocket drogue chute.

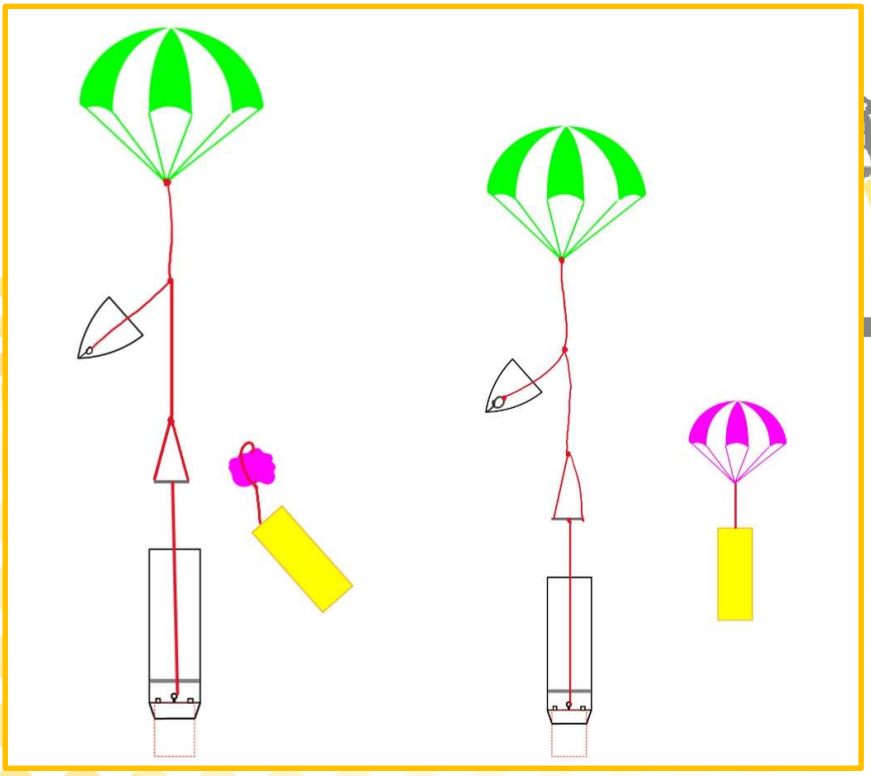

Figure : Payload controlled descent

Table : Summary of recovery of rocketry system

Main Parachute			
Material	Diameter	Length	Mass
Ripstop Nylon	400cm	10 cm	1.15kg
Drogue Parachute of Rocket			
Material	Diameter	Length	Mass
Ripstop Nylon	100 CM	10.4 CM	0.098 KG
Shroud Lines of Drogue Parachute of Rocket			
Material	Lines	Length	
Nylon Polymer	10	150 CM	-
Shroud Lines of Main Parachute			
Material	Lines	Length	
Nylon Polmer	16	650 cm	-
Shock Cord of Main Parachute			
Material	Length	Mass	
Nylon	500 cm	0.035 kg	-
Shock Cord of Drogue Parachute of Rocket			
Material	Length	Mass	
Nylon	100 cm	0.007 kg	-

6.3.3. Shock Cords

Shock cords made of strong materials are commonly used in model rocketry as part of the recovery system, connecting the rocket body to the recovery device, such as a parachute. Their purpose is to absorb

the force generated when the ejection charge pushes the nose cone and recovery

system out of the rocket body, preventing the rocket components from separating completely or getting damaged.

Nylon shock cords are popular for their versatility, and they're a reliable choice for both small and mid-sized model rockets.

Nylon Shock Cords Selection Criteria:

- Nylon is slightly elastic, allowing it to stretch and absorb some of the kinetic energy during the ejection phase, which reduces the chance of a "zipper effect" (tearing of the body tube).
- Nylon is resistant to wear and tear, and it can withstand the rigors of repeated launches and environmental conditions like heat and moisture.
- Nylon cords are lightweight, ensuring they don't significantly affect the rocket's weight or flight performance.
- Nylon can withstand some exposure to the heat generated by the ejection charge.

6.3.4. Shroud Lines

Shroud lines are the strings or cords that connect the canopy of a parachute to the payload or rocket body in model rocketry. They play a critical role in ensuring the parachute opens correctly and provides a stable descent for the rocket after deployment.

<u>Key Functions of Shroud Lines:</u>

- Connection: They link the parachute canopy to the rocket's shock cord or directly to the nose cone/payload section.
- Stability: Properly arranged shroud lines help the parachute open symmetrically and maintain stability during descent, preventing it from collapsing or tangling.
- Drag Generation: They ensure the parachute deploys in a way that maximizes drag, which slows down the rocket for a safe landing.

Electronics for Controlled Separation and Deployment

Altimeter-Based Deployment: The most common method for precise control of the separation and deployment is through an onboard altimeter. The altimeter measures the rocket's altitude and triggers the pyrotechnic charges at specific altitudes (e.g., at apogee for separation and parachute deployment).

6.4. Shock Calculations

To calculate the shock load on the shock cord in a model rocket, we use Newton's second law of motion (F = ma) to estimate the forces involved when the parachute deploys and the rocket decelerates.

Given the values:

- Mass of the rocket m = 9 kg
- Apogee height h = 1030 m

1. **Velocity at Deployment**

It is the velocity at which the rocket is moving when the parachute deploys. This is generally the speed at apogee, right before deployment.

The given velocity is 10 m/s

2. **Deceleration Time (t_d)**

Estimation of the deceleration time during which the shock cord absorbs the energy. A typical deceleration might happen in about (t=0.1-0.5) seconds. We'll assume a reasonable deceleration time of t=0.2s. This value can vary depending on the cord's elasticity and the deployment dynamics, but 0.2 seconds is a typical estimate for many model rockets.

3. **Calculate Deceleration (a)**

The deceleration is given by:

$$a = \frac{v}{t_d}$$

$$a = \frac{10}{0.2}$$

$$a = 50 \text{ m/s}^2$$

4. **Shock Load (F)**

Using Newton's second law, you can calculate the force experienced by the shock cord:

$$F = ma$$

$$F = m.\frac{v}{t_d}$$

$$F = 9 \times \frac{10}{0.2}$$

$$F = 450 \text{ N}$$

Conclusion:

The shock load on the cord is about 450N.

6.5. Calculation of Main Parachute

Here the Diameter of the main parachute is 4cm

Formula:

$$\mathbf{F_{drag} = \frac{1}{2}\,\rho\, C_d\, V_d^2\, (Area)_{parachute}}$$

Where:

ρ = air density

C_d = drag coefficient

V_d = descent velocity

Area = Area of parachute

F_{drag} = Drag Force

$$\boxed{F_{drag} = m.g}$$

in which m is the mass in kg and g is the gravitational acceleration,

So,

$$F_{drag} = m.g$$

Here m= 9.64kg

g = 9.8m/s²

$$F_{drag} = 9.64 \times 9.8$$

$$\boxed{\mathbf{F_{drag} = 84.67\ N}}$$

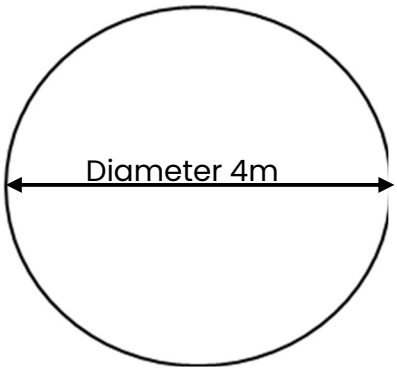

Circular Main Parachute

$$\text{Diameter} = \sqrt{\frac{4\,.\,A}{\pi}}$$

On squaring both sides

$$\text{Diameter} = \frac{4\,.\,A}{\pi}$$

$$A = \frac{\text{Diameter}^2\,.\pi}{4}$$

$$A = \frac{16\,.\,\pi}{4}$$

$$A = 12.56\ m^2$$

Where : $A = (\text{Area})_{\text{parachute}}$

By the $(\text{Area})_{\text{parachute}}$ we can determine the descent velocity of Rocket:

$$V_d^2 = \frac{2\,.F_{drag}}{A\,.\,C_d\,.\,\rho}$$

$$V_d = \sqrt{\frac{2\,.F_{drag}}{A\,.\,C_d\,.\,\rho}}$$

$$V_d = \sqrt{\frac{2 \times 84.76}{12.56 \times 0.75 \times 1.225}}$$

$$V_d = \sqrt{\frac{169.52}{11.539}}$$

$$V_d = \sqrt{14.6904}$$

$$\boxed{V_d = 3.832}$$

6.6. Calculations Of Drogue Parachute

Considering the Diameter of Drogue Parachute: 1m

Formula:

$$\mathbf{F_{drag} = \frac{1}{2}\,\rho\, C_d\, V_d^2\, (Area)_{drogue}}$$

the drag force of the rocket

$$F_{drag} = m.g$$

m = Mass of the rocket(kg)

g = Gravitational Acceleration (m/s^2)

$$F_{drag} = m.g$$

$$F_{drag} = 8.64 \times 9.8$$

$$\boxed{\mathbf{F_{drag} = 84.67\ N}}$$

Her the Drag Coefficient (C_d) is 0.75.

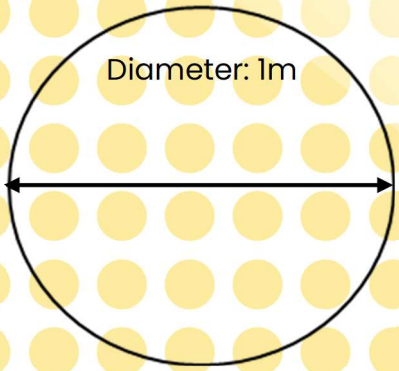

Formula : Diameter = $\sqrt{\frac{4 \times A}{\pi}}$

Where: A = $(Area)_{drogue}$

Circular Drogue Parachute

From the given formula:

$$A = \frac{\text{Diameter}^2 .\pi}{4}$$

$$A = \frac{3.14}{4}$$

$$A = 0.785 \text{ m}^2$$

From this we will find out descent velocity,

$$V_d^2 = \frac{2 .F_{drag}}{A . C_d . \rho}$$

$$V_d = \sqrt{\frac{2 \times 84.67}{0.785 \times 0.75 \times 1.225}}$$

$$V_d = \sqrt{234.797} \text{ m/s}$$

$$\boxed{V_d = 15.32 \text{ m/s}}$$

Descent Velocity of Drogue Parachute is 15.32 m/s.

6.7. Parachute Drift Calculation

The parachute drift calculation has been done using the provide wind vector parameters and the result are as follows:

V_P: Velocity of main parachute

V_d: Velocity of drogue parachute

V_W : Wind Velocity

Δh_P : Change in Height of main parachute

Δh_d : Change in Height of drogue parachute

Taking,

$V_P = 3.7$ m/s $\qquad V_d = 6$ m/s

$\Delta h_P = 400$ m $\qquad \Delta h_d = 630$ m

For Parachute:

$$V_P = \frac{\Delta h_P}{\Delta t} \quad \text{--(1)}$$

For Wind:

$$V_W = \frac{\Delta x}{\Delta t} \quad \text{--(2)}$$

From eq$_n$ (1) and (2),

$$\Delta t = \frac{\Delta h}{V_P} . V_W$$

$$Drift = \frac{\Delta h_P}{V_P} . V_W + \frac{\Delta h_d}{V_d} . V_W$$

$$\boxed{Drift = \left(\frac{\Delta h_P}{V_P} + \frac{\Delta h_d}{V_d}\right) . V_W}$$

For $V_W = 5\ m/s$:

$$Drift = \left(\frac{400}{3.7} + \frac{630}{16}\right) . 5$$

$$\boxed{Drift = 737.415\ m}$$

For $V_W = 7.03\ m/s$:

$$Drift = \left(\frac{400}{3.7} + \frac{630}{16}\right).7.03$$

$$\boxed{Drift = 1036.806\ m}$$

For $V_W = 10\ m/s$:

$$Drift = \left(\frac{400}{3.7} + \frac{630}{16}\right).10$$

$$\boxed{Drift = 1474.8\ m}$$

Wind Velocity	Drift Calculated
5 m/s	$737.415\ m$
7.03 m/s	$1036.806\ m$
10 m/s	1474.8m

Parachute Drift OpenRocket Simulation at 5 m/s wind velocity

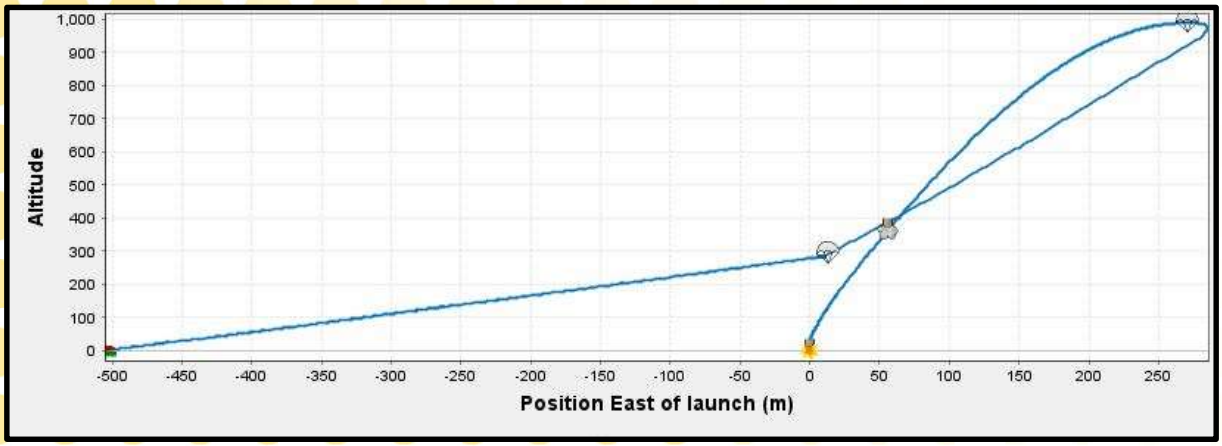

Figure : Parachute Drift OpenRocket Simulation at 5 m/s wind velocity

Parachute Drift OpenRocket Simulation at 7.03 m/s wind velocity

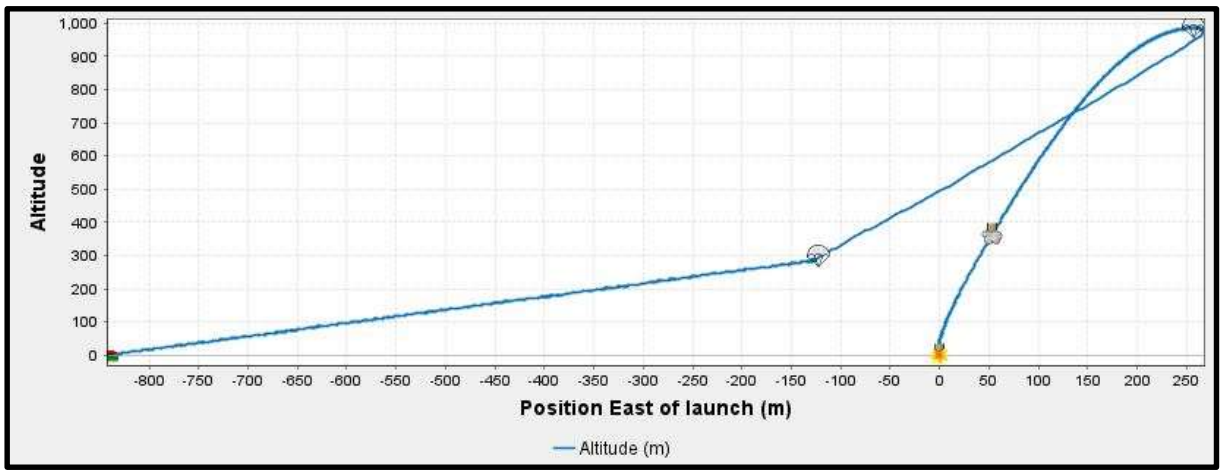

Figure : Parachute Drift OpenRocket Simulation at 7.03 m/s wind velocity

Parachute Drift OpenRocket Simulation at 10 m/s wind velocity

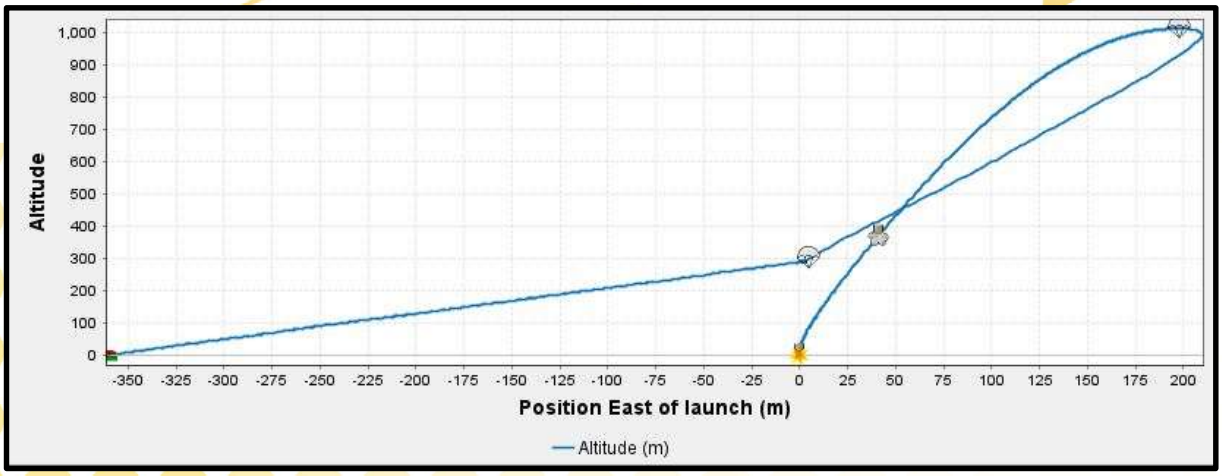

Figure : Parachute Drift OpenRocket Simulation at 10 m/s wind velocity

Wind Velocity	Drift from simulations

7. Vehicle Mission Performance Prediction

7.1. Simulation Methods

Simulation methods play a key role in predicting vehicle mission performance. These methods allow engineers to model and simulate various aspects of a vehicle's operation without the need for physical testing, reducing time and cost.

The team used multiple simulation methods for the same type of mission performance analysis as a method of redundancy and method of finding precise data.

RockSim Simulation

RockSim is a commercial software specifically designed for model rocket design and flight simulation. It helps users predict the flight behaviour of rockets based on design parameters and environmental conditions.

MATLAB Simulation

MATLAB is a powerful platform used for mathematical modelling, simulation, and data analysis across various engineering fields. In rocketry, MATLAB can be used to develop custom simulations for complex systems, offering flexibility and advanced modelling techniques.

OpenRocket Simulation

OpenRocket is an open-source rocket design and simulation software widely used by hobbyists and students. It provides detailed rocket

design and flight simulation capabilities similar to RockSim but with a focus on accessibility.

Figure : Comparison of the Three Simulation Platforms

Feature	RockSim	MATLAB	OpenRocket
Purpose	Rocket design and simulation	Custom simulations (trajectory, control)	Rocket design and simulation
Customization	Limited to rocket models	Highly customizable, complex modeling	Limited to rocket models
Advanced Modeling	Limited	Extensive	Basic

7.2. Simulation Flight Profiles

Key factors affecting altitude, velocity, acceleration, drag force and stability include wind speed, temperature, humidity, pressure i.e. weather conditions.

Parameters	Average	Maximum
Wind Speed m/s	3	3
Temperature °C	28	28
Humidity %	52.4	52.4
Pressure hPa	1000.4	1000.4

7.2.1 Flight Altitude

Flight altitude in simulations represents the vehicle's vertical position over time. It helps predict maximum altitude (apogee), rate of climb, and descent. Simulated altitude profiles are crucial for assessing vehicle performance, ensuring the design meets mission goals (e.g., reaching a target altitude or maintaining stable flight).

7.2.1.1. RockSim Simulation

Altitude vs Time at Average Weather Conditions

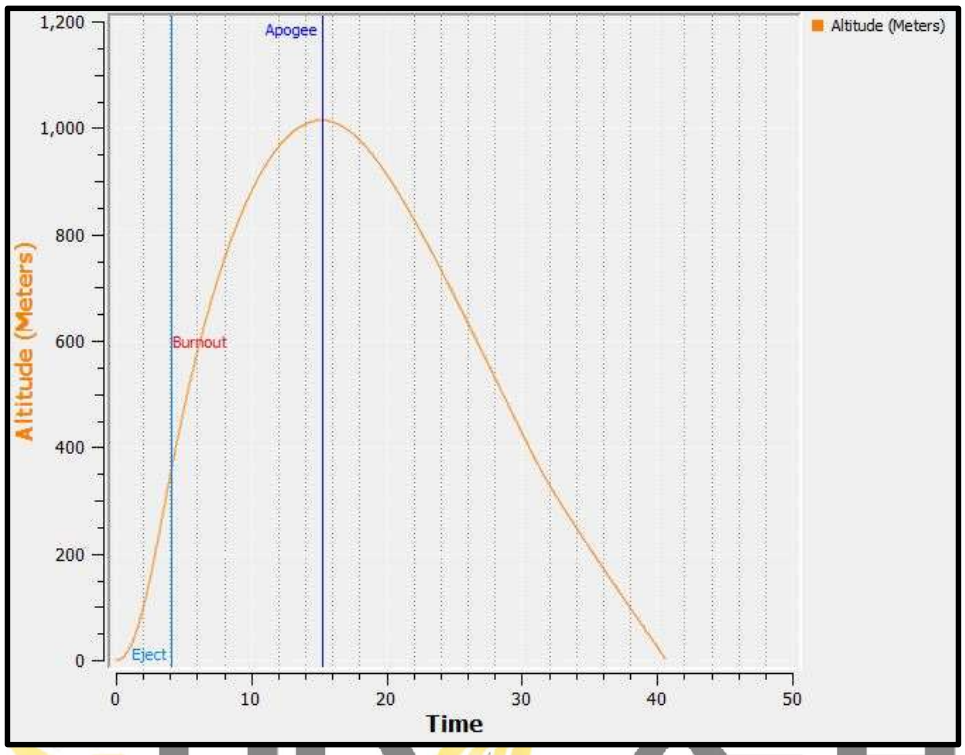

Figure : RockSim Simulation Altitude vs Time at Average Weather Conditions

Altitude vs Time at Maximum Weather Condition

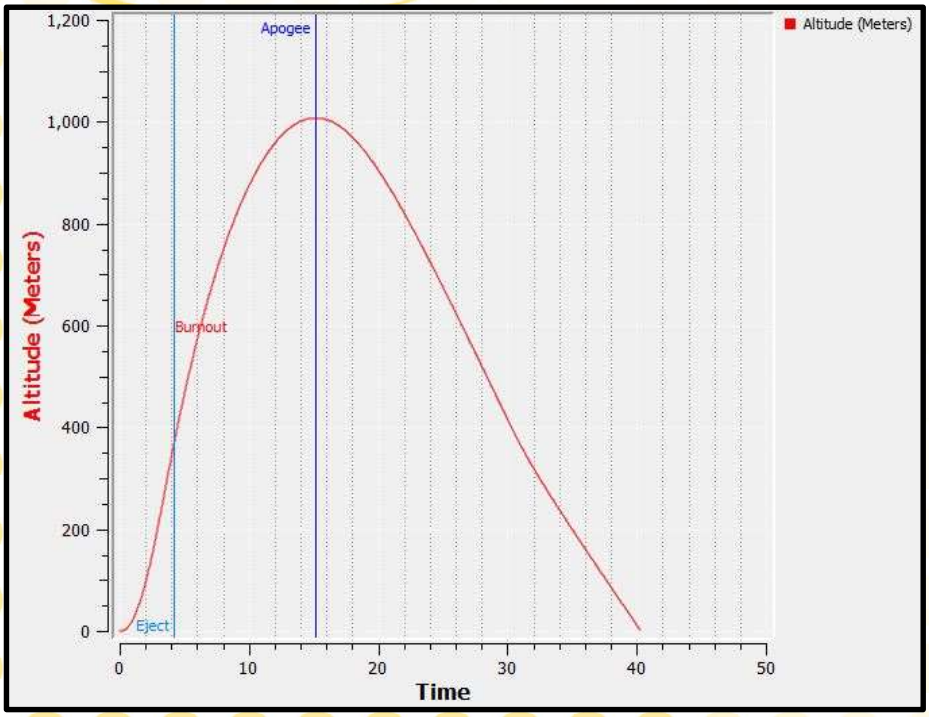

Figure : RockSim Simulation Altitude vs Time at Maximum Weather Conditions

Table: RockSim Altitude Simulations

Parameters	Average	Maximum
Altitude	1013.89m	1007.37m

7.2.1.2. OpenRocket Simulation

Altitude vs Time at Average Weather Conditions

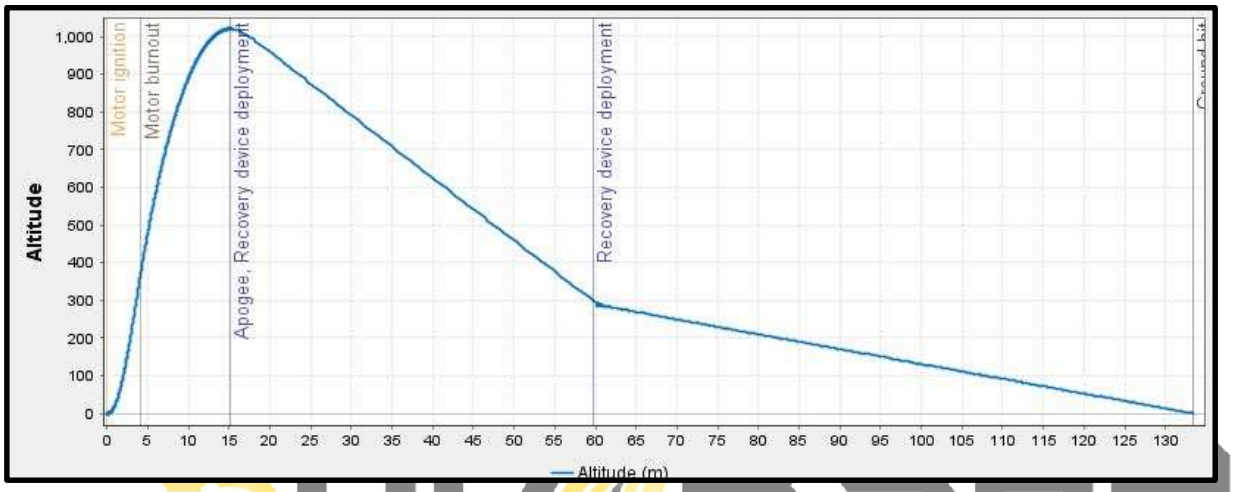

Figure : Open Rocket Simulation Altitude vs Time at Average Weather Conditions

Altitude vs Time at Maximum Weather Conditions

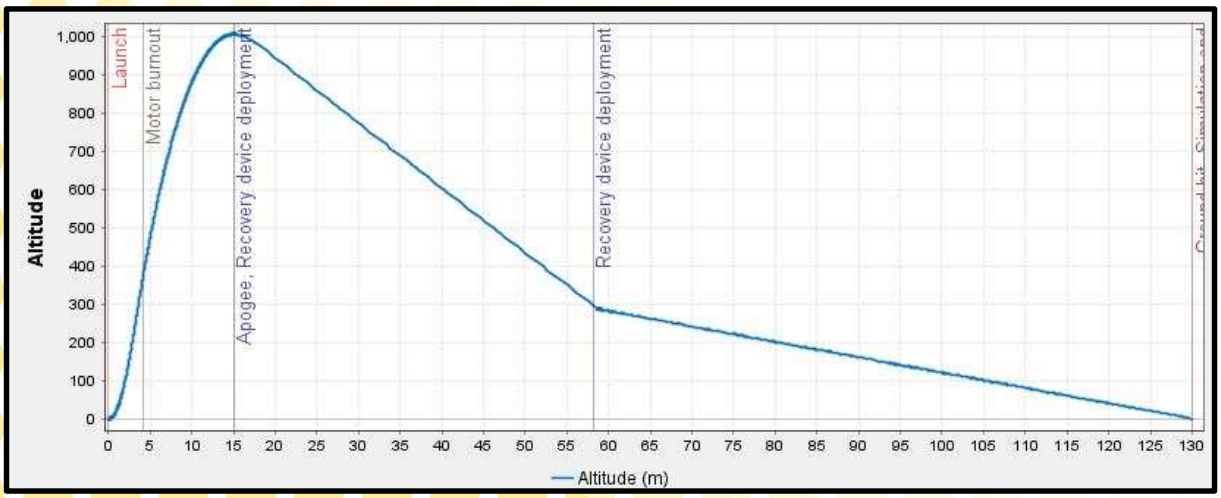

Figure : Open Rocket Simulation Altitude vs Time at Maximum Weather Conditions

Table:Open Rocket Altitude Simulations

Parameters	*Average*	*Maximum*
Altitude	*1015m*	*1006.96m*

7.2.1.3. MATLAB Simulations

Altitude vs Time at Weather Conditions

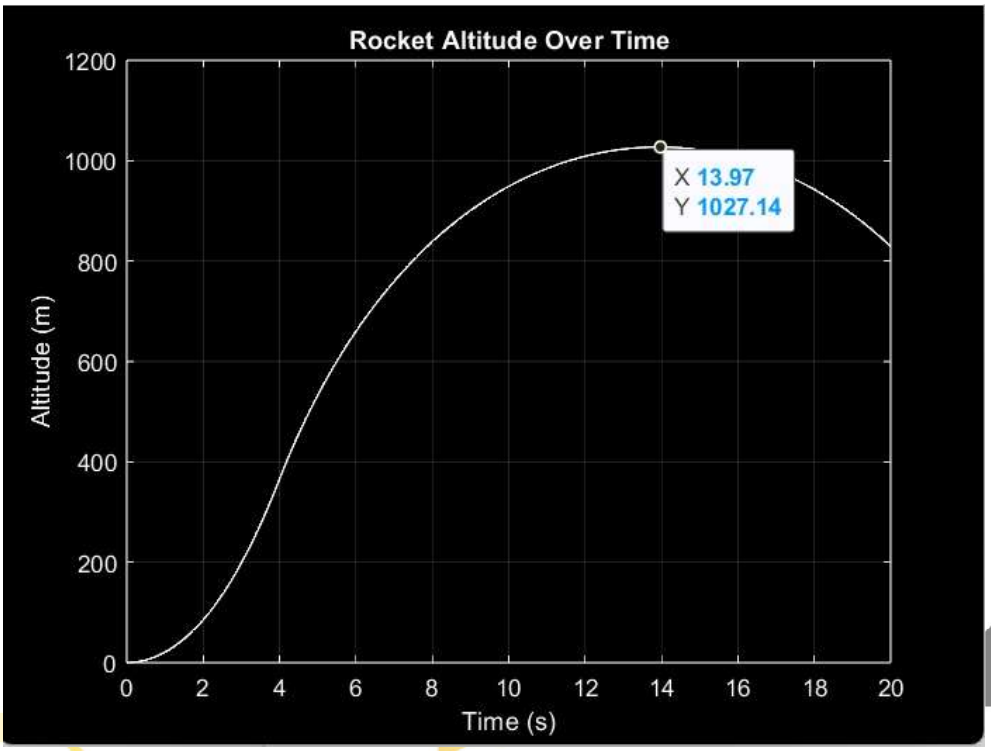

Figure : MATLAB Simulation Altitude vs Time at ideal Weather Conditions

7.2.2. Flight Acceleration

7.2.2.1. RockSim Simulation

Velocity vs Time at Average Weather

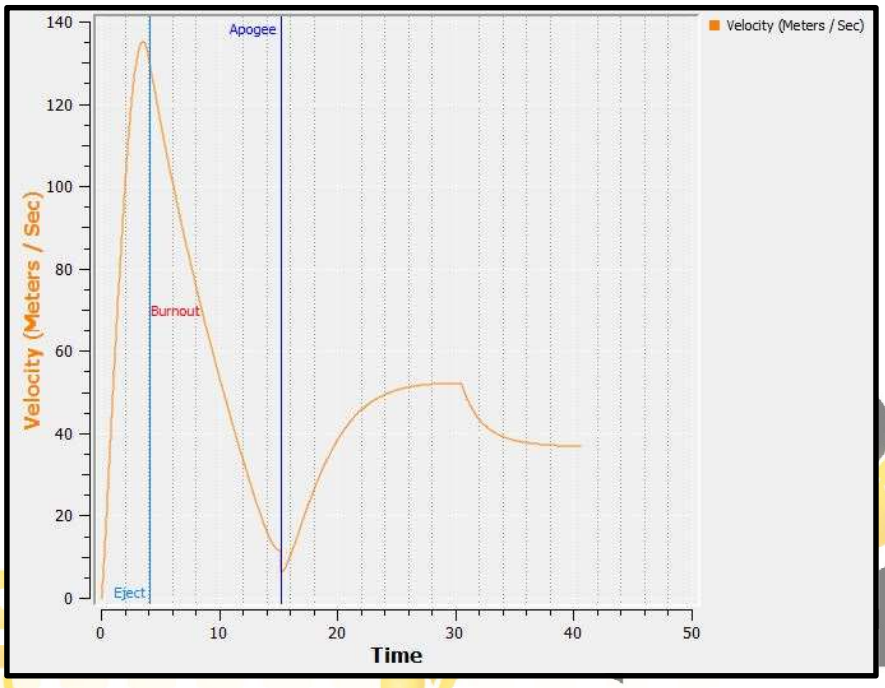

Figure : RockSim Simulation Velocity vs Time at Average Weather Conditions

Velocity vs Time at Maximum Weather

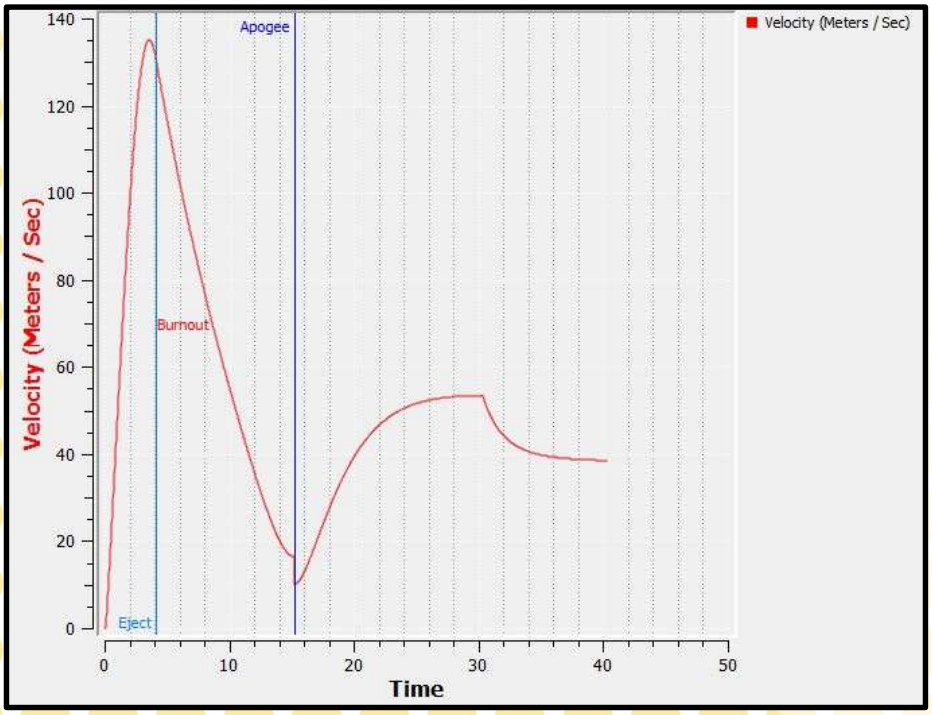

Figure : RockSim Simulation Velocity vs Time at Maximum Weather Conditions

Table: RockSim Velocity Simulations

Parameter	Average	Maximum
Velocity	**135.12**	**135.07 m/s**

7.2.2.2. OpenRocket Simulations

Velocity vs Time at Average Weather

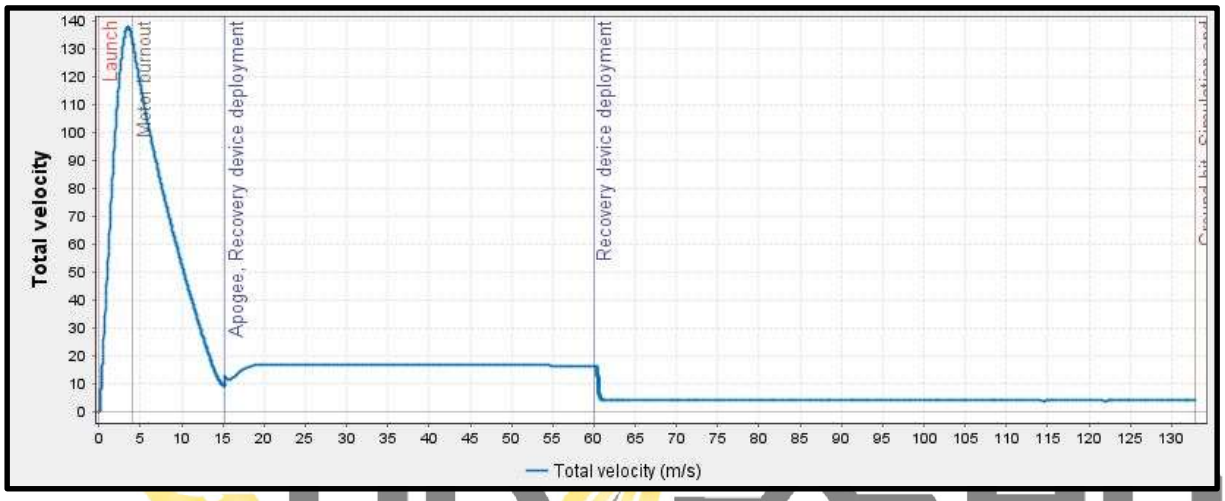

Figure : Open Rocket Simulation Velocity vs Time at Average Weather Conditions

Velocity vs Time at Maximum Weather

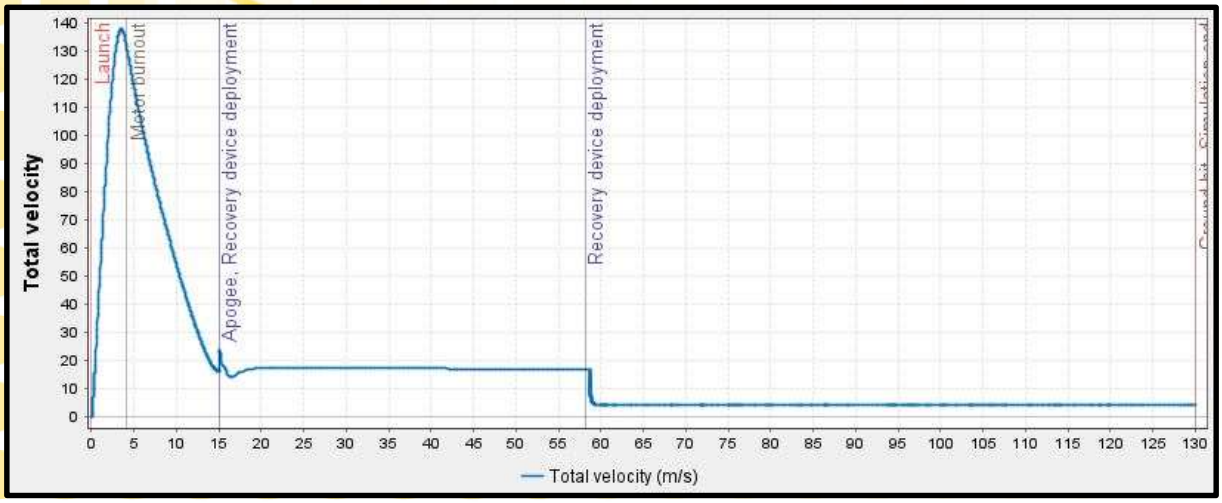

Figure : Open Rocket Simulation Velocity vs Time at Maximum Weather Conditions

Parameter	Average	Maximum
Velocity	138m/s	135 m/s

7.2.2.3. MATLAB Simulation

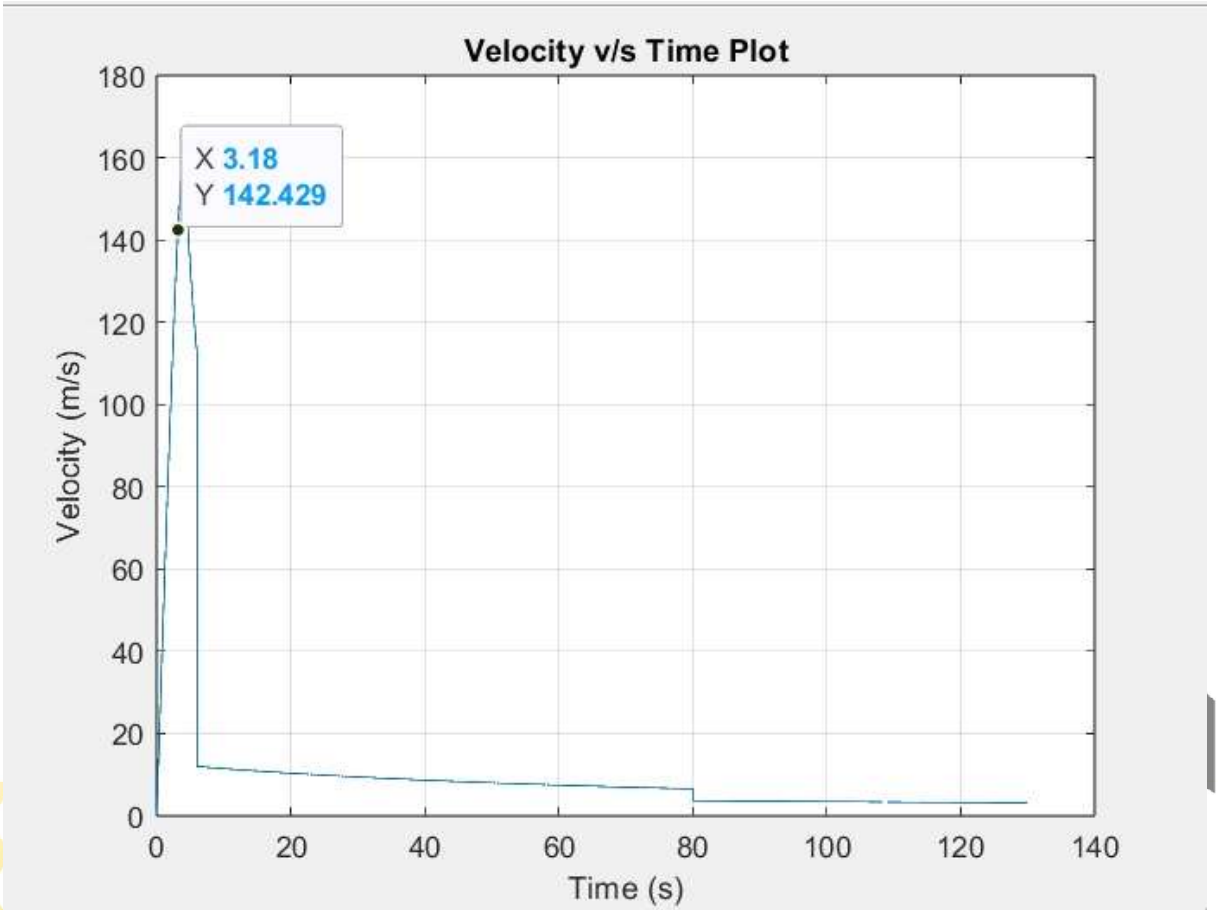

Figure : MATLAB Simulation Velocity vs Time at ideal Weather Conditions

7.2.3. Flight Acceleration

7.2.3.1. RockSim Simulation

Total Acceleration vs Time at Average Weather

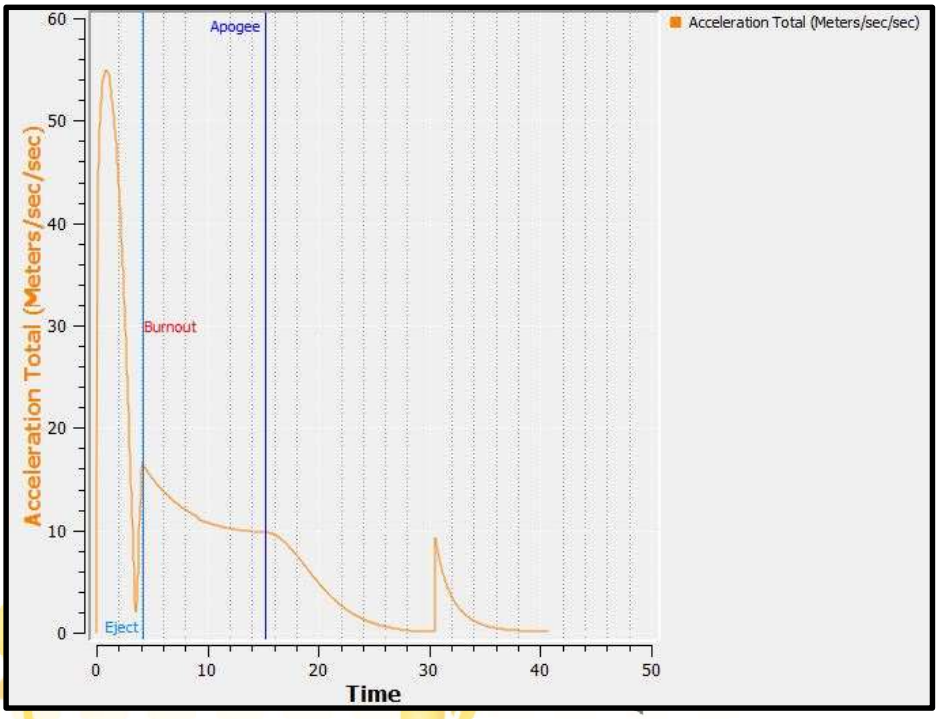

Figure : RockSim Simulation Total Acceleration vs Time at Average Weather Conditions

Total Acceleration vs Time at Maximum Weather

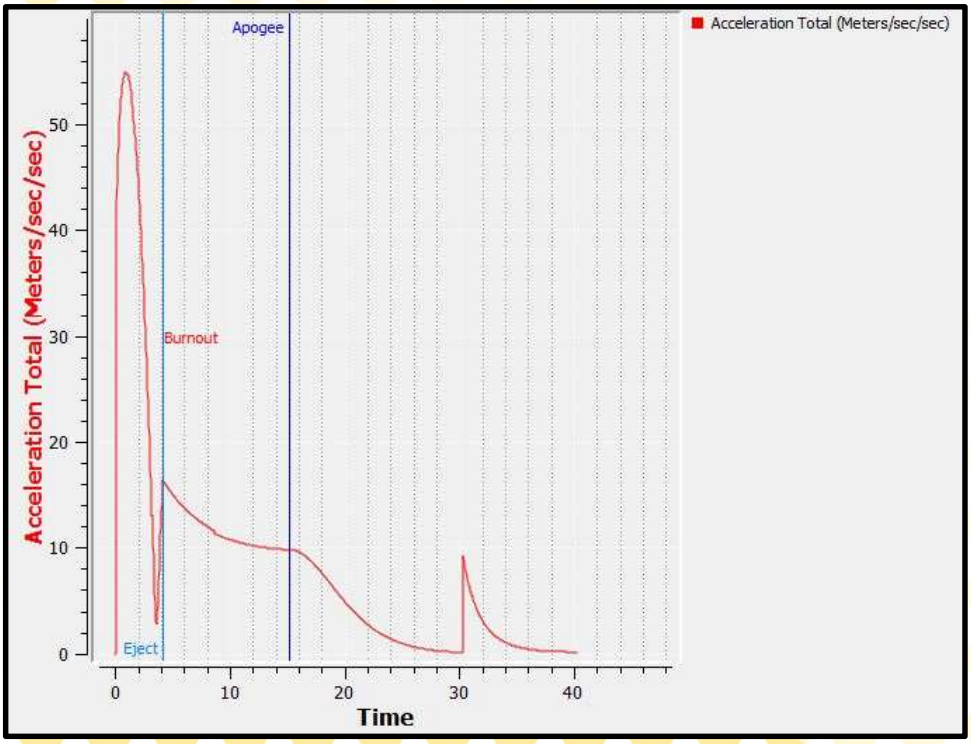

Figure : RockSim Simulation Total Acceleration vs Time at Maximum Weather Conditions

Table : RockSim Velocity Simulation

Parameters	Average	Maximum
Velocity	55 m/s	54.87 m/s

7.2.3.2. OpenRocket Simulations

Total Acceleration vs Time at Average Weather

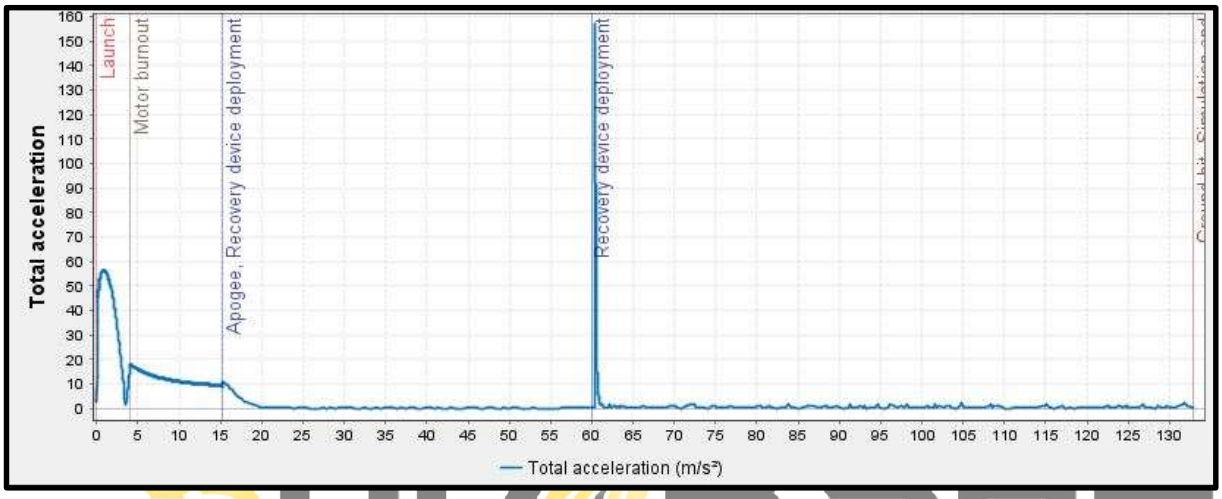

Figure : OpenRocket Simulation Total Acceleration vs Time at Average Weather Conditions

Total Acceleration vs Time at Maximum Weather

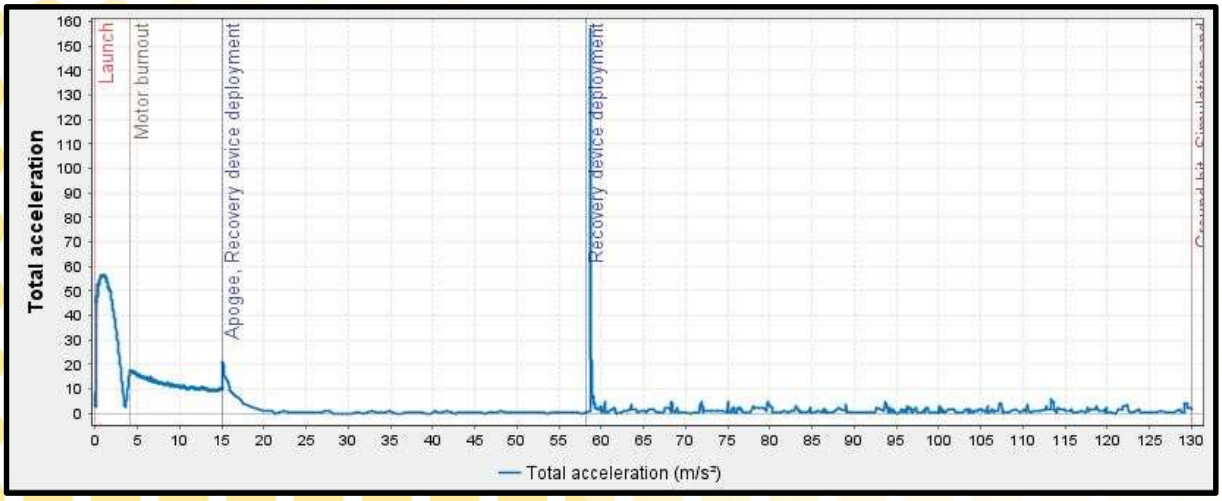

Figure : OpenRocket Simulation Total Acceleration vs Time at Maximum Weather Conditions

Table : OpenRocket Acceleration Simulation

Parameter	Average	Maximum
Total Acceleration	56.4 m/s²	55.3 m/s²

7.2.3.3. MATLAB Simulation

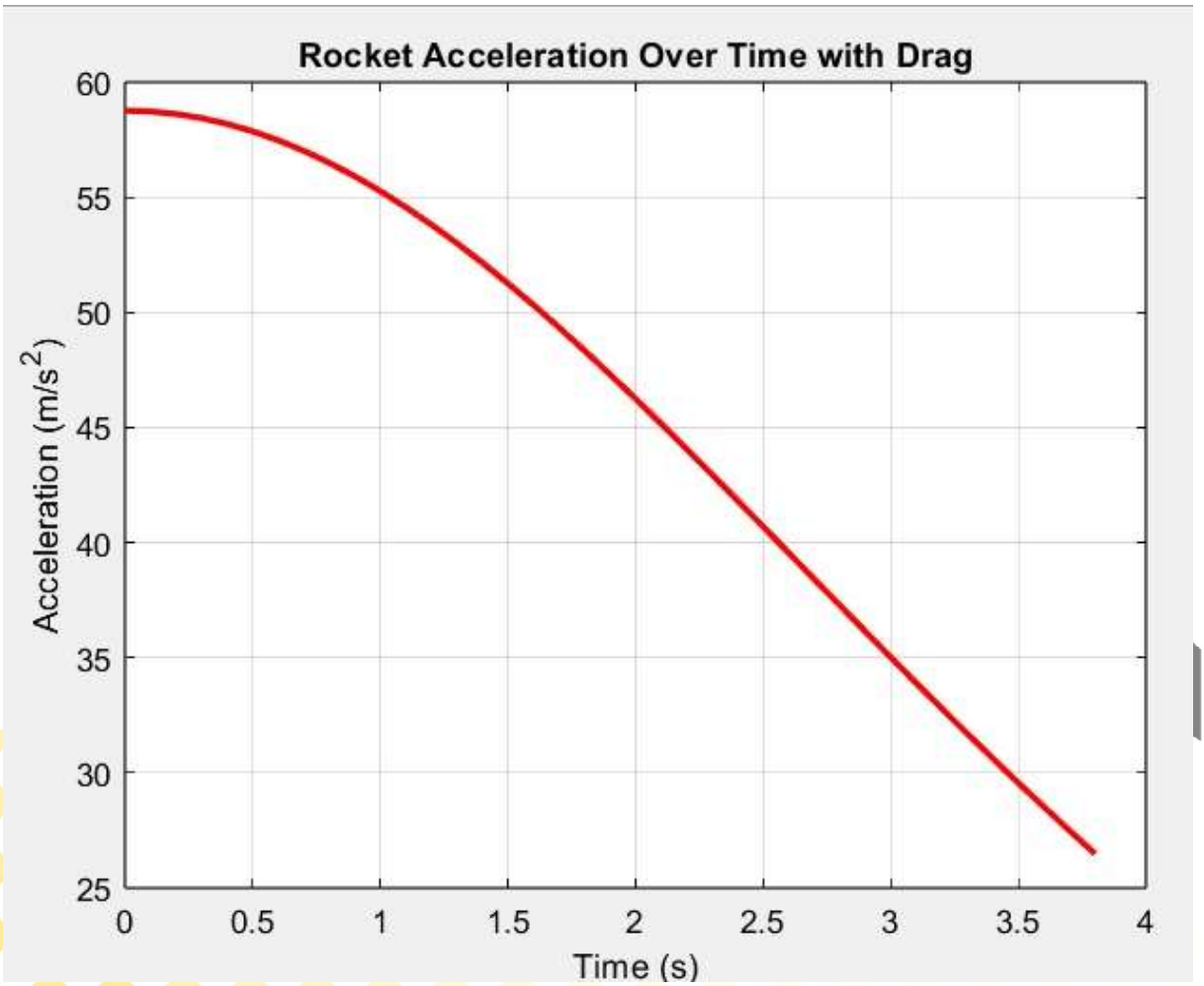

Figure : MATLAB Simulation Acceleration vs Time with drag

7.2.4. Drag Force

7.2.4.1. RockSim Simulation

Drag Force vs Time at average weather conditions

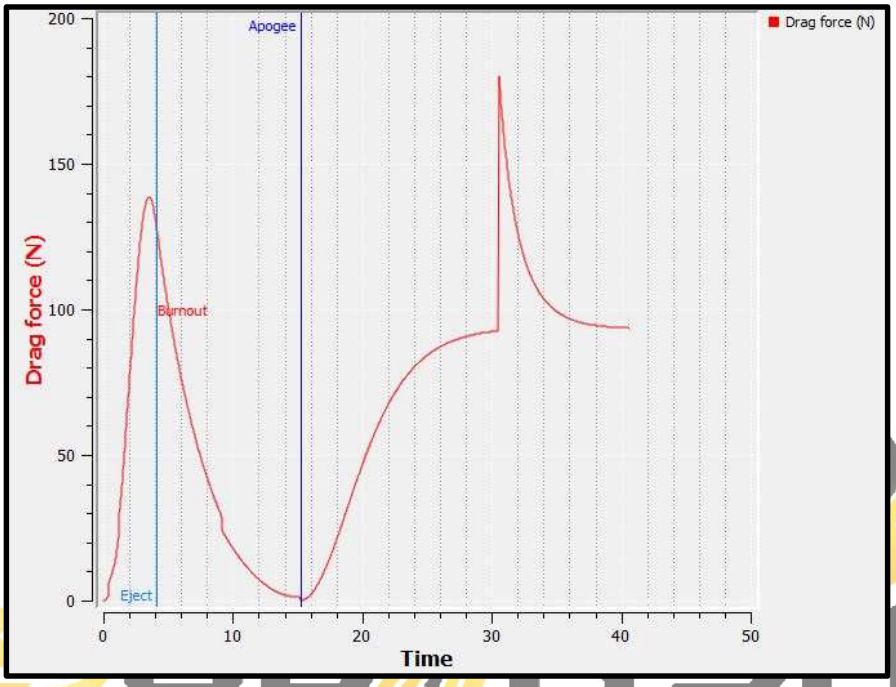

Figure : RockSim Simulation Drag Force vs Time at Average Weather Conditions

Drag Force vs Time at Maximum weather conditions

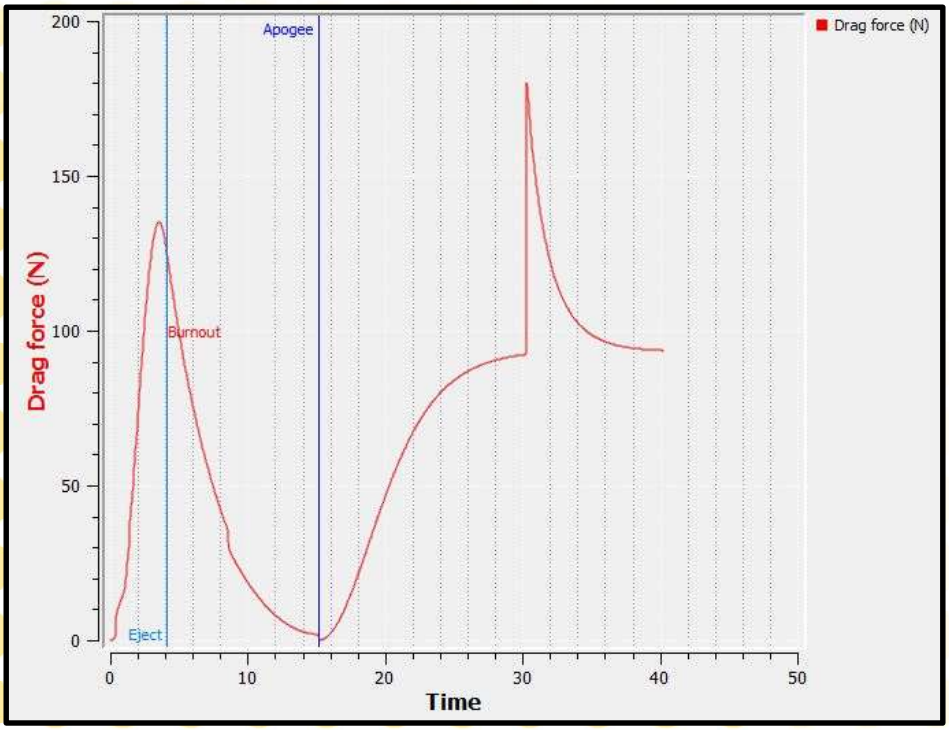

Figure : RockSim Simulation Drag Force vs Time at Maximum Weather Conditions

7.2.4.2. OpenRocket Simulations

Drag Force vs Time at average weather conditions

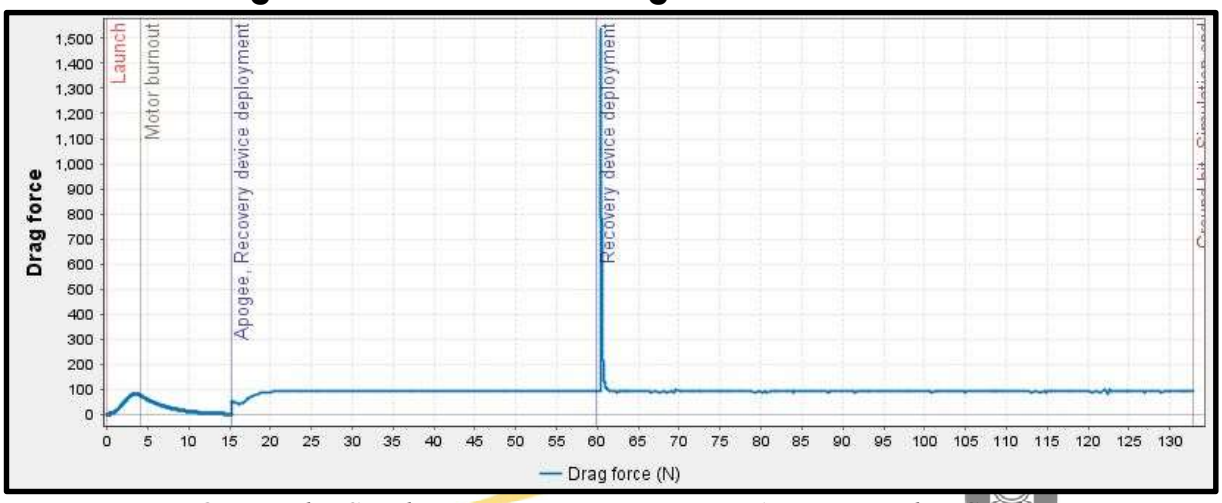

Figure : OpenRocket Simulation Drag Force vs Time at Average Weather Conditions

Drag Force vs Time at Maximum weather conditions

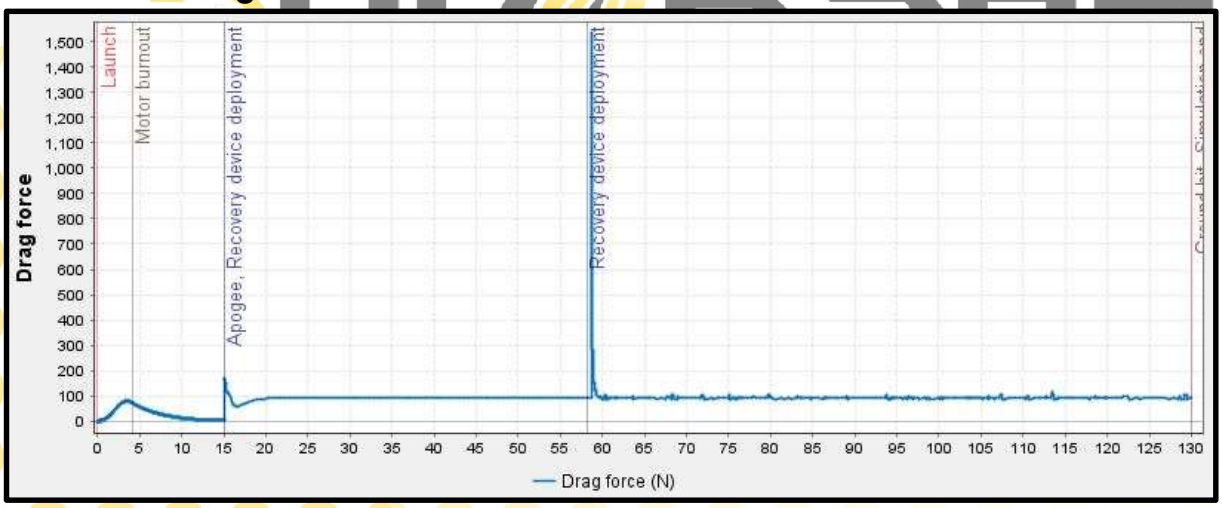

Figure : OpenRocket Simulation Drag Force vs Time at Maximum Weather Conditions

7.2.4.3. MATLAB Simulation

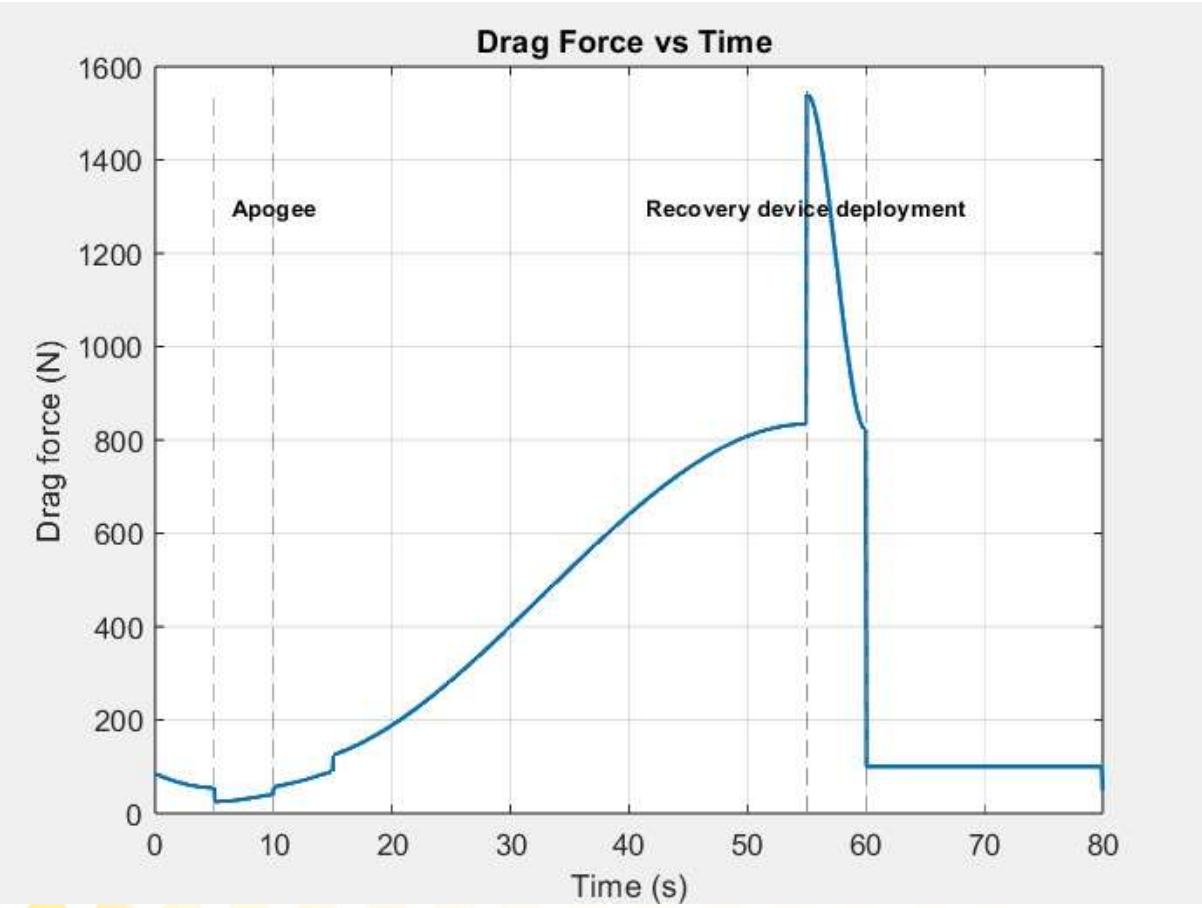

Figure : MATLAB Simulation Drag Force vs Time

7.2.5. Stability

7.2.5.1. RockSim Simulation

Static Stability Margin vs Time at average weather conditions

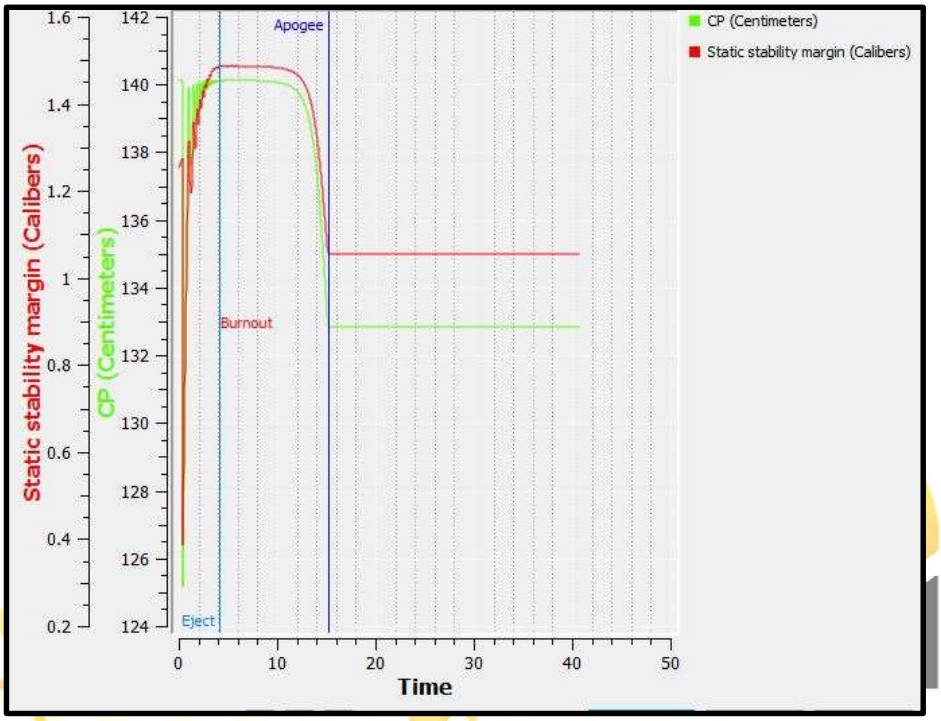

Figure : RockSim Simulation Static Stability Margin vs Time at Average Weather Conditions

Static Stability Margin vs Time at Maximum weather condition

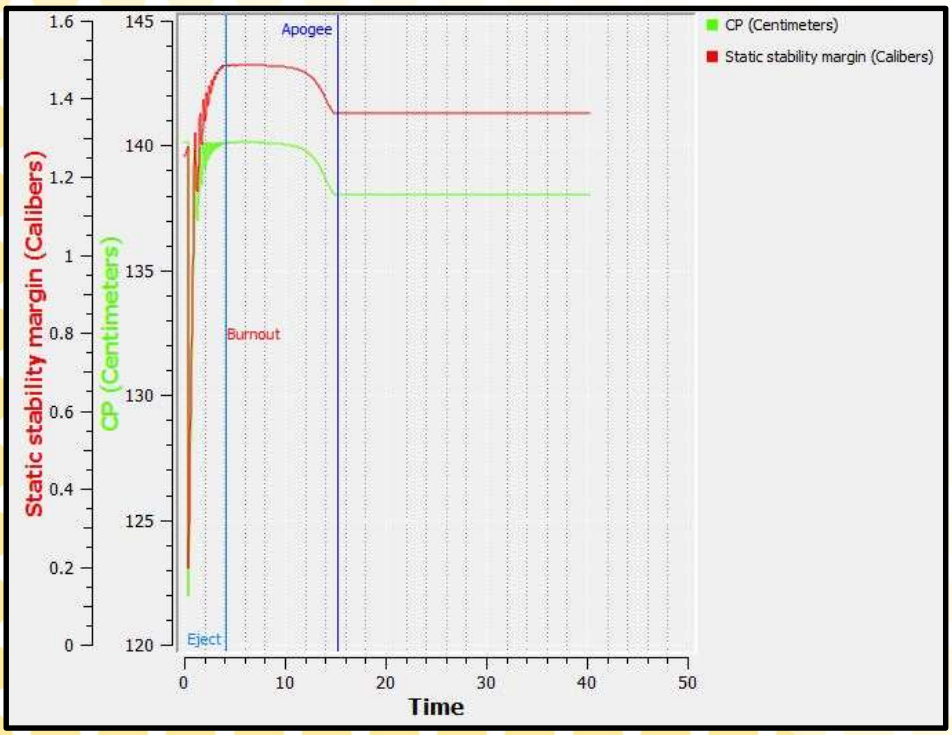

Figure : RockSim Simulation Static Stability Margin vs Time at Maximum Weather Conditions

7.2.5.2. OpenRocket Simulations

Stability Margin Caliber vs Time at average weather conditions

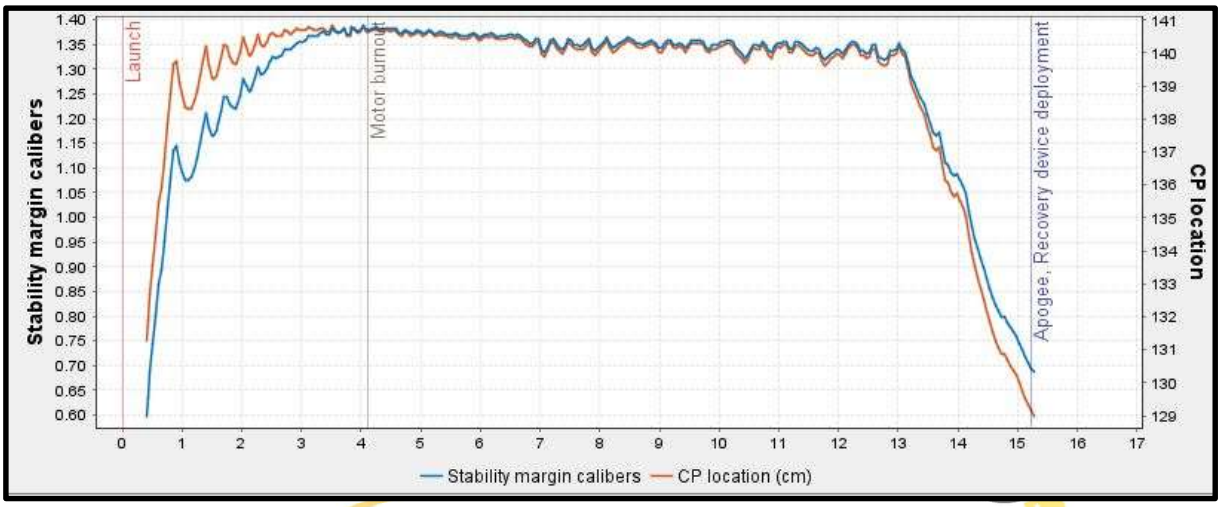

Figure : OpenRocket Simulation Stability Margin Caliber vs Time at Average Weather Conditions

Stability Margin Caliber vs Time at Maximum weather conditions

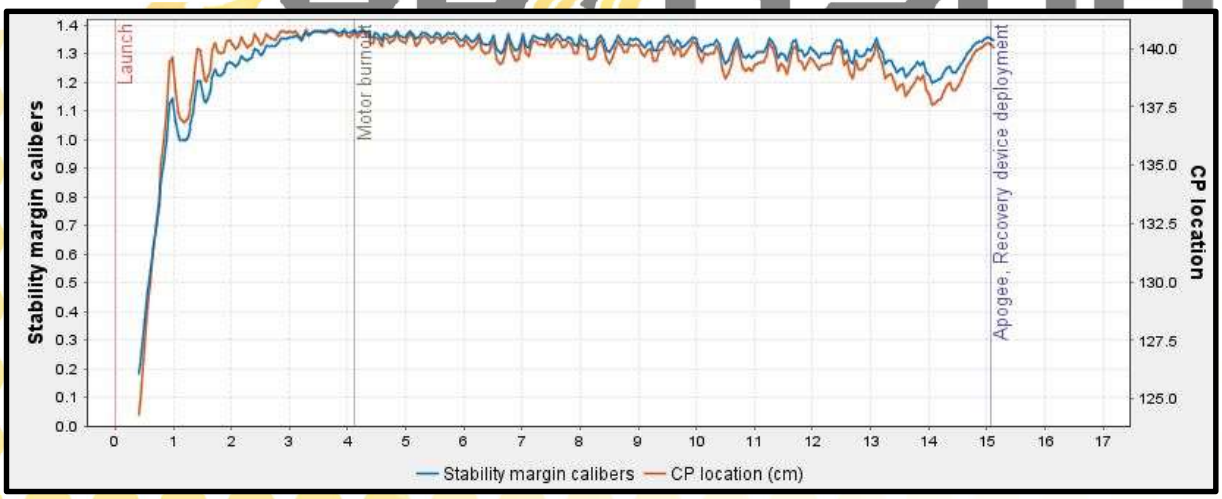

Figure : OpenRocket Simulation Stability Margin (Caliber) vs Time at Maximum Weather Conditions

Table : Maximum stability throughout the flight

Parameter	RockSim	OpenRocket
Stability Margin	1.49 Caliber	1.39 Caliber

7.2.6. Drag Coefficient

7.2.6.1. RockSim Simulation

Drag Coefficient at Ideal weather conditions

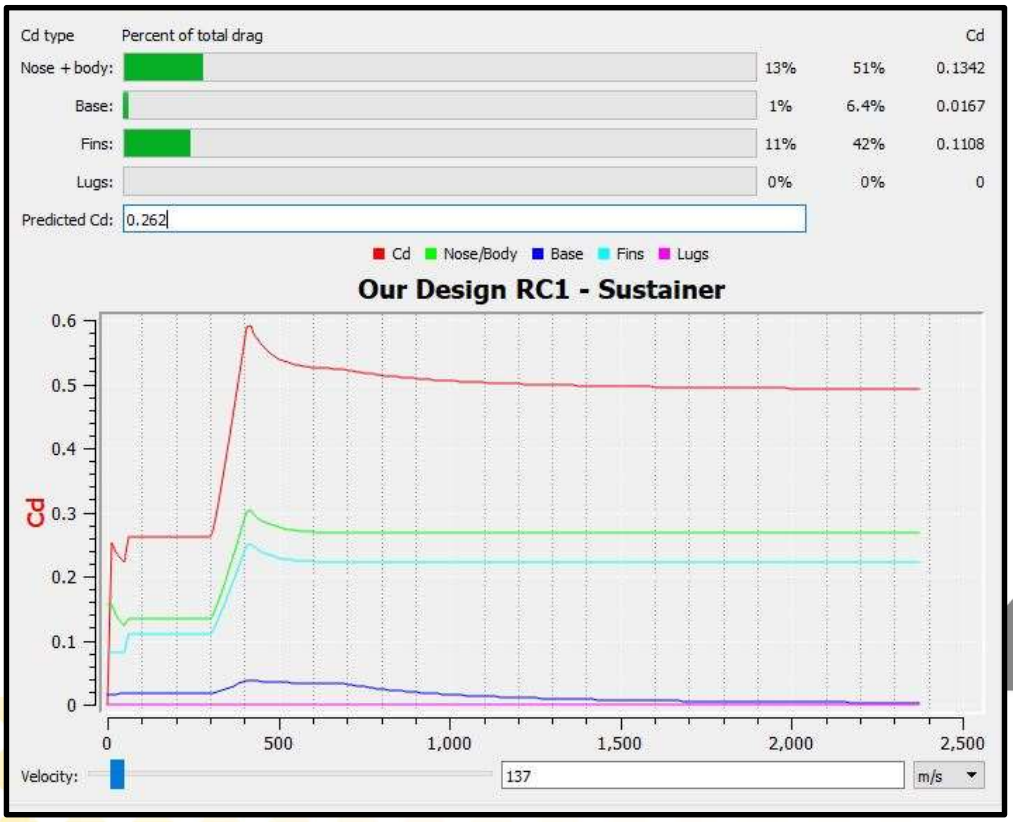

Figure : RockSim Simulation Drag Coefficient Average Weather Conditions

7.2.6.2. OpenRocket Simulation

Drag Coefficient at Ideal Weather Conditions

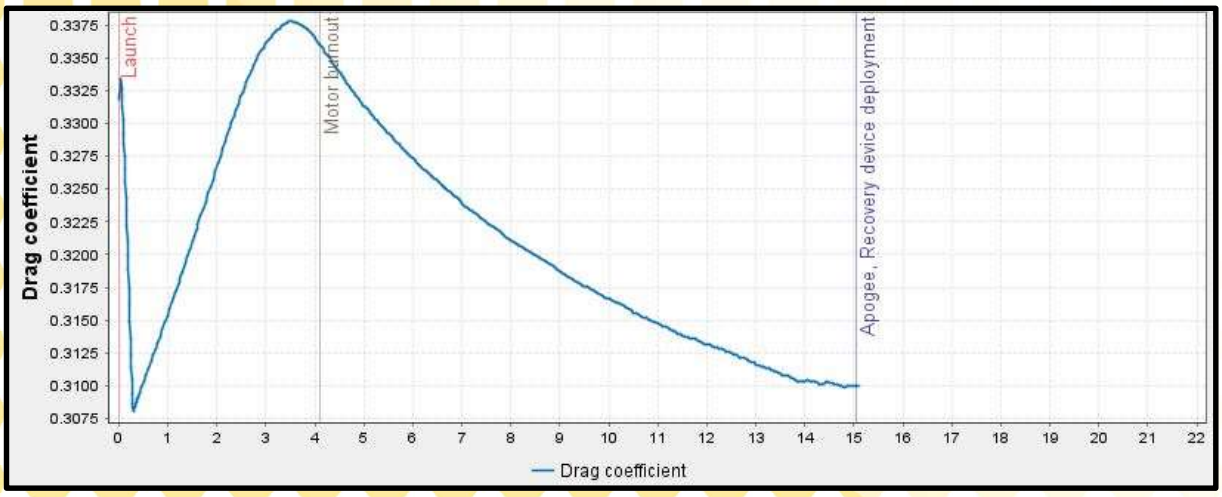

Figure : OpenRocket Simulation Drag Coefficient at Average Weather Conditions

7.3. Finite Element Analysis

7.3.1. Calculations

Barrowman Method of Calculating Normal Force

The normal (lateral) force acting upon a particular rocket component such as rocket body, nosecone, conical transition (such as shoulder or boattail) and fins due to non-zero angle of attack is calculated as such:

$$\boxed{N_C = q\,A\,\alpha(C_N\alpha)_C}$$

Where:

N_C = normal force, (lbf or Newtons)

c = particular component of interest (such as nosecone or fin)

q = dynamic pressure,

$$\boxed{q = \tfrac{1}{2}\rho V^2} \quad N/m^2$$

A = reference area = ¼ π D^2

where D = nosecone base diameter (in. or m)

V = vehicle velocity, ft/sec or m/s

$C_{N\,\alpha}$= slope of the normal force coefficient at α = 0 ($\partial C_N/\partial\alpha \mid \alpha=0$) (per radian)

∝=effective angle of attack

Calculations according to our Specifications: -

Units are in Newtons(N) and Metres(m)

$$\propto = 10^o = 0.1745\,radians$$

$$Diameter, d = 0.168m$$

$$Area, A = \frac{1}{4}\pi\,0.168^2$$

$$A = 0.022 m/s^2$$

Nosecone profile is ogive, hence

$$V = 140\ m/s$$

Air density = 1.225 kg/cu.metre

The dynamic pressure is therefore:

$$q = \frac{1}{2}\rho V^2$$

$$q = \frac{1}{2} \times 1.225 \times 140^2$$

$$\boxed{q = 12005 \mathrm{N/m^2}}$$

Now as Normal force,

$$N_C = q\ A\ \alpha(C_N\alpha)_C$$

$$\boxed{N_C = 12005 \times 0.022 \times 0.1745 \times (C_N\alpha)_C}$$

From Barrowman Method of Calculating Normal Force

for **nosecone $(C_N\alpha)_N$ = 2 radian,**

Normal Force on Nosecone

$$N_N = 12005 \times 0.022 \times 0.1745 \times 2$$

$$\boxed{N_N = 92.174\mathrm{N}}$$

For **conical transition $(C_N\alpha)_T$ = -0.634 radian,**

Normal force on Conical Transition

$$N_T = 12005 \times 0.022 \times 0.1745 \times 0.634$$

$$\boxed{N_T = -29.21\ \mathrm{N}}$$

For **Boattail $(C_N\alpha)_{BT}$ = -0.58 radian,**

Normal force on Boattail

$$N_{BT} = 12005 \times 0.022 \times 0.1745 \times 0.58$$

$$\boxed{N_{BT} = -26.73\ \mathrm{N}}$$

For **Fins $(C_N\alpha)_F$ = 11.011 radian,**

Normal Force on Fins

$$N_F = 12005 \times 0.022 \times 0.1745 \times 11.011$$

$$\boxed{N_F = 507.466\ \text{N}}$$

Normal Force on Whole body (Rocket),

$$N_R = 12005 \times 0.022 \times 0.1745 \times 11.79$$

$$\boxed{N_R = 543.36\,\text{N}}$$

Normal force on rocket by adding the normal force of components on rocket,

$$N_R = N_N + N_T + N_{BT} + N_F$$

$$N_R = 92.147 + (-29.21) + (-26.73) + 507.466$$

$$\boxed{N_R = 543.7\text{N}}$$

7.3.1. Individual Component Testing-Based on above calculations

(All Deformations shown below are magnified)

7.3.1.1. Nose Cone FEA

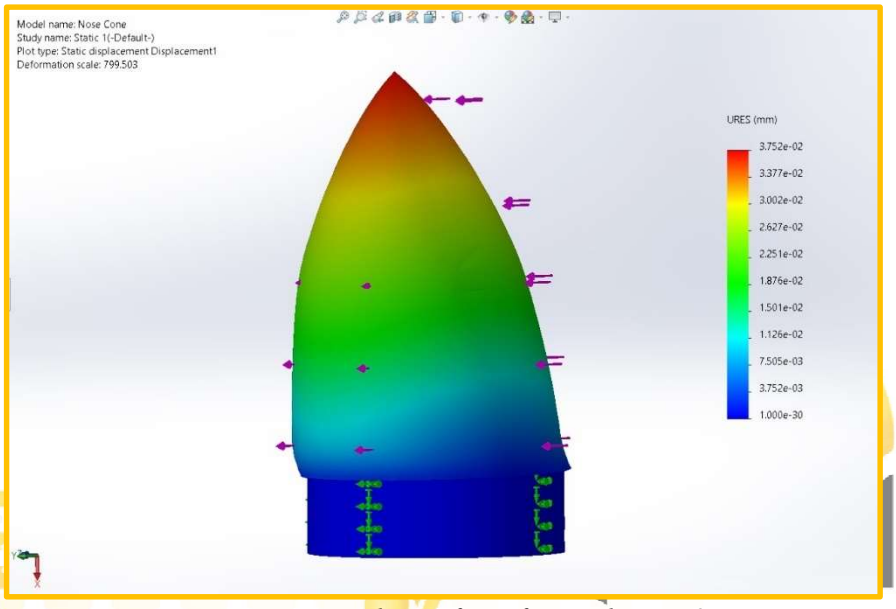

Figure: Nose cone simulation force from sideways 95 N

- No much deflection is observed

7.3.2.2. Boattail FEA

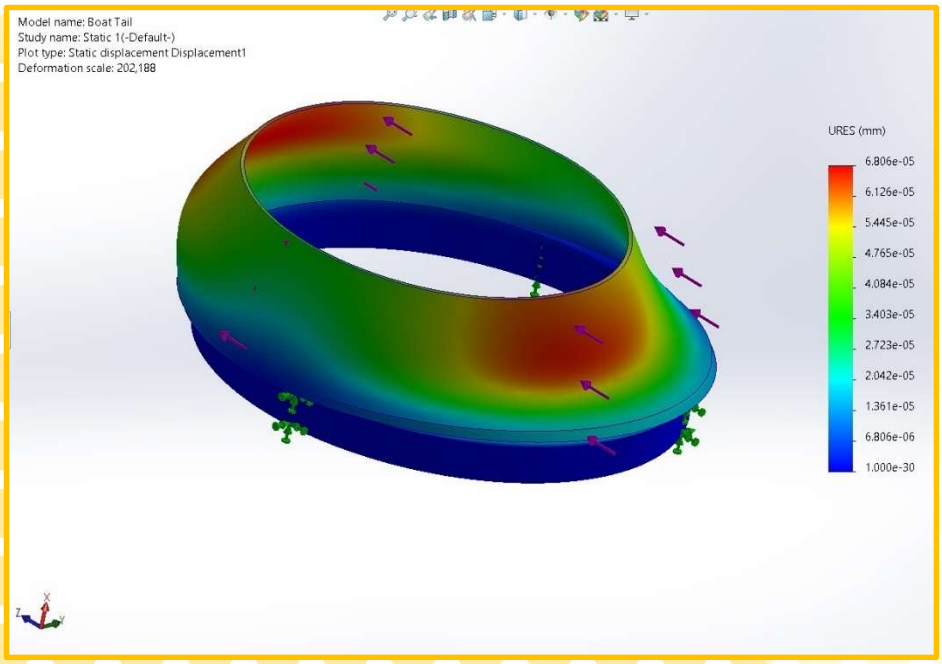

Figure : Boattail when 27 N Normal Force is applied from sideway

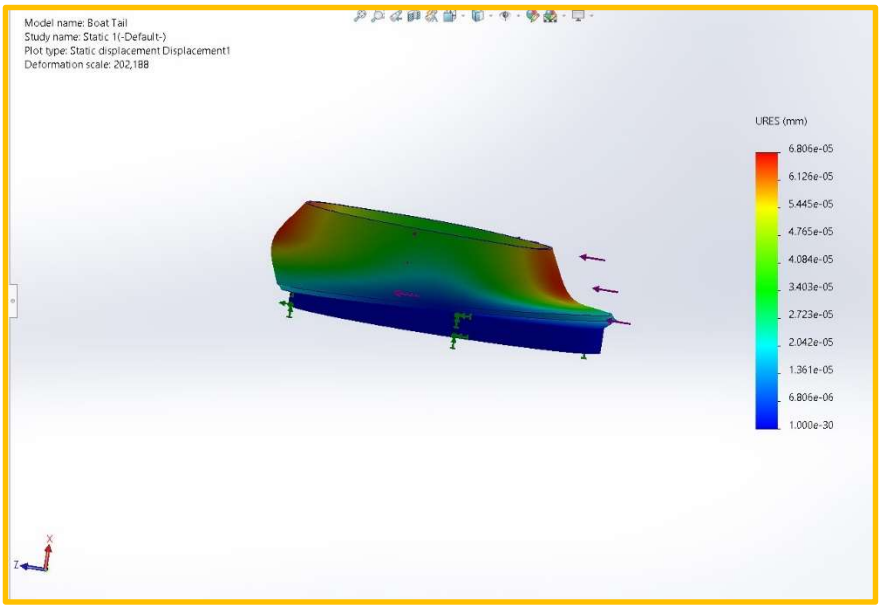

Figure:Boattail displacement configuration 2

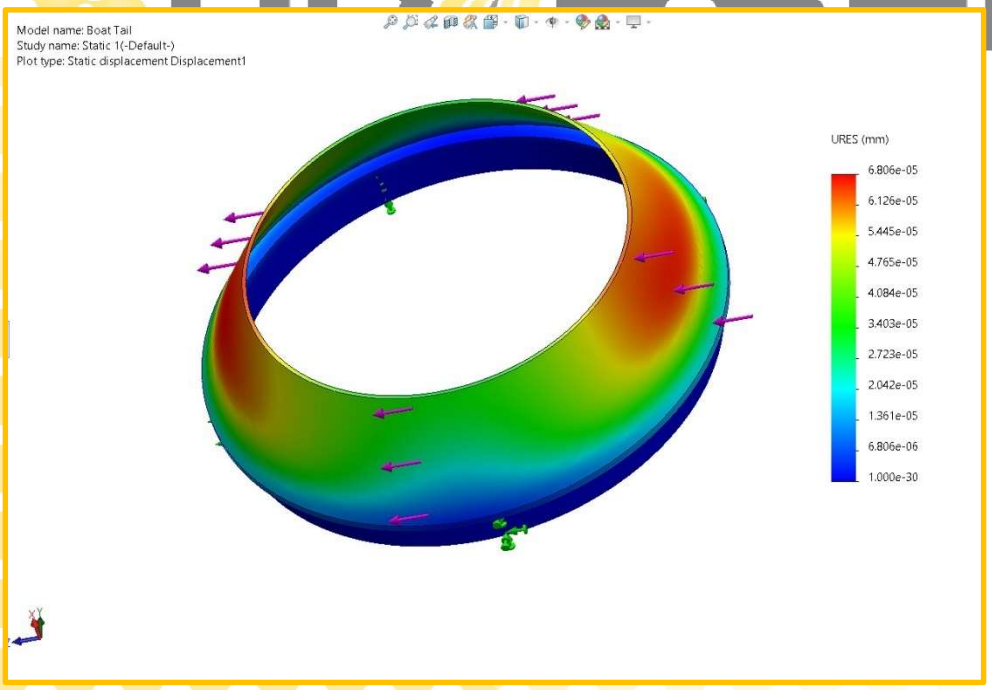

Figure : Boattail without deformation

7.3.2.3. Conical Transition FEA

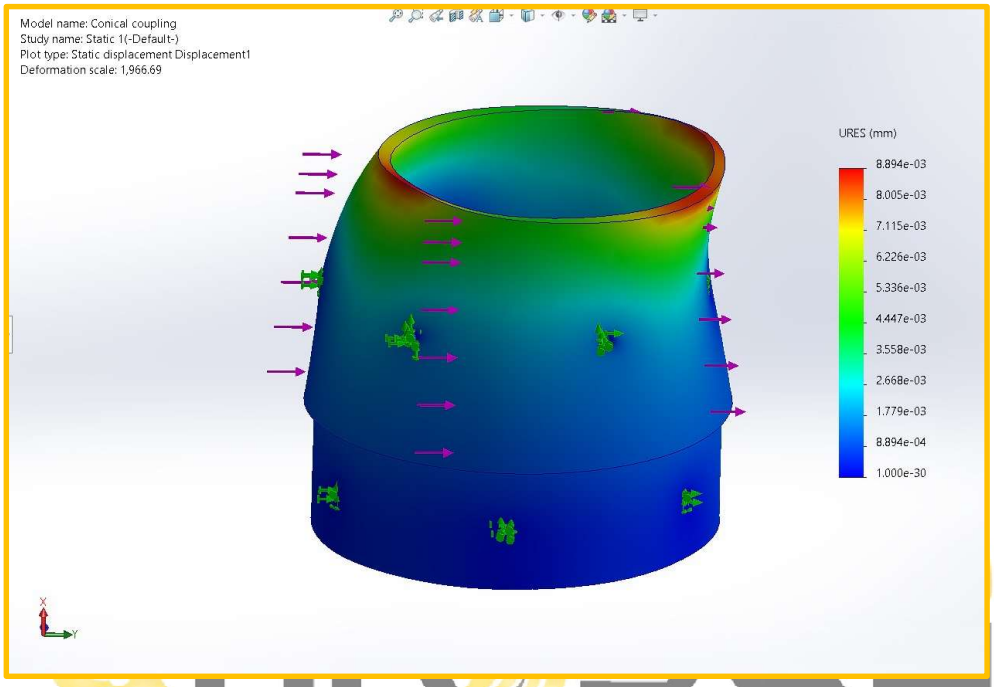

Figure : Conical Transition simulation at 30 N Normal Force

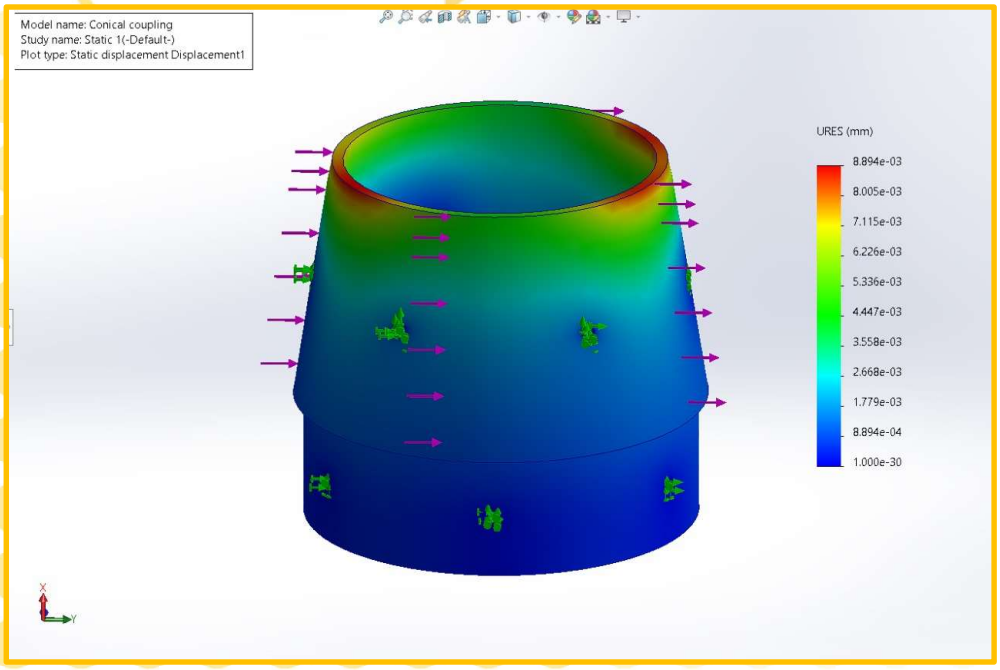

Figure : Conical transition without deformation

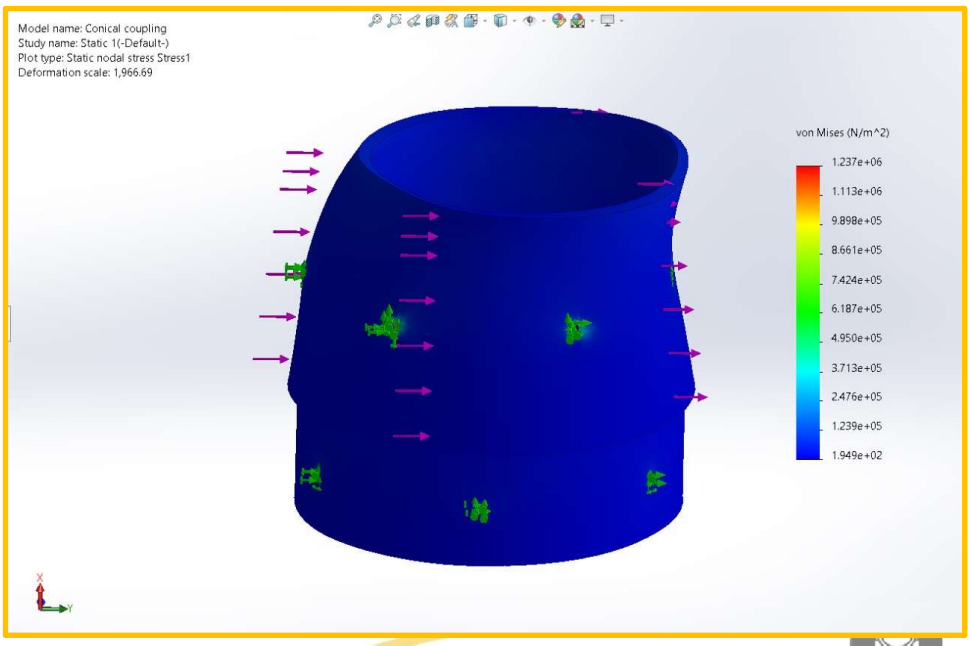

Figure : Conical Transition Simulation at 30 N Normal Stress Force

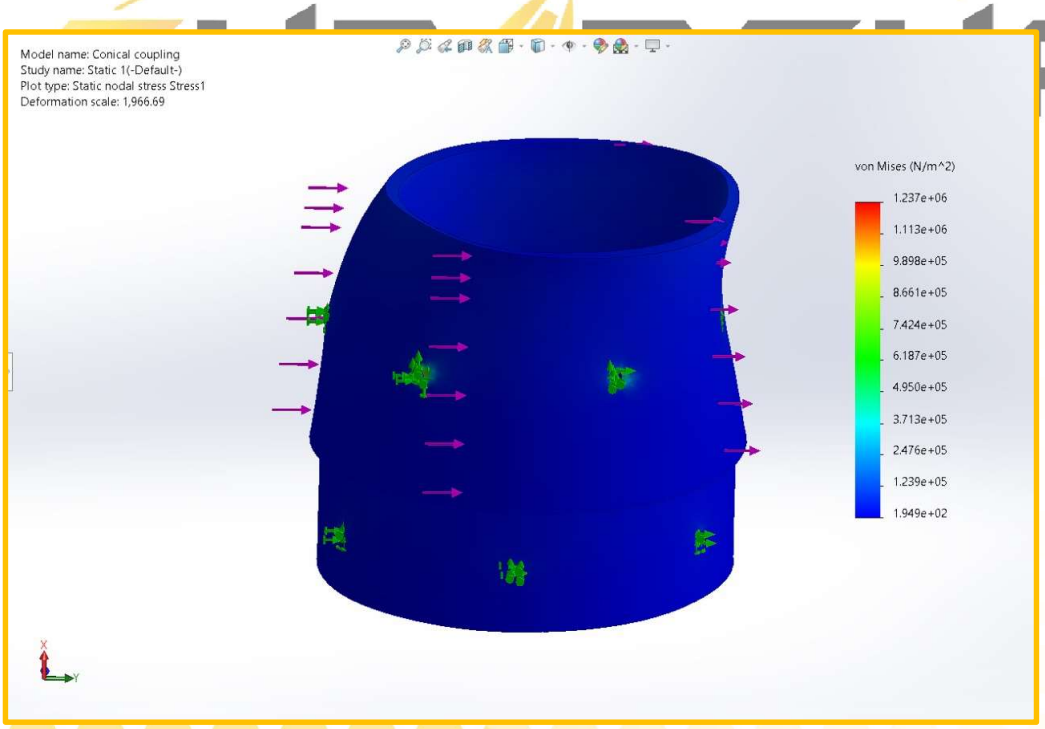

Figure : Conical Transition Simulation at 30 N Normal Strain Force

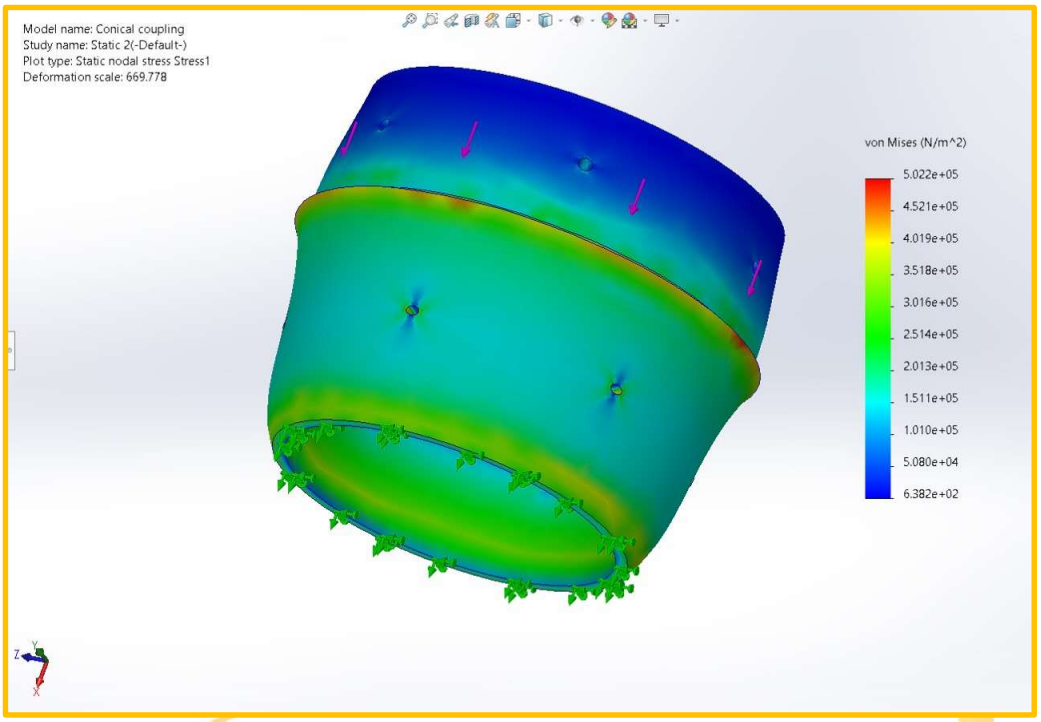

Figure : Conical Transition Simulation at 850N compressive load Stress

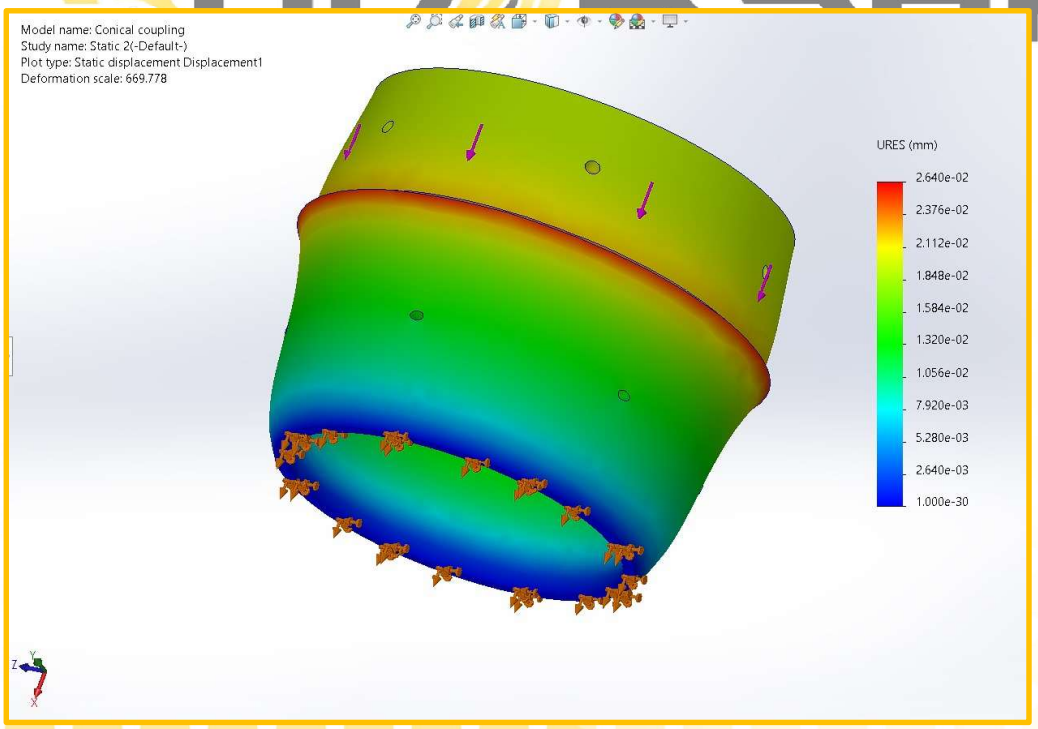

Figure : Conical Transition Simulation at 850N Compressive load displacement test

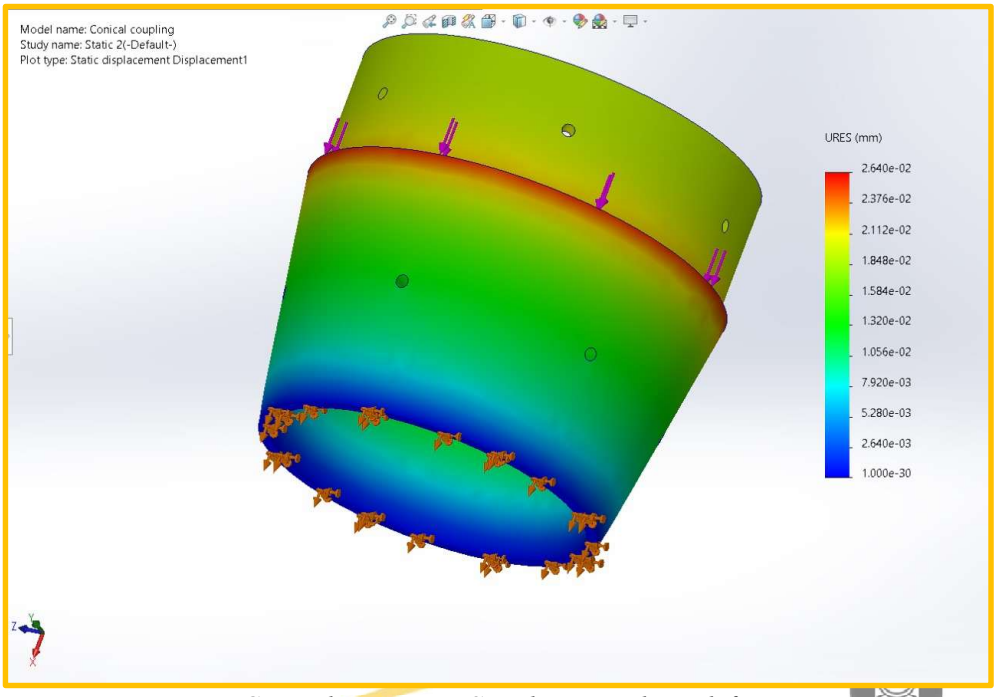

Figure : Conical Transition Simulation without deformation

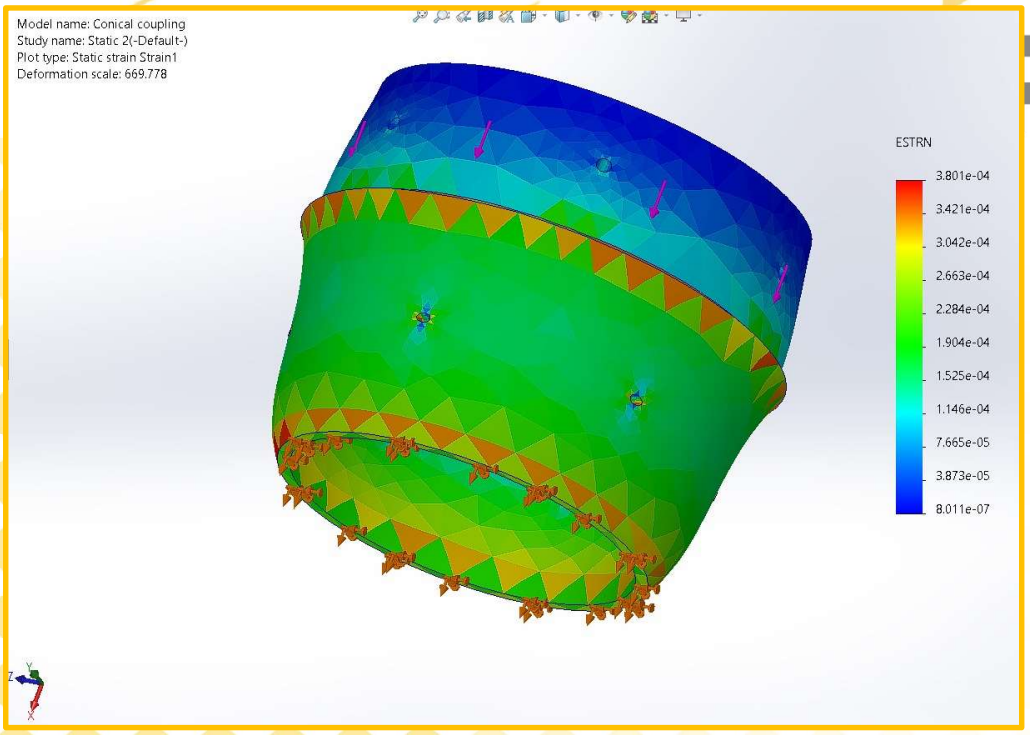

Figure : Conical Transition Simulation at 850 N Strain

7.3.2.4. Avionics Bay FEV

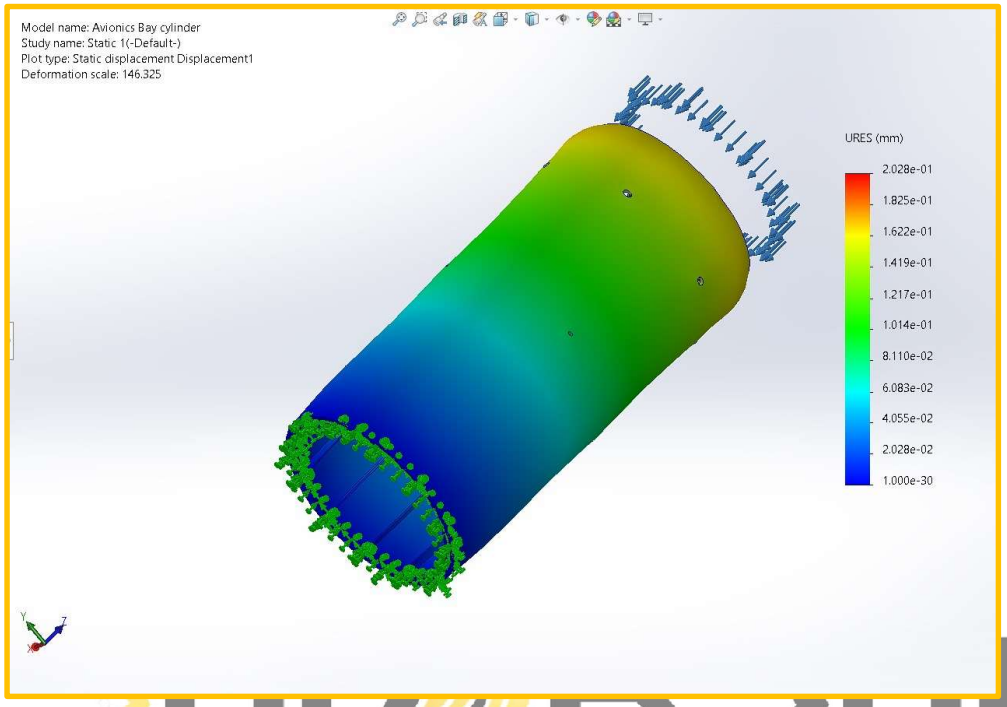

Figure : Avionics Bay Simulation for Compressive Displacement at 500N Stress

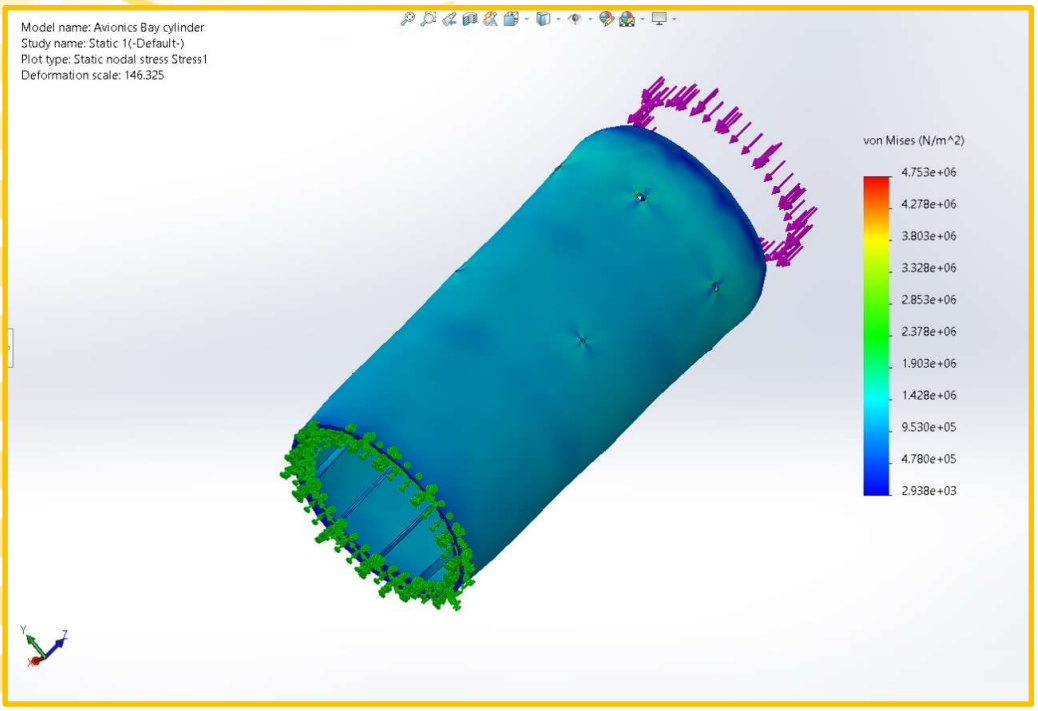

Figure : Avionics Bay Simulation for Compressive Displacement test at 500N

7.3.2.5. Thrust Plate FEA

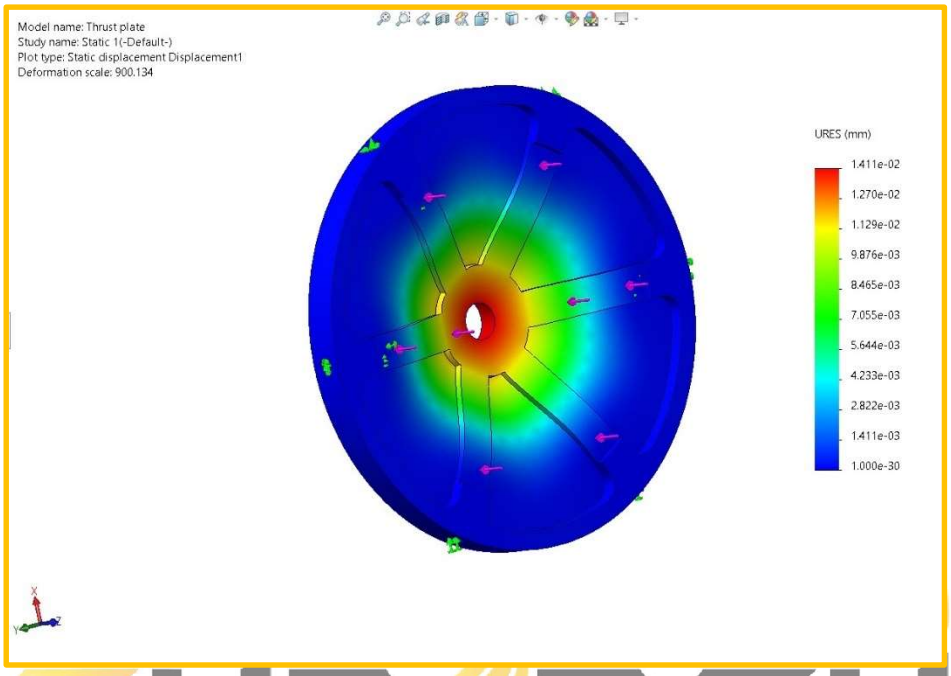

Figure : Thrust plate Simulation at 1000N Normal Force

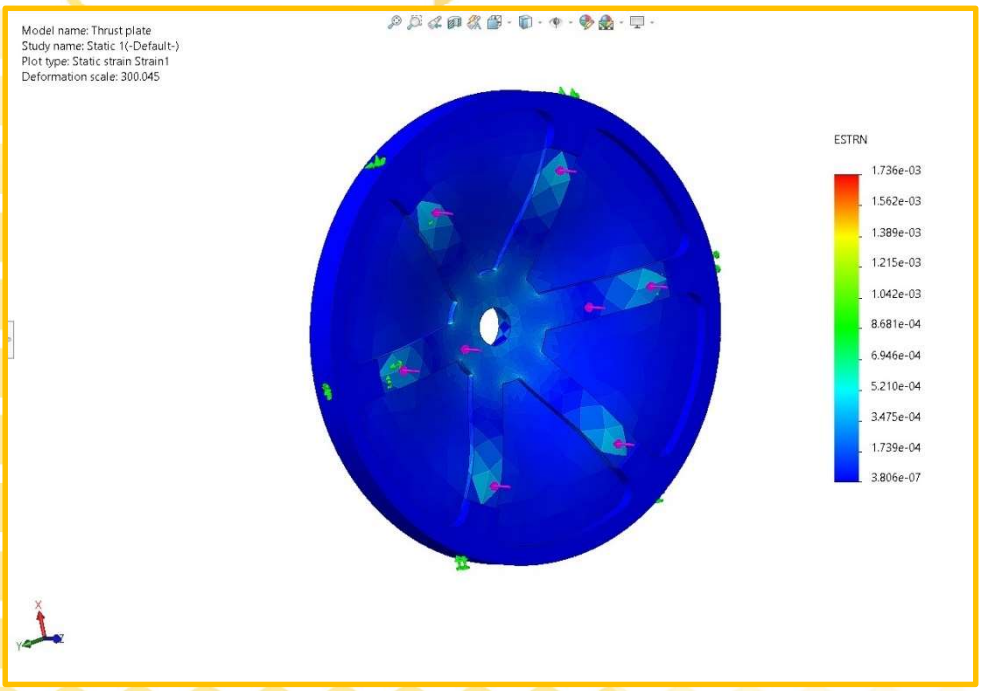

Figure : Thrust plate Simulation at 3000N Strain

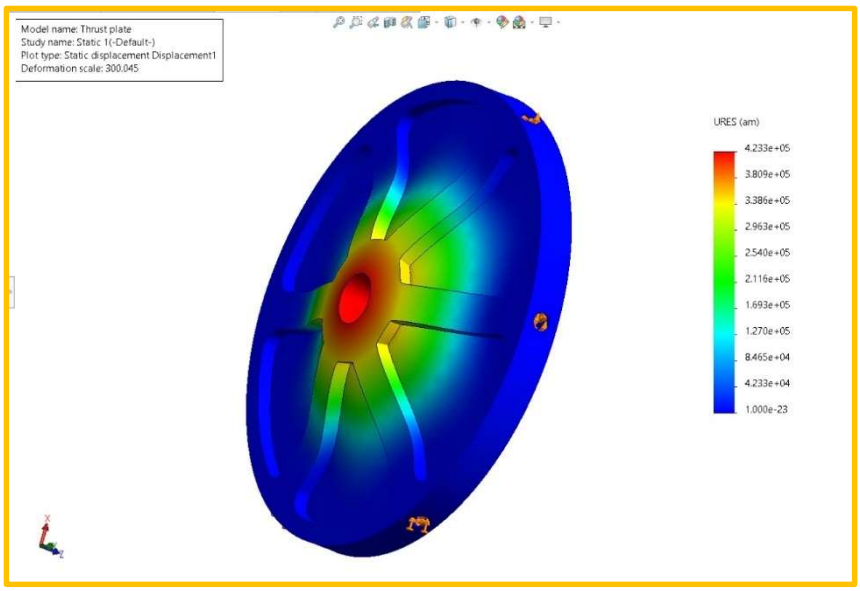

Figure : Thrust plate Simulation of resultant Displacement at 3000N

7.3.2.6. Avionics Support Rod FEA

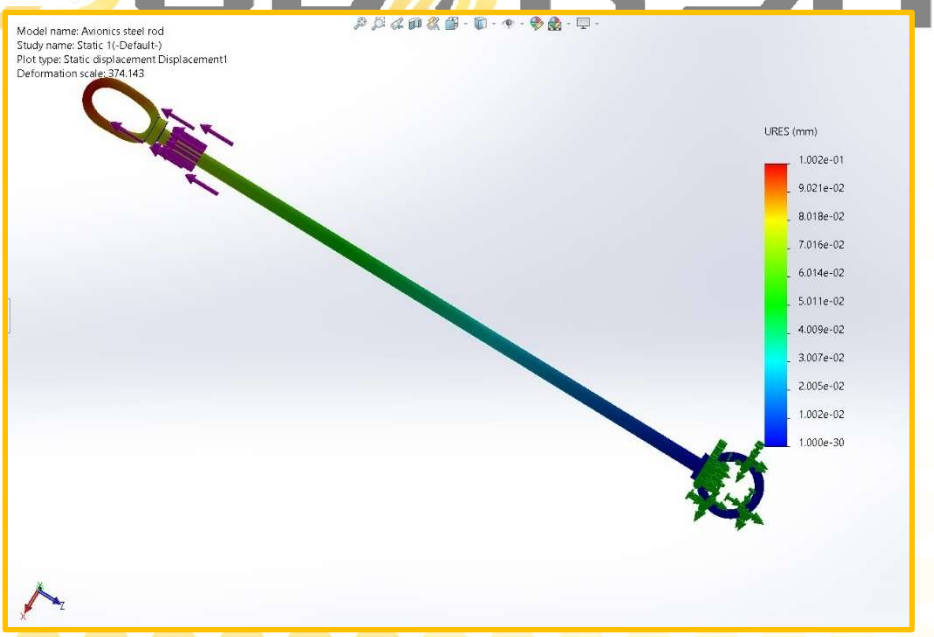

Figure : Avionics bay 15g shock test by applying 890N of tensile force

7.3.2.7. Lower Body Tube FEA

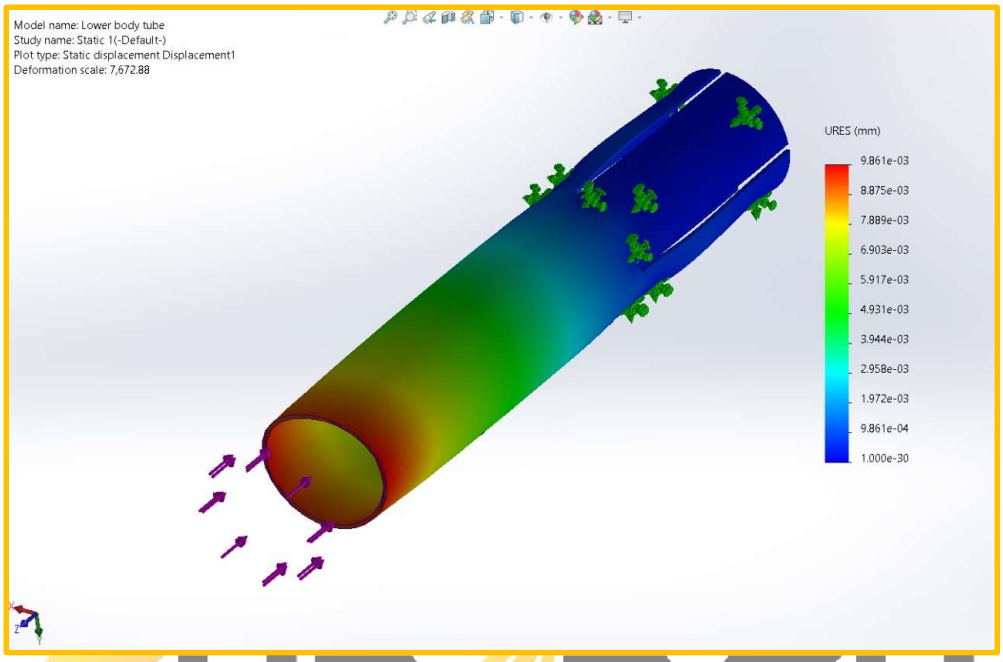

Figure : Lower body tube Simulation at 3000N Normal Force

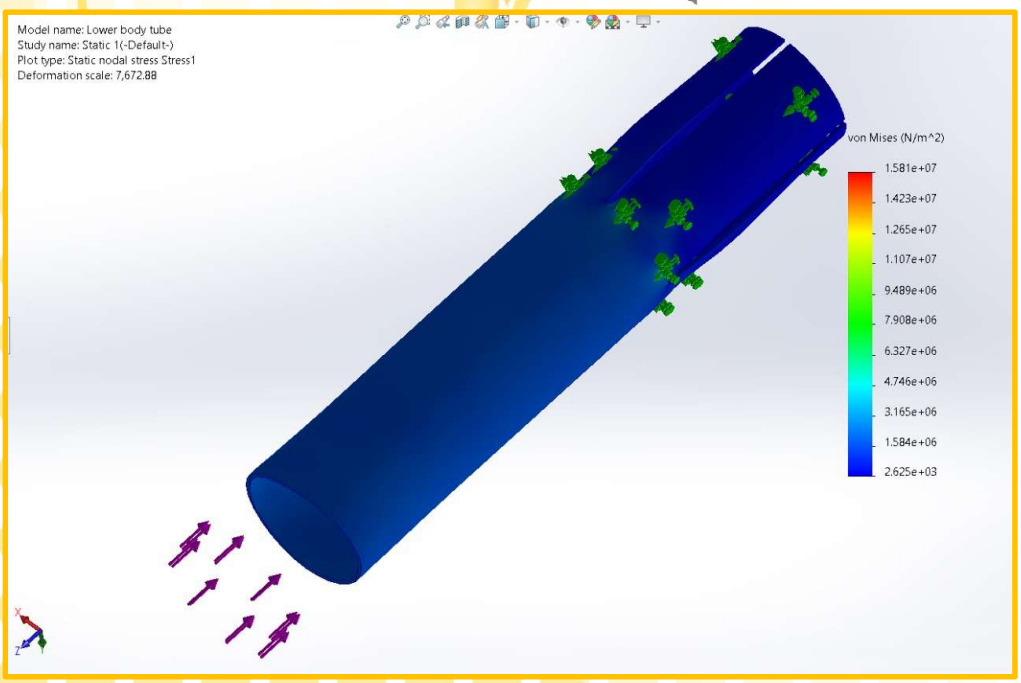

Figure : Lower body tube Simulation at 3000N Stress

8.Flight Software Description

8.1. Software Sequencing Timing Diagram

Components of the Diagram

The success of any flight software system depends on its ability to coordinate key tasks in a well-defined sequence. A timing diagram is an essential tool that maps out when specific software operations—such as sensor data acquisition, telemetry transmissions, and execution of telecommands—must take place relative to the flight phase. This includes:

- **Pre-launch phase**: Software initialisation, sensor checks, and communication setup with the ground station.
- **Launch and ascent**: High-frequency sensor sampling, real-time telemetry transmission, and tracking of critical flight metrics like velocity, altitude, and acceleration.
- **Descent and landing**: Monitoring the parachute deployment system, slowing sensor sampling, and shutting down non-essential processes to preserve power and data integrity.

The sequencing diagram ensures that operations happen in a coordinated, non-overlapping manner, which is crucial for the smooth functioning of the rocket during critical phases.

- **Global**:
  - Initializes Tkinter frames and widgets, setting up the graphical user interface components that will be used later on.

- **GUI**:
  - Responsible for calling the dashboard() function, which sets up the main components of the dashboard.
- **Dashboard**:
  - Once the dashboard is called, an empty graph is plotted using the plot_empty_graph() function.
  - Axes and canvas for plotting are appended to lists, which will likely be used for dynamic graph updates.
  - The launch Button is set up with the command to launch the system, which connects the GUI to the core launch sequence.
- **Plot**:
  - Handles the actual plotting of data.
  - plot_live_data() is used to set up the animation for real-time data visualization on the dashboard.
- **Launch**:
  - The launch process is set up, likely involving a countdown or preparation stage before starting the actual telemetry tracking.
- **Live Data**:
  - This section triggers the live data updates. The method live_Time() is invoked to update the display with real-time telemetry data.
- **Counter**:
  - Manages a count () function that starts in a new thread, keeping track of time.

- Updates T time (likely a variable representing telemetry time) and status variable label to reflect the system's current state.

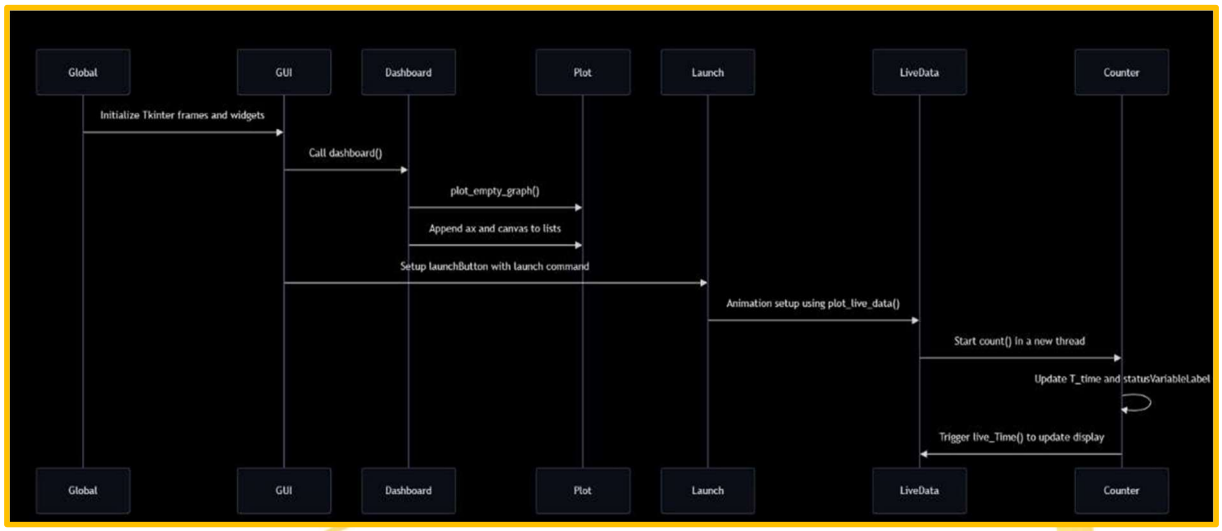

Figure : Software sequencing timing diagram

8.2. Sampling Rate

In-flight data from onboard sensors (accelerometers, gyroscopes, barometers, and temperature sensors) is gathered at a carefully calculated rate of 5 Hz (adjusted to actual rate). This high-frequency sampling ensures the rocket's rapid movements and environmental changes are captured with precision, allowing detailed analysis of the rocket's behaviour during ascent and descent.

Rationale for the Sampling Rate:

- **Real-Time Monitoring**: A sampling rate of 5 Hz ensures that critical flight parameters are updated frequently on the telemetry dashboard, allowing for real-time monitoring of the rocket's performance throughout the mission.

- **Hardware Constraints**: The selected sampling rate was chosen to balance the capabilities of the avionics hardware (e.g., sensors, microcontrollers) with the computational resources of the telemetry software. The sensors (such as an altimeter, accelerometer, and gyroscope) can provide data up to 100 Hz, but we have optimized the rate to 5 Hz to avoid overloading the system while maintaining data accuracy.
- **Data Processing and Visualization**: The telemetry software, developed using Python, Custom Tkinter, and Matplotlib, can process and display data in real-time at 5 Hz without delays in the graphical user interface. This ensures smooth graph rendering and responsive data updates without significant latency.

Effects of Sampling Rate on Telemetry:

- **Lower Sampling Rate:** If the sampling rate is reduced to, for example, 1 Hz, there may be a loss of detail in capturing fast-changing events, such as rapid changes in altitude or acceleration. This could potentially result in delayed or less accurate telemetry display.
- **Higher Sampling Rate**: A higher sampling rate, such as 20 Hz or more, could lead to more precise data collection, but it might also increase the load on the system's processing capabilities, potentially causing lag in data visualization and a higher data throughput load.

8.3. Telemetry and Telecommand Details

Telemetry refers to the automatic transmission of data from the rocket's sensors to the ground control station. Data includes key flight parameters such as altitude, velocity, orientation, temperature, and battery levels, which are critical for monitoring the rocket's status.

Telemetry Data Transmission:

- The onboard sensors continuously send data at the configured sampling rate of 5 Hz (five updates per second).
- Data is transmitted over a radio frequency (RF) link or other suitable communication systems to the ground station, where it is processed and displayed on the telemetry dashboard.
- Real-time data is visualized on a graphical interface for monitoring by the ground team, allowing for quick assessments of flight conditions.

Telecommand, on the other hand, allows ground operators to send control instructions back to the rocket. This is essential for mid-flight interventions, such as adjusting flight parameters, deploying parachutes, or triggering specific payload experiments. The software ensures smooth coordination between receiving telemetry data and executing telecommands to ensure real-time control during flight.

Telecommand Communication:

- The ground station sends commands over the same RF link used for telemetry or through a dedicated channel.
- Commands are processed in real-time by the rocket's onboard control system, which then executes the required actions.

8.4. Data Storage and Handling

Telemetry data from the rocket's sensors is stored locally during the flight and remotely for post f light analysis. The storage system is designed to handle the high volume of real-me data generated by the rocket's avionics, ensuring that no critical information on is lost, while also providing easy access for retrieval and visualization.

Local Data Logging:

- **Format**: CSV (Comma-Separated Values) format is used for local data logging. This format is lightweight, easy to read, and can be quickly parsed for post-flight analysis.
- **Purpose**: Local data logging acts as a backup to the real-me telemetry feed, ensuring that even if the live transmission is interrupted, a complete dataset can be retrieved a er the flight.

Remote Data Storage:

Primary Database: MongoDB is used for remote data storage because of its scalability and ability to handle large amounts of data. It is particularly suited for real-me telemetry data storage due to its flexibility and support for concurrent data writes and reads.

Advantages of MongoDB:

- **High Throughput**: Handles large volumes of data from multiple sensors without performance degradation.
- **Flexible Schema**: The NoSQL structure of MongoDB allows for easy handling of complex telemetry data, including nested data structures from different sensor systems.

- **Scalability**: MongoDB's horizontal scalability makes it ideal for expanding the data system to accommodate additional sensor data and higher telemetry rates in future missions.

Backup Cloud Storage:

Firebase is used as a secondary backup solution. It provides a secure cloud-based storage system, ensuring that all critical telemetry data is backed up remotely in case of a local system failure.

Limitations of Firebase:

- **Network Dependency**: Firebase's reliance on internet connectivity makes it less ideal for real-me operations, especially in situations where network conditions may be unstable or where rapid, low-latency data access is required.
- **Bandwidth**: Firebase's performance can degrade with high data transfer rates, making it be er suited as a backup solution rather than the primary real-me database.

8.5. Software reset loop

A key feature of the flight software is the **watchdog system**. This safety mechanism continuously monitors software performance. If any malfunction is detected (e.g., unresponsive sensors, memory overflows, or transmission errors), the watchdog triggers a software reset. This ensures that the system can recover autonomously and continue to operate with minimal downtime. The reset loop is designed to preserve essential flight data even after the reset,

allowing the software to resume from the last stable state without loss of critical information.

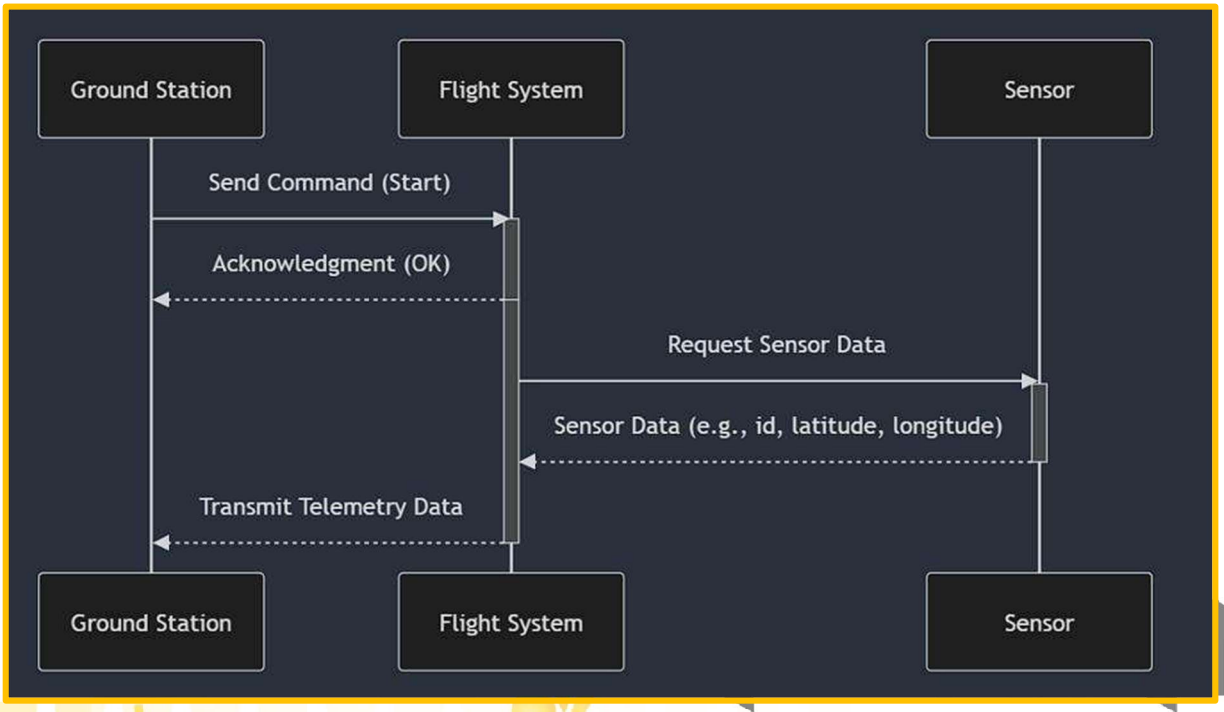

Figure : Software Reset Loop

8.6. Simulation Mode Strategy

Before flight, the flight software undergoes extensive testing in a simulation mode. This mode emulates real flight conditions by feeding virtual sensor data (generated by simulated physics engines) into the system. The simulated data mimics all aspects of a rocket launch, including sensor readings, telemetry transmission, and flight dynamics.

The simulation mode allows the development team to test and optimize:

- Sensor data handling and processing,
- Telemetry transmission under different conditions,

- Command execution timing,
- Real-time data collection and visualization.

By using simulated data, the team can uncover and resolve bugs in a controlled environment without risking hardware or flight failures.

8.7. Test Methodology

To ensure reliability, the flight software is subjected to a rigorous multi-phase testing process:

- **Unit testing**: Each software module (e.g., telemetry transmission, data logging) is tested independently to verify that it functions as expected.
- **Integration testing**: Once individual modules are verified, they are combined, and tests are run to ensure smooth interaction between all components.
- **System testing**: Full-system tests are conducted in simulated real-time flight environments. This includes verifying sensor inputs, telemetry outputs, and telecommand execution.
- **Field testing**: After successful lab simulations, the software is tested in sub-scale prototype rockets. This allows the team to observe its behaviour under real-world conditions and make necessary adjustments before full-scale deployment.

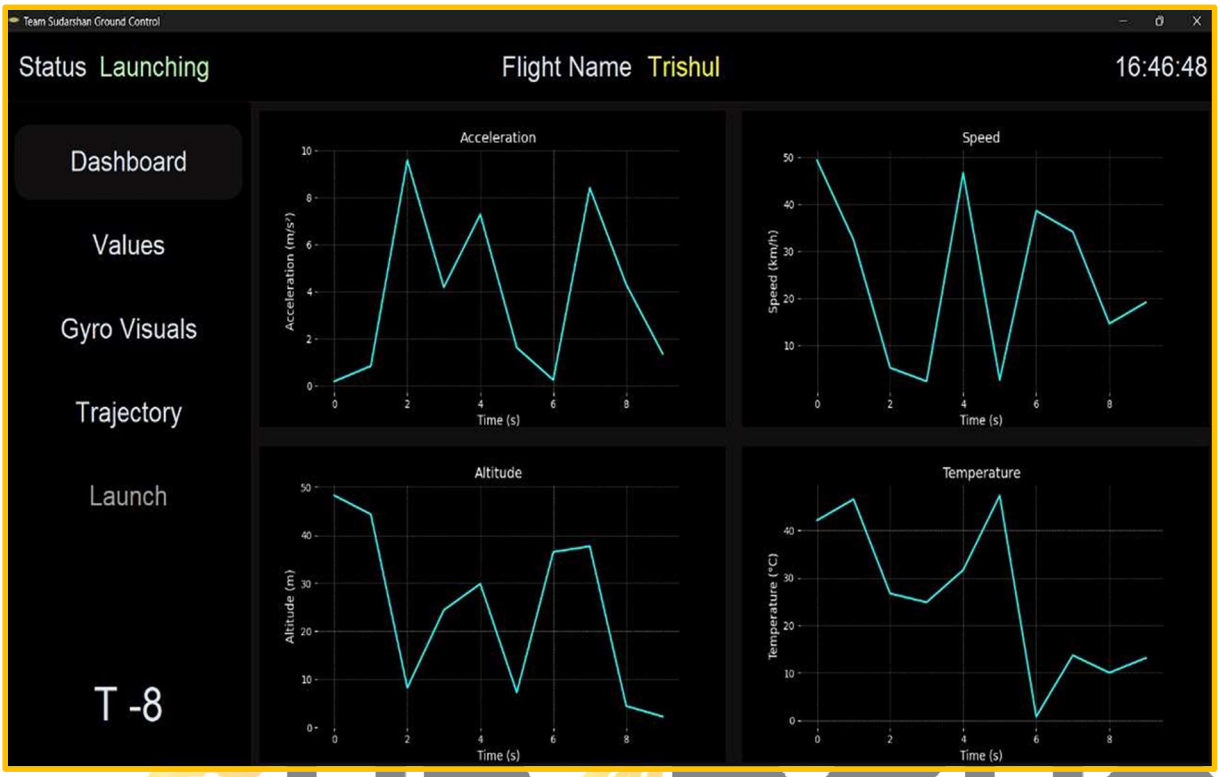

Figure : Unit Testing

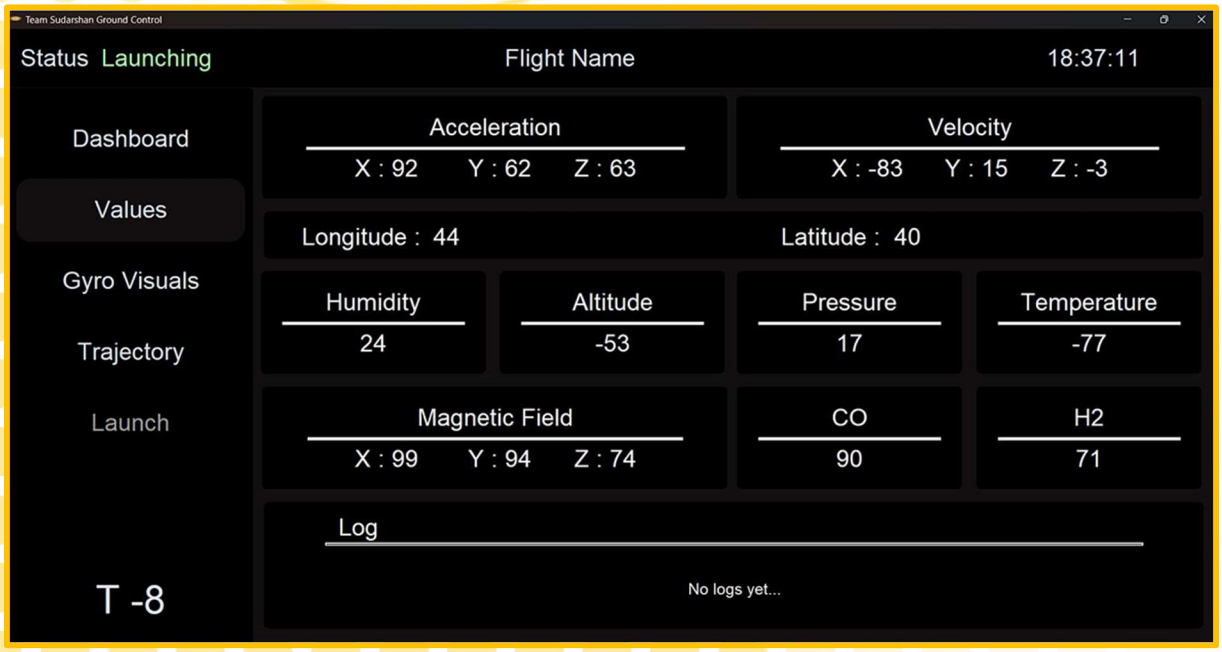

Figure: Integration Testing

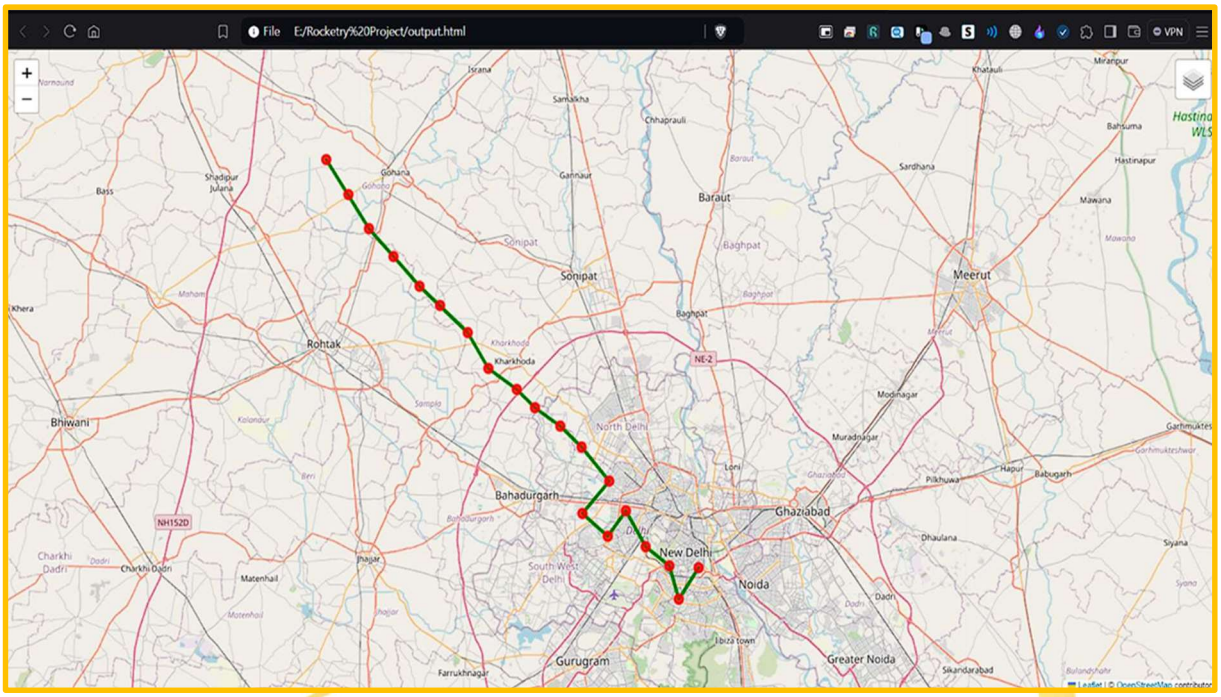

Figure: Field Testing

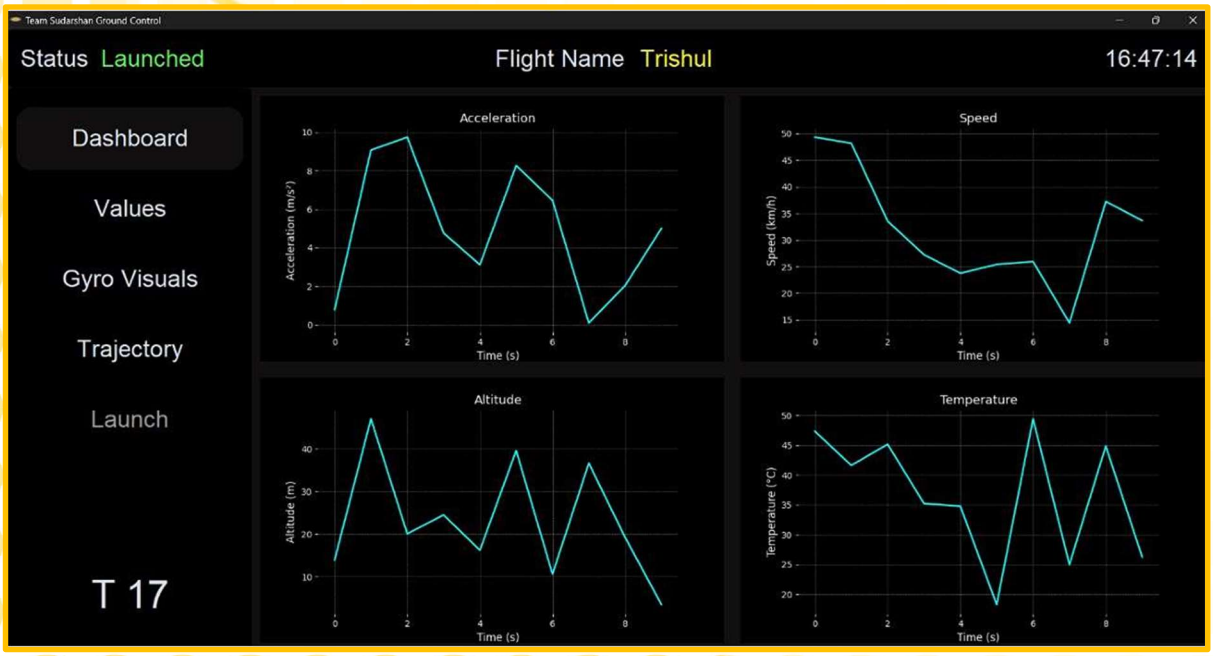

Figure : System Testing

8.8. Proto Version Testing

Early-stage testing of the software is conducted using smaller, sub-scale rocket models. These models replicate key features of the full-scale rocket but on a smaller scale, allowing the team to:

- Test telemetry and data transmission range,
- Verify the reliability of command execution in flight,
- Identify potential issues with sensor integration.

Proto version testing serves as a cost-effective way to identify and resolve any early-stage problems, ensuring that the final version of the software is robust and reliable.

9. Ground Control Station Design and Overview

9.1. Ground station power supply and duration of Operation

The **ground station** is essential for communication, telemetry reception, and tracking during the rocket's flight. Ensuring a reliable power supply is critical for continuous operation throughout the mission.

Duration of Operation

- **Estimate Power Consumption:**
  - Identify the power requirements of all ground station equipment (antenna systems, receivers, computers, telemetry decoders, etc.).
  - Typical consumption might range from **50W to 200W**, depending on complexity and equipment type.
- **Battery Capacity Calculation:**
  - For a **battery-powered system**, calculate required battery capacity using the formula:

$$\text{Battery Capacity (Ah)} = \frac{Poweer\ Consumption(W) \times Duration(hrs)}{Battery\ Voltage(V)}$$

  - Ensuring the battery has a slightly higher capacity than calculated for safety.
- **Operational Duration:**
  - Ensuring that power supply can sustain the station for the entire mission duration (from pre-launch setup to post-flight recovery). Typically, this is between 2 to 8 hours.

9.2. Antenna Type

For successful communication between the ground control station and the model rocket during its flight, the right antenna pattern and antenna type are critical.

Choosing the right antenna type ensures effective communication throughout the rocket's flight. The selection depends on flight range, altitude, and the frequencies used.

Table : Summary of Antenna Choices

Flight Scenario	Recommended Antenna Pattern	Recommended Antenna
Low-Altitude, Short-Range	Omni-Directional	Whip Antenna, Ground Plane
Mid-Altitude, Mid-Range	Omni-Directional / Moderate Directional	Patch Antenna, Ground Plane
High-Altitude, Long-Range	Directional (High-Gain)	Yagi Antenna, Helical Antenna

We are using a **directional antenna** instead of Omni-directional antenna because of its ability to transmit signal in a specific direction which increases range and strength in that direction.

The focused nature of the signal helps to minimize interference from unwanted signals coming from other directions. Actually, they are excellent in providing long range communication or point-to-point communication. On the other hand, Omni-directional antennas, while they cover a wide area coverage, the effective range is less as compared to directional antenna.

It is also more prone to interference from other signal due to its signal being transmitted in all directions.

Our team is using a **Yagi uda antenna (Yagi antenna)** which is a directional antenna and has a gain of **12 dbi.** We are using antenna of this much gain because in model rocketry the rocket would ascend with a high speed and accordingly, we have to align antenna in that direction for successful retrieval of data due to its narrow beam. If we would use antenna of higher gain then the focus of the antenna would become narrower making it difficult to catch the signals being transmitted by the rocket.

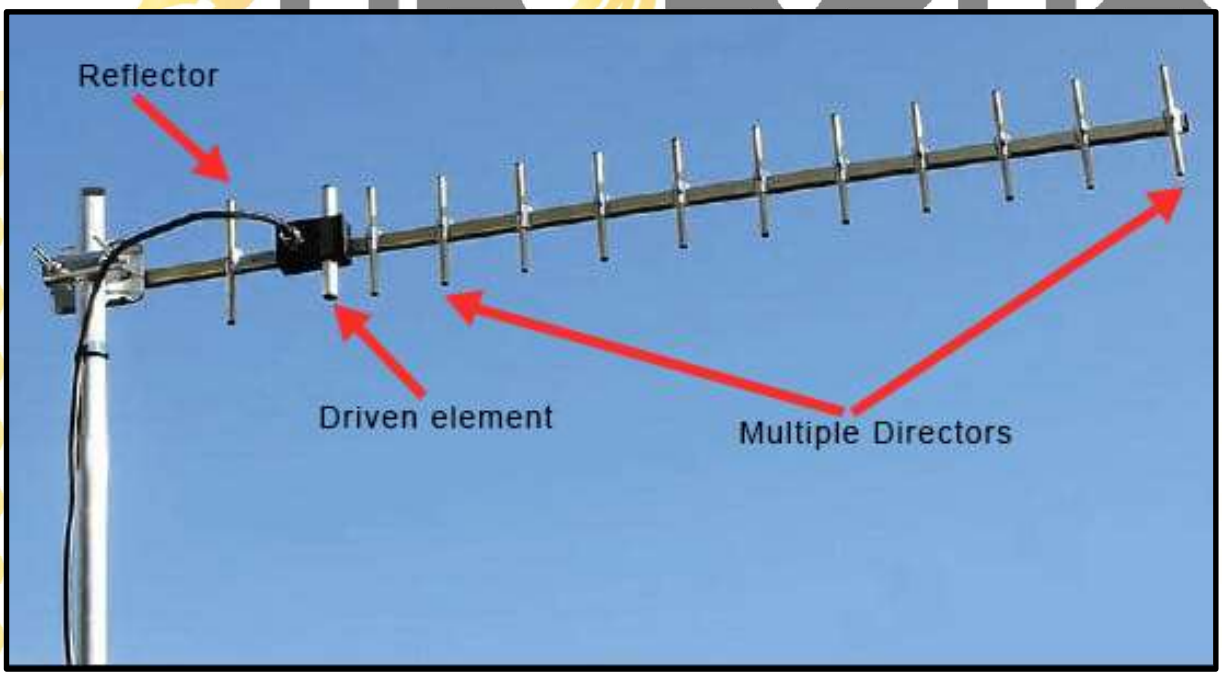

Figure : A Yagi Uda Antenna

Key Components of a Yagi-Uda Antenna:

1. **Driven Element:**
   - Typically, a half-wave dipole that transmits and receives the signal. It is the primary active element connected to the transmitter or receiver.
2. **Directors:**
   - One or more shorter elements placed in front of the driven element that focus the signal in a forward direction, increasing gain and signal strength.
3. **Reflector:**
   - A larger element placed behind the driven element that reflects the signal forward, helping to prevent signal loss in the opposite direction.
4. **Boom:**
   - A horizontal support structure that holds the elements in place and aligns them for optimal performance.

Typical Frequency Range:

The Yagi-Uda antenna is commonly used in model rocketry for the following frequency bands:

- **433 MHz** (UHF, commonly used for telemetry and data transmission)
- **900 MHz**
- **2.4 GHz** (popular for video transmission and some telemetry systems)

9.3. Antenna Pattern

The **antenna pattern** describes how the antenna radiates or receives signals in different directions. The ideal pattern for model rocketry ensures reliable communication as the rocket moves through various altitudes and positions relative to the ground station.

A **Yagi-Uda antenna** is a highly directional antenna that is commonly used in ground control stations for model rocketry, particularly when high-altitude or long-range communication is required. It consists of multiple elements that focus the signal in a specific direction, providing high gain and extended range.

The **radiation pattern** of the Yagi-Uda antenna is highly **directional**, meaning it focuses its signal in a narrow beam in the forward direction, with minimal radiation in other directions. This is ideal for maintaining a strong connection with a rocket as it ascends or travels away from the ground control station.

Radiation Pattern Diagram:

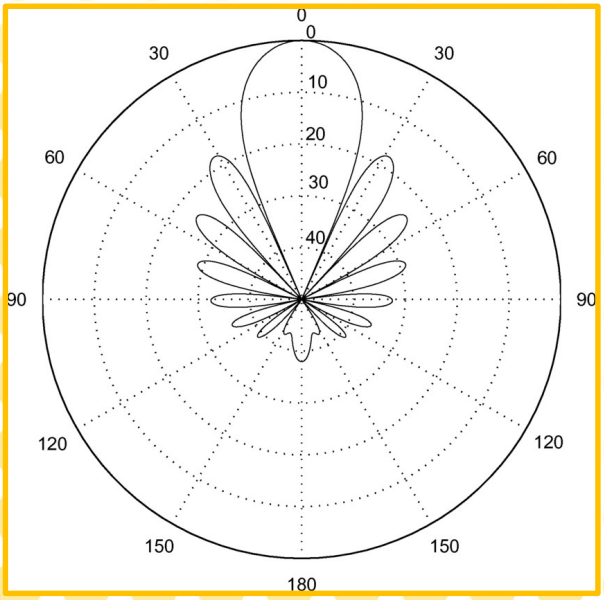

Figure : Yagi Antenna Radiation Pattern Diagram

The typical radiation pattern of a Yagi-Uda antenna looks like an elongated **lobe** pointing in the direction of the directors, with much weaker lobes in the rear and sides. The strongest signal is directly in front of the antenna.

The pattern typically has the following characteristics:

a. **Main Lobe (Forward Direction):** The strongest radiation is focused in the direction the antenna is pointing, providing high gain and increased signal strength. This focused beam enables communication over long distances.

b. **Narrow Beamwidth:** The beamwidth (angle of the main lobe) is narrow, typically between **20° and 60°**, meaning the antenna needs to be aimed precisely at the target, such as a rocket in flight.

c. **High Front-to-Back Ratio:** There is strong signal transmission in the forward direction, while radiation in the opposite direction (behind the antenna) is significantly weaker, reducing interference from signals behind it.

d. **Side Lobes:** There are small, weaker lobes to the sides of the main lobe, but these are minimal compared to the strong forward radiation.

9.4. Telemetry Display

The telemetry data is displayed in real-time on the ground station using **CustomTkinter** for a graphical user interface. The visual components of the display are powered by **Matplotlib**, providing graphical representations of sensor metrics such as altitude, velocity, and system health. Data is fetched from MongoDB, which stores the telemetry data in real time, allowing for quick access and display during flight. Firebase acts as a secondary backup to log data, but due to its reliance on high-speed internet, MongoDB is prioritized for real-time display. The interface is designed to ensure smooth visualization of telemetry data without delays, even when processing large volumes of data.

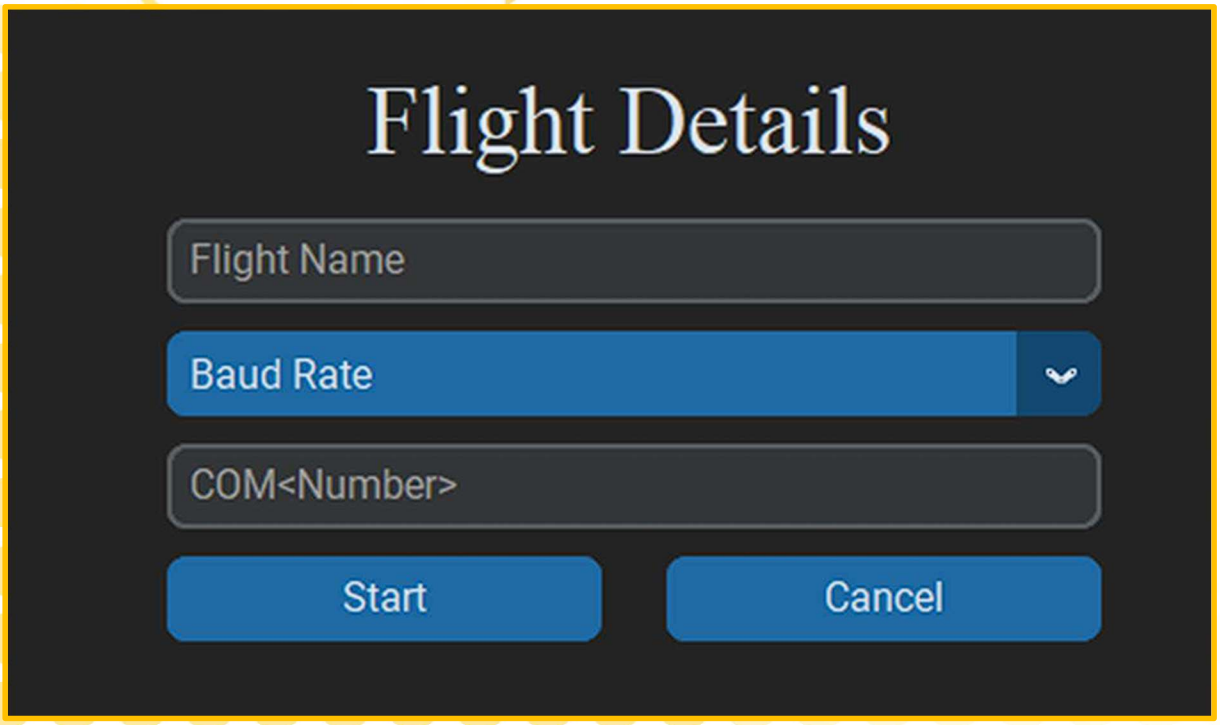

Figure : Flight Details Display

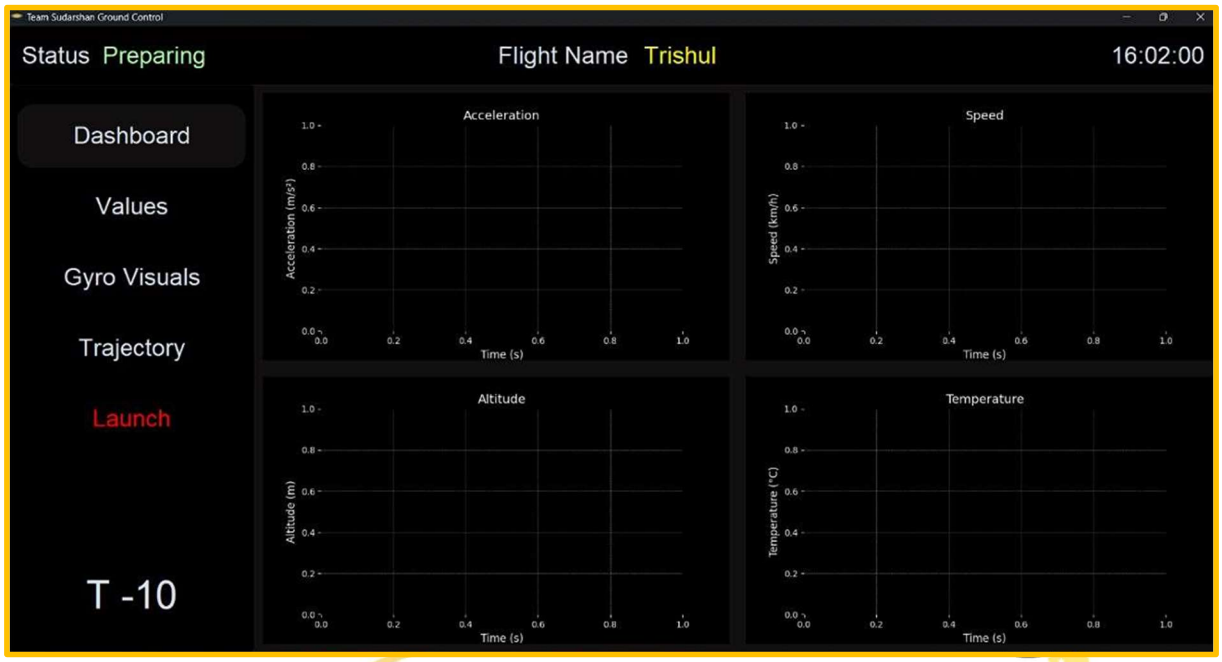

Figure : Real Time Value Display 1

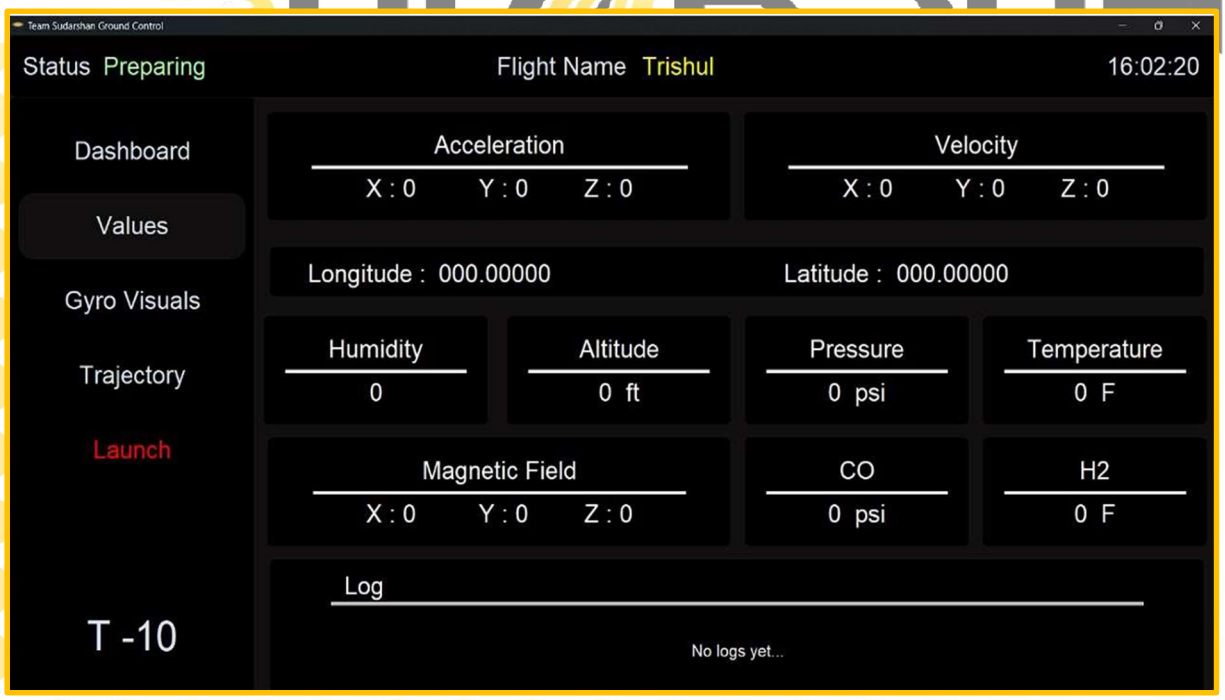

Figure : Real Time Value Display 2

9.5. Command Software and Interface

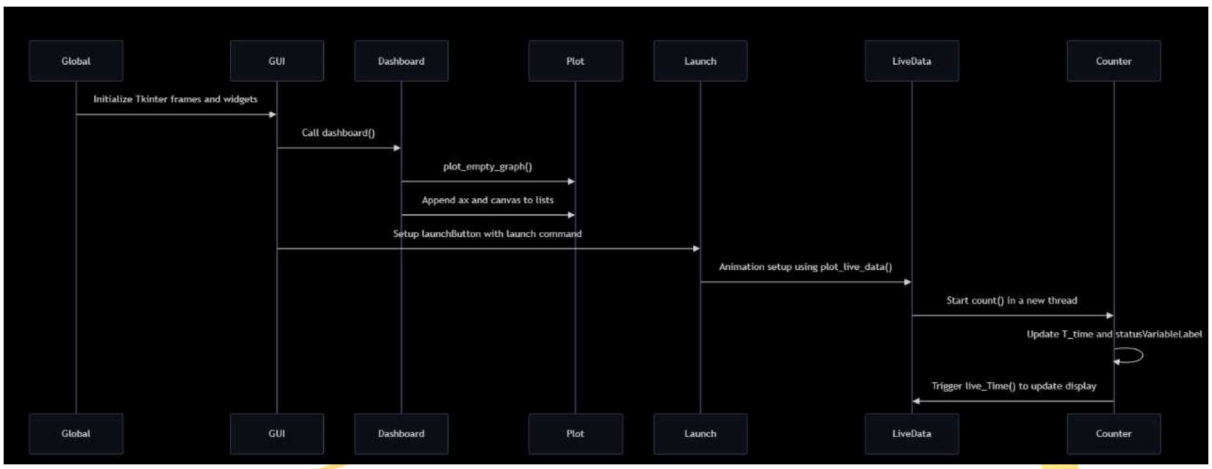

Figure : Software Component Chart

Components of the Diagram

- **Global:-**
  - Initializes Tkinter frames and widgets, setting up the graphical user
  - interface components that will be used later on.
- **GUI:-**
  - Responsible for calling the dashboard() function, which sets up the main components of the dashboard.
- **Dashboard:-**
  - Once the dashboard is called, an empty graph is plotted using the plot_empty_graph() function.
  - Axes and canvas for plotting are appended to lists, which will likely be used for dynamic graph updates.
  - The launchButton is set up with the command to launch the system, which connects the GUI to the core launch sequence.

- **Plot:-**
  - Handles the actual plotting of data.
  - plot_live_data() is used to set up the animation for real-time data visualization on the dashboard.
- **Launch:-**
  - The launch process is set up, likely involving a countdown or preparation stage before starting the actual telemetry tracking.
- **LiveData:-**
  - This section triggers the live data updates. The method live_Time() is invoked to update the display with real-time telemetry data.
- **Counter:-**
  - Manages a count() function that starts in a new thread, keeping track of time.
  - Updates T_time (likely a variable representing telemetry time) and statusVariableLabel to reflect the system's current state.

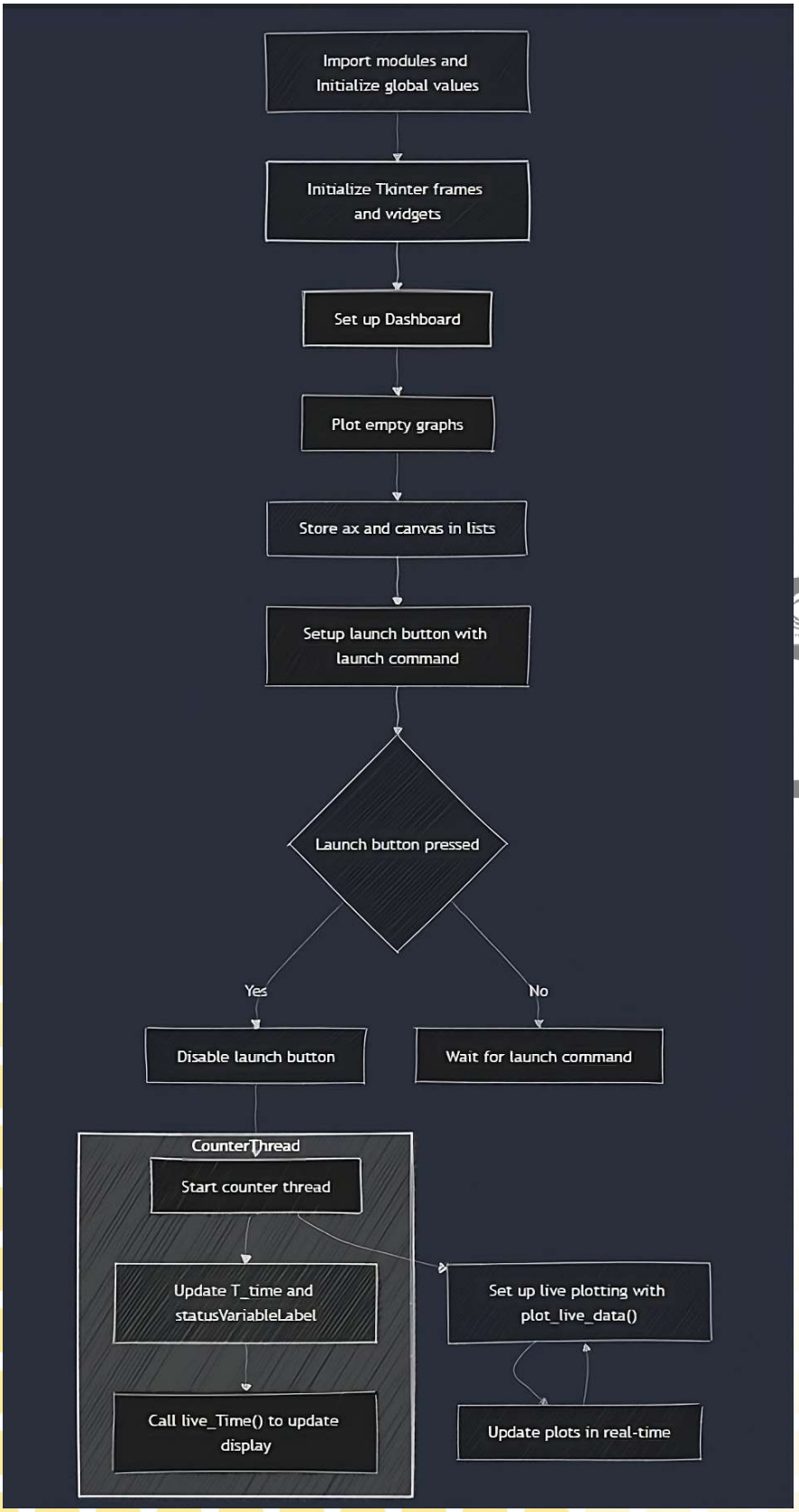

Figure : Software Flow Chart

9.6. Real-time Data Collection Scheme

The flight computer collects real-time data from onboard sensors and transmits it to the ground control station using XBee wireless modules. XBee was selected because it offers reliable, low-power, and long-range communication, making it ideal for transmitting telemetry data during a rocket flight. Unlike Wi-Fi or Bluetooth, XBee is less prone to interference and signal loss over long distances, which is crucial for continuous data transmission during the rocket's ascent. The incoming data is received as a continuous string, which is then filtered to extract relevant telemetry information such as altitude, velocity, and system health. This data filtering is handled using Python for its robust text processing capabilities and ease of integra on with other modules. The filtered data is displayed on the ground control system in real-me using CustomTkinter for the interface, as it allows for the creation of a dynamic and responsive GUI. Data packets are processed every 20 milliseconds to ensure accurate visualization of key flight metrics. MongoDB is used to log this data because of its capability to handle real-time queries efficiently without performance bottlenecks, which other databases like MySQL cannot handle as effectively when dealing with high-frequency queries. Firebase is not used for real-time telemetry display because it is cloud-based, requiring a strong and fast internet connection, which is not always feasible during flight. Instead, Firebase serves as a backup for storing data post-flight.

9.7. Last Data Command at Console Display

To prevent data loss due to communication interruptions, the system stores and displays the last successfully received command and telemetry data on the ground station console. This allows operators to assess the rocket's last known status and respond accordingly, even if real-time data transmission is temporarily lost. By retaining the last known command, the system provides operators with a reference point, ensuring continuity in decision-making.

9.8. User Interface for Real-time Data Collection

The CustomTkinter-based interface provides ground control operators with a clear, real-time display of critical flight parameters such as speed, altitude, orientation, temperature, and system health. This interface is designed to be user-friendly and responsive, ensuring that operators can easily monitor and control the flight in real-me.

The interface integrates Matplotlib for graphical representation of telemetry data, offering dynamic charts and graphs to display real-time changes in key metrics like velocity and altitude. Additionally, Folium is embedded within the interface to visualize the rocket's flight path on a map in real-time, providing spatial data to track the rocket's geographic position throughout the flight. This adds a valuable extra dimension to the monitoring process, helping operators ensure that the rocket is following the expected flight path.

Why These Technologies Were Chosen:

- **CustomTkinter** was selected because of its ability to create modern, customizable graphical user interfaces (GUIs) in Python, making it ideal for building a real-time, interactive control panel.
- Alternatives like **PyQt** or **Kivy** were considered, but CustomTkinter was chosen for its simplicity, lightweight nature, and ease of integration with other Python libraries.
- **Matplotlib** is used for visualizing telemetry data in real-time. It allows for dynamic and customizable graphing, ensuring that operators have a clear, visual representation of key flight metrics.
- **Plotly** and **Bokeh** are other potential options for real-time graphing, but Matplotlib was chosen for its simplicity, strong community support, and ease of integration with Tkinter.
- **Follium** is used for mapping and tracking the rocket's flight path in real-time. It was selected for its interactive map capabilities and Python compatibility, allowing seamless integration into the CustomTkinter interface.
- Other mapping libraries like **Google Maps API** or **Leaflet.js** could be used, but Folium offers a Python-friendly environment that is easy to customize and lightweight.
- **MongoDB** was selected for telemetry data storage because of its scalability and ability to handle high-frequency queries efficiently. It allows for real-time data insertion and retrieval without the performance issues faced by relational databases like MySQL.

- **MySQL** was not used because it struggles with handling a large number of simultaneous queries, and Firebase was not selected because it relies on cloud connectivity, which may not be reliable during flight operations.
- **Threading** was used to handle multiple tasks simultaneously, ensuring that the interface remains responsive while managing real-time telemetry data updates, user inputs, and command execution.
- **Multiprocessing** was considered but would have added complexity in communication between processes. Threading is simpler to implement and more than sufficient for the real-time requirements of the system.

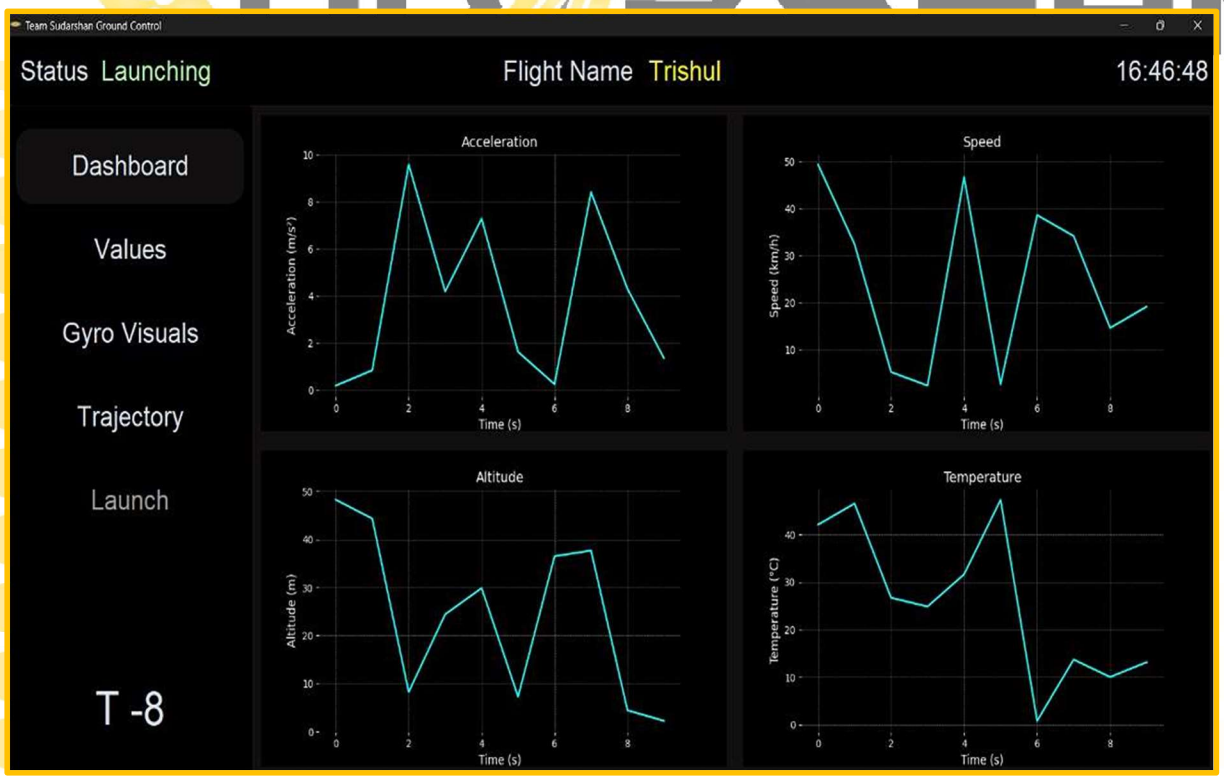

Figure : Real Time Dummy Data Graph

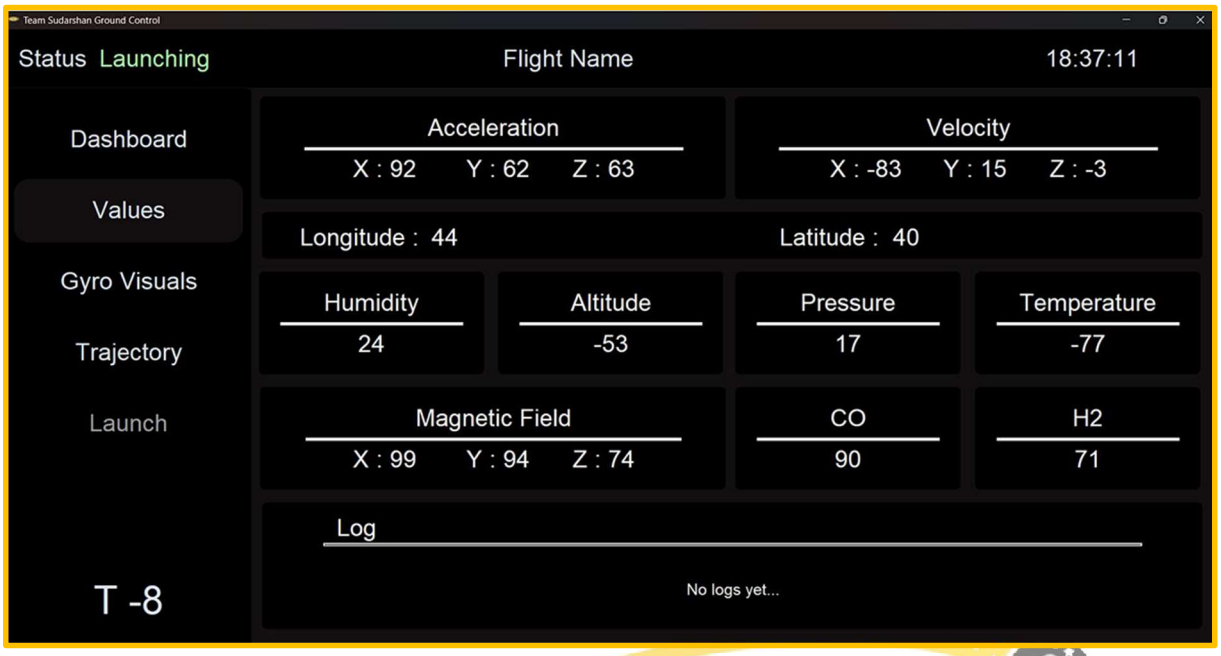

Figure: Real Time Dummy Data Values

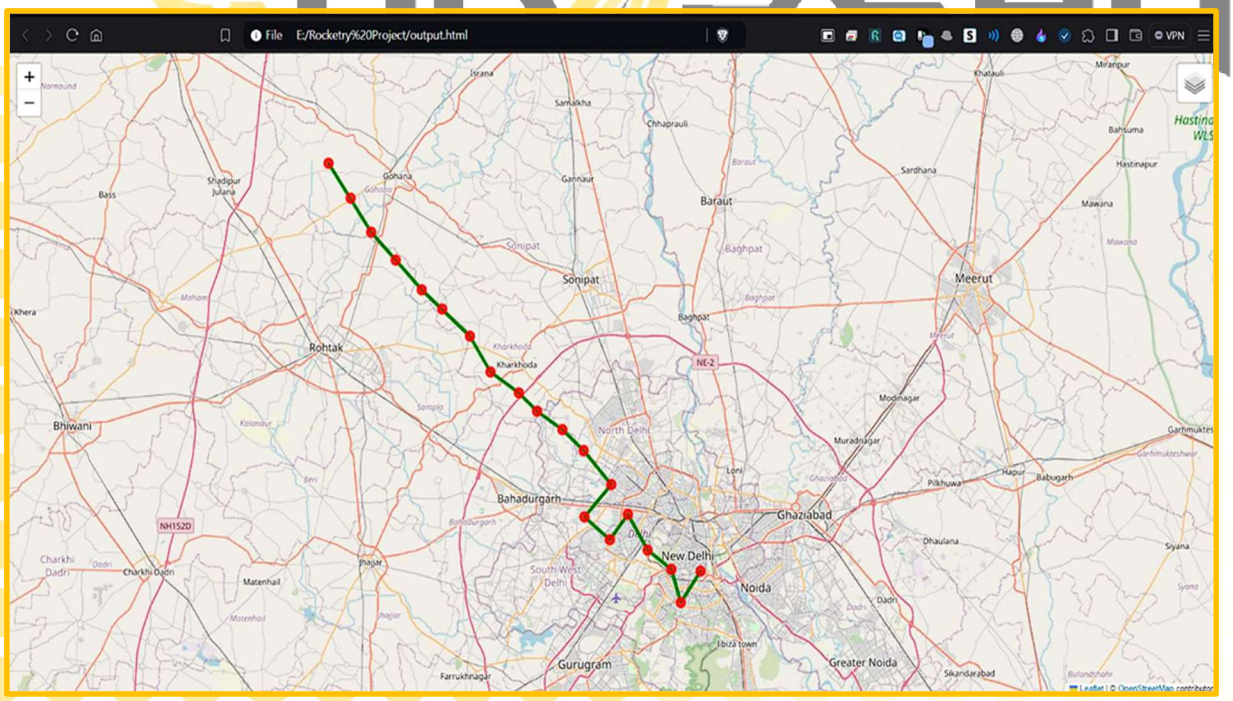

Figure: Telemetry dummy data map plot

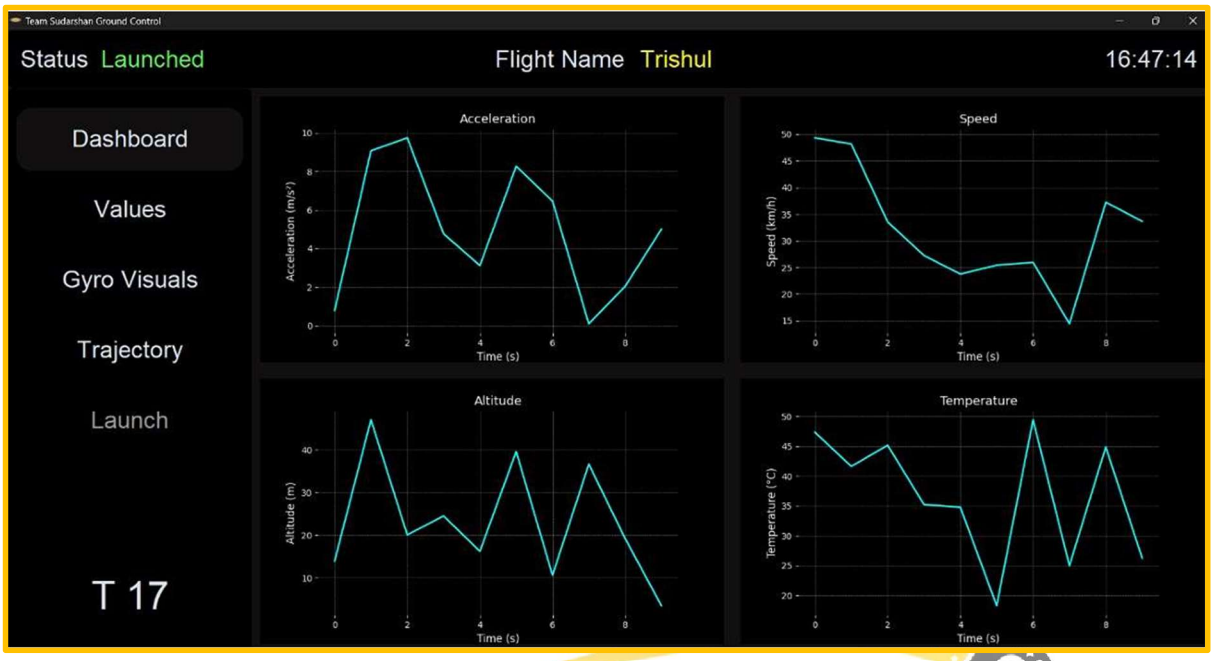

Figure : Real Time Dummy Data Graph

9.9. Ground System Transmission and Uploading of Data

The ground control system receives real-me telemetry data via XBee wireless modules. XBee was chosen for its long-range, reliable communication over other alternatives like Wi-Fi or Bluetooth, which are more prone to interference, shorter ranges, and limited bandwidth, making them unsuitable for transmitting rocket telemetry over long distances. The data is stored locally in MongoDB during the flight, which was chosen for its ability to handle real-time queries and large amounts of telemetry data without performance issues. MongoDB allows for high-speed data insertion and retrieval, making it ideal for managing continuous telemetry streams during flight. MySQL was not

used because it struggles with handling a high number of concurrent queries, leading to potential performance bottlenecks. Firebase was also not chosen because it is cloud-based and requires a fast, stable internet connection, which may not be available during the flight, especially in remote locations. Firebase would introduce latency in real-time operations, making it less reliable for immediate data storage and access. To prevent data loss during brief communication interruptions, telemetry data is logged locally in CSV format, ensuring that there is a fail-safe backup available on the ground station. This allows the ground control team to access and analyse telemetry data even if the primary data transmission is interrupted temporarily.

9.10. Sensor and Payload Telemetry

The flight software is integrated with an onboard sensor suite, providing data such as acceleration, temperature, pressure, and orientation. If the rocket is carrying experimental payloads, their data is transmitted alongside the rocket's core telemetry. The software manages multiple telemetry streams, ensuring that payload data is synchronized with the core flight data, allowing scientists and engineers to monitor the experiment's performance during the mission.

9.11. Libraries Used

- **Tkinter**: For creating graphical user interfaces (GUIs) in the ground control station interface, enabling real-time display of flight data and commands.
- **OS Module**: Used to interact with the operating system, primarily for managing file paths when saving or retrieving data logs. • Subprocess Module: Allows the software to run external processes, such as executing supplementary Python scripts that handle data processing or simulation tasks.
- **Web browser Module**: Used to open URLs or local files in the default web browser, such as opening HTML files that contain map or telemetry information for analysis.
- **Folium**: A Python library for creating interactive maps, used to visualize the rocket's real-time location and flight path.
- **Threading**: To maintain multiple processes at one time, ensuring real-time data updates from sensors and smooth performance.
- **MongoDB**: For fast and efficient storage of telemetry data, chosen due to its ability to handle large numbers of queries simultaneously and provide high-performance real-time insertion and retrieval.
- **CSV**: For local data storage and logging, ensuring raw telemetry data is safely stored during flight.

10. Vehicle Preliminary Testing Plan

A Vehicle Preliminary Testing Plan for model rocketry typically ensures the vehicle (rocket) is tested for its mechanical and functional reliability before its actual flight

10.1. Mechanical Tests

Mechanical tests are designed to verify the rocket's overall durability, structural integrity, and operational capability under expected conditions.

10.1.1. Functional Development Tests

10.1.4. Vibration Tests

Vibration tests simulate the intense vibrations a rocket experiences during launch and flight. A **vibration motor** can be used for vibration testing of a model rocket to simulate the conditions the rocket will experience during launch, such as the mechanical vibrations caused by engine thrust, aerodynamic forces, and any structural resonances. The goal of using a vibration motor in this context is to:

- Simulate the vibrations the rocket will encounter during various phases of its flight, especially during launch and ascent.
- Ensure the rocket's structure, electronics, payload, and components (such as the engine, motor mount, and recovery system) remain intact and operational despite the forces.

Test Procedure:

- **Frequency Sweep**: Run the vibration motor through a range of frequencies, starting from low to high. This will help identify any structural weaknesses or resonance points in the rocket.
- **Sustained Vibration**: Keep the motor running at a certain frequency for an extended period to simulate the prolonged vibrations during the actual flight. This helps assess whether the rocket can handle extended exposure to vibration.
- **Component Testing**: Focus the test on sensitive areas, such as the payload bay, recovery system housing, and electronics, which may be prone to damage or malfunction due to vibrations.

The **12V-40V 10A DC Motor PWM Speed Control Switch Governor** is an excellent tool for controlling the speed of a vibration motor and thus adjusting the intensity of vibrations for testing purposes. This can be particularly useful in vibration testing for model rocketry, especially when testing sensitive components like avionics systems.

To use the **12V-40V 10A DC Motor PWM Speed Control Switch Governor** for

vibration testing of model rocket avionics:

Figure : Vibration motor for vibration testing & 12V-40V10A DC Motor PWM Speed Control SwitchGovernor

1. Connecting the Vibration Motor to the PWM speed controller and a DC power supply (12V-40V).
2. Adjusting the Motor Speed using the PWM knob to control the intensity of vibrations.
3. Simulating different vibration environments by varying motor speeds:
   - Low Speeds for gentle vibrations (pre-launch conditions).
   - Medium Speeds for typical flight vibrations.
   - High Speeds for intense vibrations (during maximum thrust).
4. Monitor the Avionics to ensure they operate correctly under different vibration intensities.

10.1.5. Thermal Tests

Thermal tests evaluate the rocket's ability to operate under the extreme temperature conditions it may face during flight and launch. It ensures that materials can handle thermal expansion or contraction without failure and verifies that electronics and other temperature-sensitive components remain operational under thermal stress.

A **Laboratory Muffle Furnace** is an essential tool for simulating extreme temperatures that components of a model rocket might experience during high-velocity ascent. By using the furnace, you can test a variety of rocket parts to ensure they can withstand the high heat caused by air drag and other flight conditions.

Figure : Laboratory Muffle Furnace

With the help of muffle furnace, we can **test various components** of the rocket on certain temperatures.

- **Avionics and Electronics:**

  Test the thermal tolerance of onboard electronics and sensors to ensure they can operate without failure at high temperatures.

- **Nose Cone:**

  The nose cone experiences the highest heat during flight. Testing its material in the furnace verifies its ability to withstand extreme aerothermal heating without deforming.

- **Epoxy Quality:**

Assess the temperature resistance of the epoxy used to bond parts of the rocket. Exposure to high temperatures will test its strength and reliability during flight.

- **Body Tube Sample Test:**

  Heat samples of the body tube material to ensure that the rocket's structure remains intact at elevated temperatures.

- **Fin Sample Test:**

  Test fin materials to verify they won't degrade or melt under the high heat generated by air drag and high-speed flight.

10.1.6. Vacuum test

The vacuum test simulates the low-pressure environment at high altitudes, allowing you to confirm that your avionics systems will perform as expected during the rocket's flight through the upper atmosphere.

A Mini Vacuum Pump can be used for low-pressure testing of model rocket avionics, simulating the conditions found at high altitudes. By reducing the pressure to as low as 5 mmHg, you can ensure that your avionics will continue to operate reliably under the low-pressure environment encountered during flight.

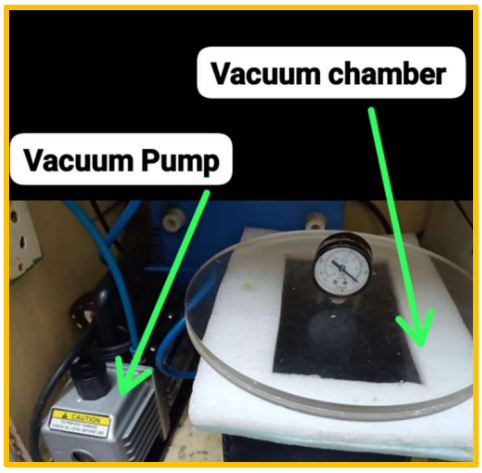

Figure: For Vacuum Test

Steps for Low-Pressure Testing of Avionics Using a Mini Vacuum Pump:

- **Set up the Test Chamber:** Placing the avionics system in a sealed test chamber that is connected to the mini vacuum pump.
- **Connect the Vacuum Pump**: Attaching the mini vacuum pump to the chamber and begin reducing the pressure. Then gradually lowering the pressure to the desired level (up to 5 mmHg) to simulate conditions at high altitudes.
- **Monitor Avionics Performance**: While the pressure is reduced, checking that the avionics (sensors, electronics, and communication systems) are functioning correctly and reliably. And then measuring the impact of low pressure on the performance and integrity of the avionics.
- **Test Different Pressure Levels**: Simulating various altitude conditions by adjusting the pressure in the chamber. This helps ensure the avionics will function properly throughout the rocket's ascent.

10.1.7. Fit Checks

Fit check will be performed to a test to ensure that all components of the rocket physically fit together as intended. This includes verifying the alignment, assembly, and integration of parts like the nose cone, body tube, fins, motor mount, payload, and recovery system.

(PDR Stage)

Every component will be assembled in 3D designing software like SolidWorks to check whether everything fits properly

Fig.: Every component is assembled in 3D software to ensure proper fitting

(Post PDR)

After PDR, all the components will be individually measured and compared with the software designs to ensure perfect manufacturing. After individual testing, dry assembly will be done in which the respective components will be inter connected before final assembly.

10.1.8. Parachute Deployment Test

Parachute deployment test is one of the most crucial tests before actual launch. This test will be performed in the following steps –

- Altimeter - Altimeter test by repeated launch of altimeter in a drone to confirm correct working of the altimeter.

- Pyro charges – Pyro charges ignition pressure will be measured through pressure chamber and pressure gauge to ensure sufficient pressure will be generated to pop-open the nose cone.
- Fitting – Nose cone and lower body tube will friction fitted or if necessary, shear bolts will be screwed.
- Deployment test – The rocket will be dropped from highest altitude possible in our region to test proper functioning.

10.1.9. Acceptance Test

1. **Structural Integrity Tests**
   - Body Tube Strength Test
   - Fin Attachment Strength
   - Nose Cone Attachment
   - Motor Mount Strength
2. **Recovery System Tests**
   - Parachute Deployment Test
   - Shock Cord Strength Test
   - Parachute Packing Test
3. **Engine and Thrust Tests**
   - Motor Ignition Test
   - Motor Retention Test
   - Thrust Performance Validation
4. **Electronics and Avionics Tests**
   - Altimeter and Sensor Testing
   - Ejection Charge Test

- Arduino or Flight Computer Testing
- Telemetry and Data Logging Test

5. **Aerodynamic Testing**
    - Wind Tunnel Testing (if available
    - Center of Gravity (CG) and Center of Pressure (CP) Check
6. **Environmental Tests**
    - Temperature Testing
    - Vibration/Shock Testing
    - Humidity Testing
7. **Final Assembly Test**
    - Fully Assembled Functional Test
    - Flight Simulation
8. **Ground Launch System Test**
    - Ignition System Test
    - Launch Rail System

Model Rocketry Budget

Airframe assembly			
Components	**Quantity**	**Unit Cost**	**Total Cost**
Nose Cone 3D Printed	1	6000	
Fins (Fibreglass reinforced MDF sheet- 5mm)	4		
Resin-reinforced cardboard body tube	1		
Center Rings (MDF -20mm)	2		
Thrust Plate (Aluminium)	1		
Rail Buttons (Aluminium)	2		
Conical Transition (PP Co-polymer)	1		
Total Cost of Airframe Assembly			

Avionics Assembly			
Components	**Quantity**	**Unit Cost**	**Total Cost**
Arduino Nano BLE Sense 33 Rev2	1	3000	3000
NavIC GPS	1	3500	3500
SIM800L	1	200	200
MAX6675 Thermocouple	1	150	150
Arduino Nano (Ordinary)	1	2000	2000
BMP280	1	25	25
SD Card Module	1	40	40
Battery	1	200	400
LED	2	10	20
INA219 Current Sensor	1	500	500
FPV Camera	1	8000	8000
RTC	1	120	120

Total Cost of Avionics Assembly	

Recovery System Assembly			
Components	**Quantity**	**Unit Price**	**Total Price**
Parachute	1	6000	6000
Drogue Chute	1	600	600
Shock Cords	1	600	600
Altimeter	1	500	500
Glass Wool	1	500	500
Pyro Charges	8	200	1600
Tracking Buttons	2	150	300
Total Cost of Airframe Assembly			
Communication Assembly			
Components	Quantity	Unit Price	Total Price
XBee Pro S3B	2	4500	9000
LoRa	2	350	700
Yagi Uda Antenna	1	1000	1000
Total Cost of Communication Assembly			
Ground Support Equipment Assembly			
Components	**Quantity**	**Unit Price**	**Total Price**
Launch Rail/Pad	1	10000	10000
Ignition System	1	2000	2000
Telemetry Base System	-	-	-
Total Cost of Ground Support Equipment Assembly			
Payload Assembly			
Components	**Quantity**	**Total Price**	**Total Price**
Arduino Nano BLE Sense 33 Rev2	1	3100	
NavIC GPS	1	2500	
XBee Pro S3B	2	4500	
SD Card Module	1	200	
RunCam Thumb	1	4500	
LED	1	10	
INA219 Current Sensor	1		
MQ2 Sensor	1		

Buzzer	2		
Buck Converter	2		
MG90S Servo	3		
RTC	1		
Body	1		
Parachute (NOMEX cloth)	6		
Ropes (Nylon Shock Cord)	1		
Total Cost of Payload Assembly			
Other Requirements			
Components	**Quantity**	**Unit Cost**	**Total Cost**
M5 Screw	15	5	80
M12 Screw	15	23	345
RockSim Software	1	4000	4000
Total Cost of Airframe Assembly			

Rocket Avionics Power Budget			
Component	**Peak Current (mA)**	**Power Consumption (mW)**	**Total Power for 40 mins (mWh)**
Arduino Nano BLE Sense 33 Rev2	50	100	66.67
NavIC GPS	50	80	53.33
SIM800L	200	300	200
XBee Pro S3C	50	100	66.67
Pyro Charges	500 (trigger only)	1000(1-time use)	0.00 (considered separately)
MAX6675 Thermocouple	5	10	6.67
Arduino Nano (Ordinary)	50	100	66.67

BMP280	5	10	6.67
SD Card Module	50	100	66.67
LED	20	20	13.33
INA219 Current Sensor	10	20	13.33

Rocket Payload (CANSAT)Avionics Power Budget			
Component	**Peak Current (mA)**	**Power Consumption (mW)**	**Total Power for 40 mins (mWh)**
Arduino Nano BLE Sense 33 Rev2	50	100	66.67
NavIC GPS	50	80	53.33
SD Card Module	50	100	66.67
FPV Camera			
LED	20	20	13.33
INA219 Current Sensor	10	20	13.33
MQ2 Sensor	20	20	13.33
Buzzer	30	30	20
Buck Converter	15	30	20

CONCLUSIONS

Division	Major Accomplishments	Major Unfinished work	Testing to complete
Hardware		**Battery Position**	
Mechanical			
Software			
Administration			
Brand Team			