Hardware Lab

555 Timer [Astable Multivibrator]

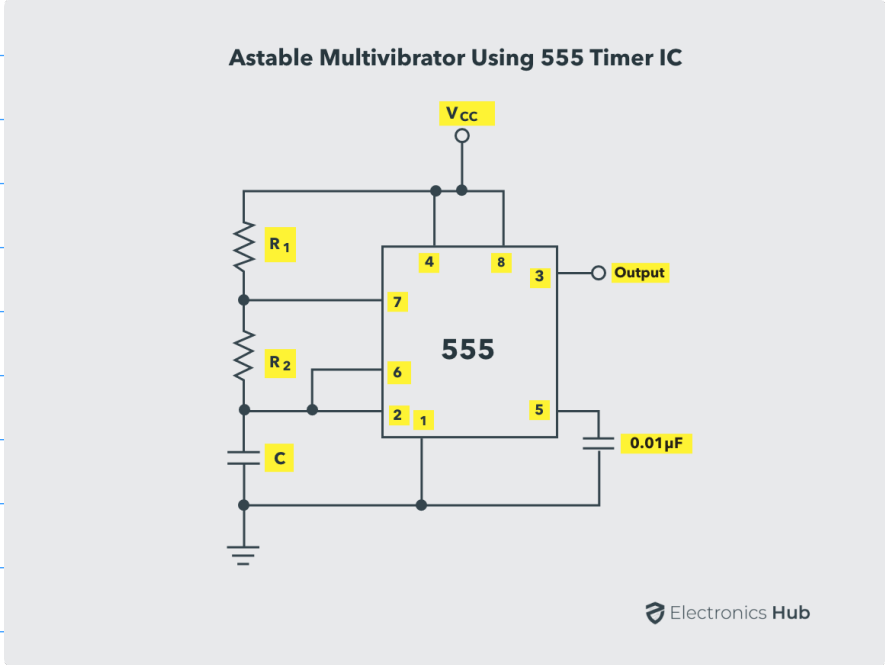

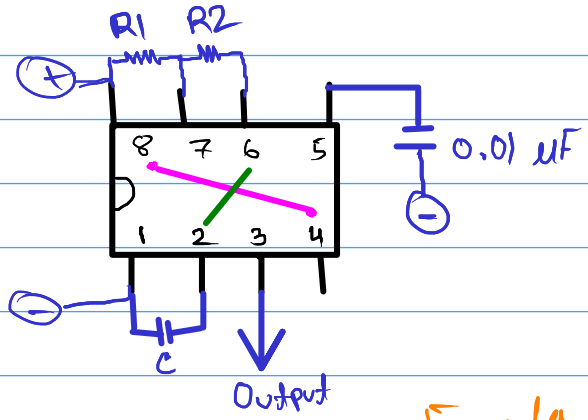

Formula

$$f = \frac{1.44}{(R_1 + 2R_2) \times C} \text{ Hz}$$

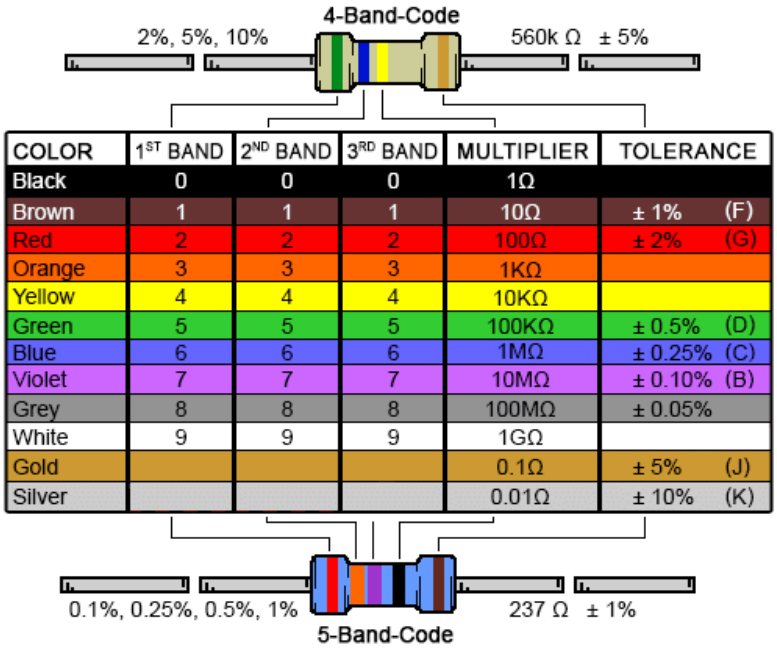

COLOR	1ST BAND	2ND BAND	3RD BAND	MULTIPLIER	TOLERANCE
Black	0	0	0	1Ω	
Brown	1	1	1	10Ω	± 1% (F)
Red	2	2	2	100Ω	± 2% (G)
Orange	3	3	3	1KΩ	
Yellow	4	4	4	10KΩ	
Green	5	5	5	100KΩ	± 0.5% (D)
Blue	6	6	6	1MΩ	± 0.25% (C)
Violet	7	7	7	10MΩ	± 0.10% (B)
Grey	8	8	8	100MΩ	± 0.05%
White	9	9	9	1GΩ	
Gold				0.1Ω	± 5% (J)
Silver				0.01Ω	± 10% (K)

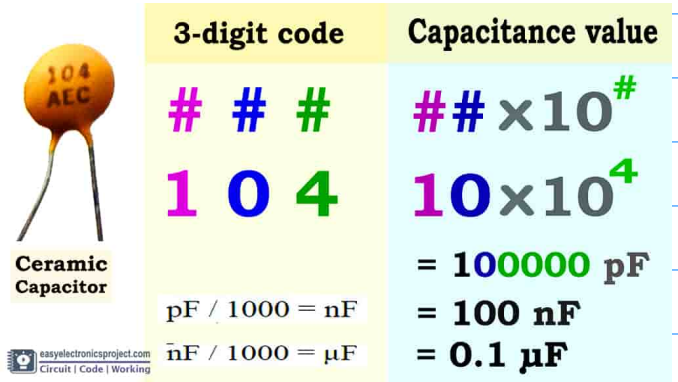

Counter System

7400 Quad 2-input NAND Gates

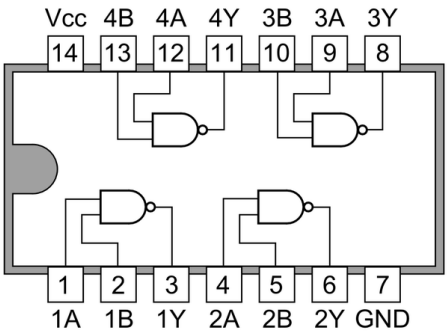

74HC73 - JK Flip Flop

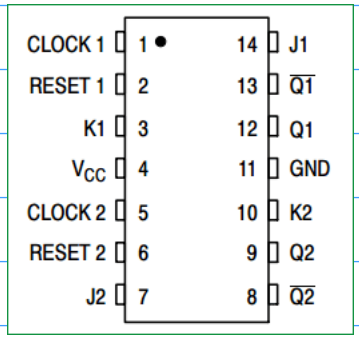

74LS192 -- Decade Counter

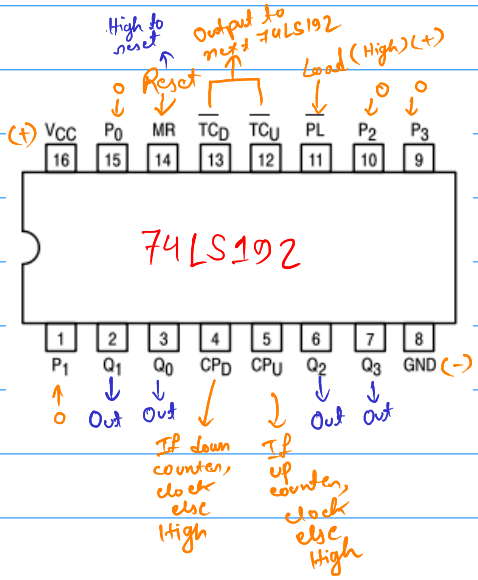

7447 - BCD to 7 segment decoder

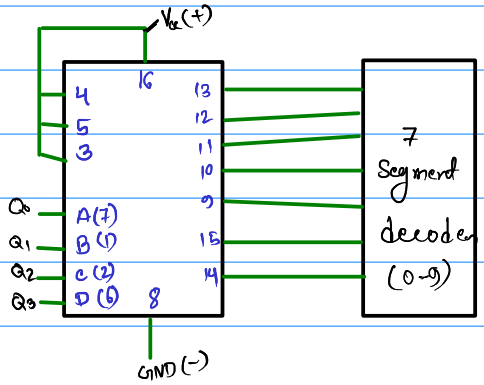

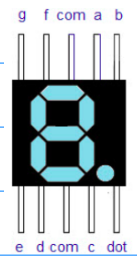

Counter with FF (JK)

Up Counter [Q' → Next clk]

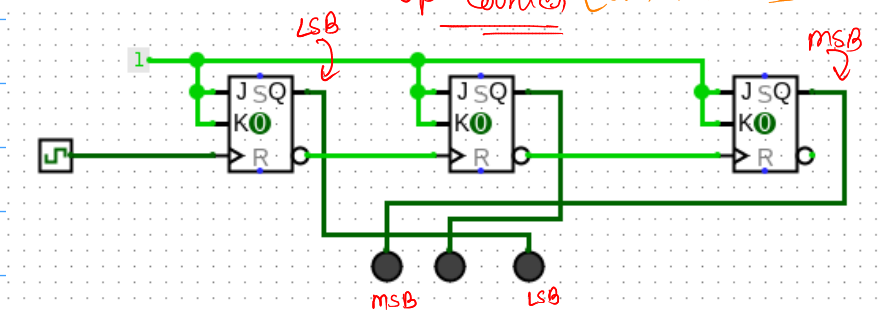

Down Counter [Q → Next clk]

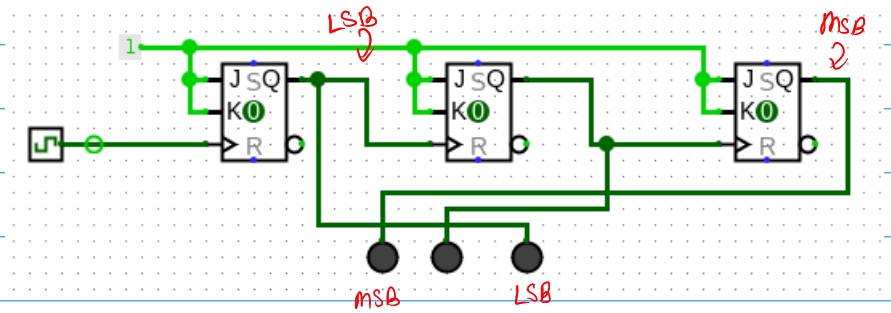

Reset / Clear Counter

JK FF ⇒ Active Low ⇒ Put 0 (zero) to RESET to clear

74192 ⇒ Active High ⇒ Put 1 (one) to RESET to clear

Circuit Diagram :-

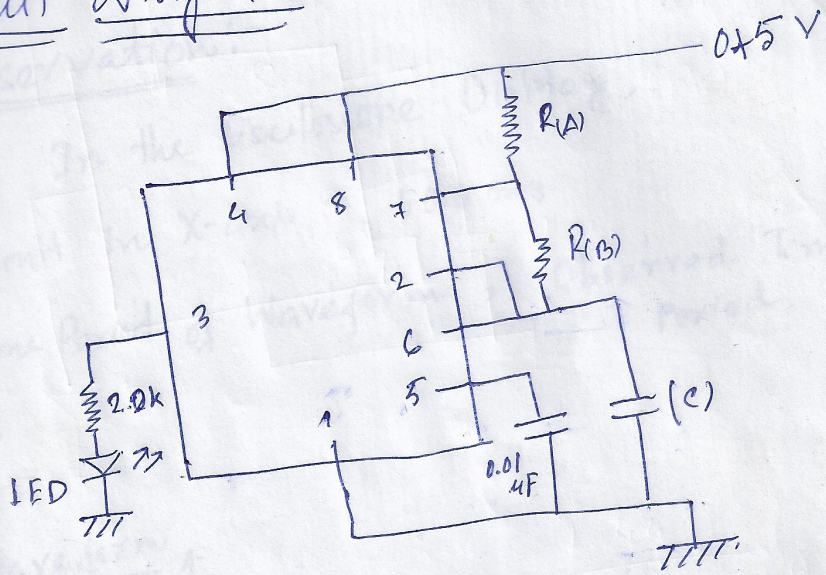

In the Diagram:-

$R_A \simeq 470\,k\Omega$

$R_B \simeq 1\,M\Omega$

$C \simeq 0.1\,\mu F$

Formula:- Frequency $f = \dfrac{1.44}{(R_A + 2R_B) \cdot C}$

Calculation:-

$$f = \frac{1.44}{(470\times10^3 + 2\times10^6)\times10^{-7}} = \frac{1440\times10^{-3}}{2470\times10^{4}\times10^{-7}}$$

$$= \frac{1440}{247} = 5.9\,Hz$$

Mita Nanpara
16-02-2022

~~Obt~~

Observation:-

In the Osciloscope Display,

1 unit in X-axis = 50.0 ms

Time Period of Waveform = Observed Time Period $\times \frac{50}{5}$ ms

Waveform

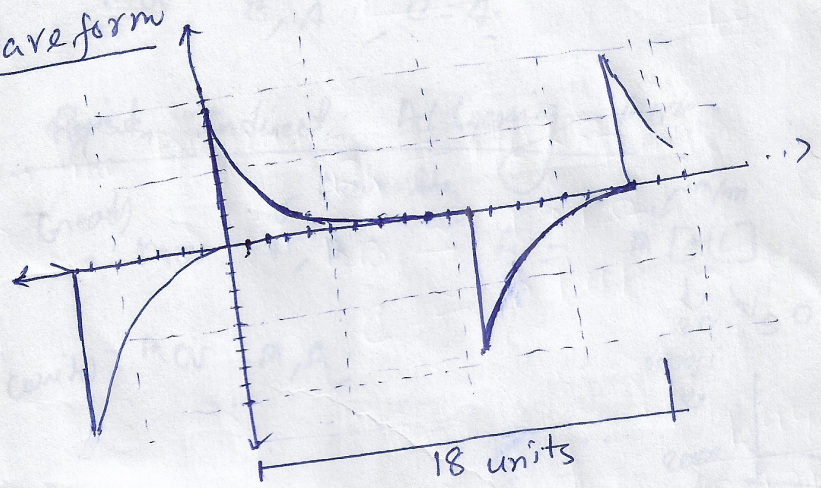

Mita Nandini
16.02.2022

$\therefore$ Time Period $= 18 \times \frac{50}{5}$ ms

$= \frac{900}{5}$ ms. $= 180$ ms

$\therefore$ frequency $f = \frac{1}{T} = \frac{1}{\cancel{900}\ 180} \times 1000$ Hz

$\simeq 5.56$ Hz

Circuit diagram

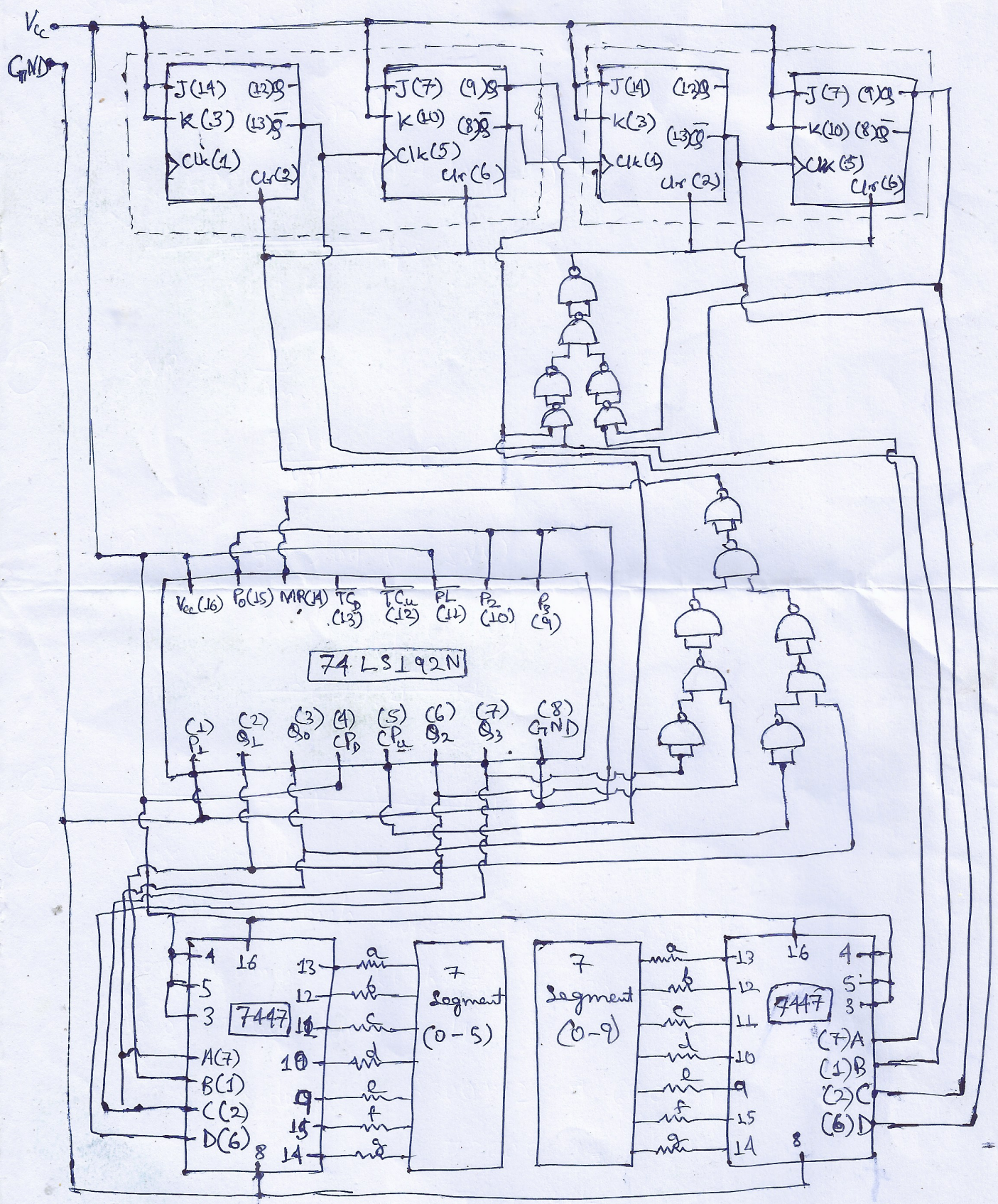

13/4/2022