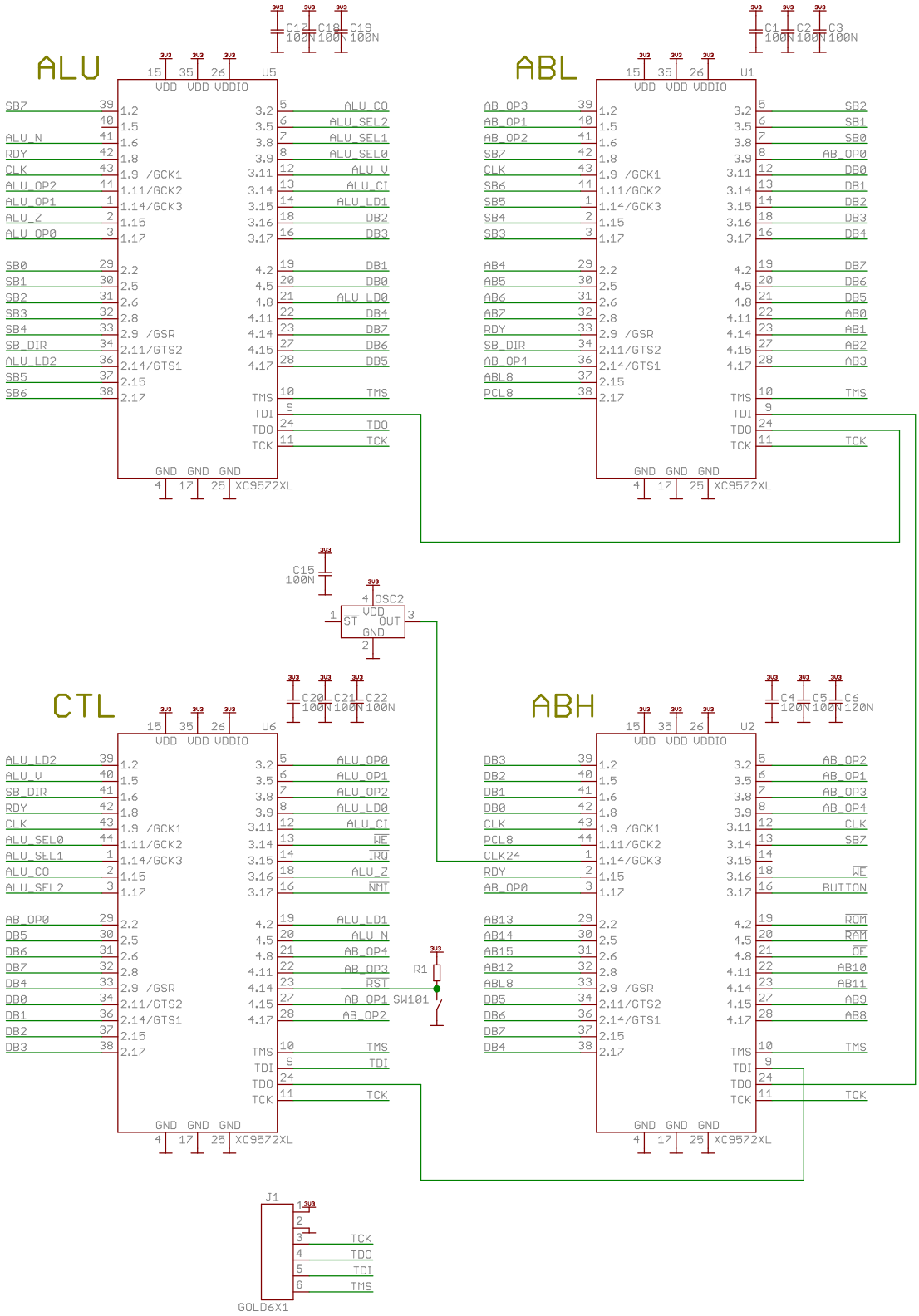

XXXX

Project: CPLD-6502			
Date: 20181231	Rev:	Last: 12/31/2018 9:00:55 PM	
Name: cpld		Drawn: AO	Sheet: 1/4