	S.A.G.A EURL C/O Gaston ULRIC 15 Lotissement Les Vallons Route de Balata 97234 FORT DE FRANCE SIRET 482 569 613 00011	**BON DE LANCEMENT ET EXÉCUTION N° 13-2018** Rev1 IMMATRICULATION : **F-GATD** DATE 16/09/2018 (mise à jour des heures)

ORGANISME D'ENTRETIEN

Nom : ATIS N° d'agrément : FR.145.566
Dirigeant responsable : GUINOT Françoise

SITUATION DE L'APPAREIL AU COURS DES TRAVAUX

	MARQUE	TYPE	N° DE SÉRIE	HT	H depuis Rév.	Pot. Restant
Cellule	PIPER	PA 28-181	28 78 90138	9731,3		
Moteur	LYCOMING	O360 A4M	L-30677-36AC	4337,0	1012,8	
Hélice	SENSENICH	76EM8S5-0-62	100294K	2837,8	855,1	

Heures depuis dernière visite : 47.4
Heures jusqu'à prochaine visite : 2.6

Nature des travaux	VISA	
	Lancement	Exécution
1. VP 50 heures		
2. Vérification fonctionnement allumage moteur (bougies, magnétos ...)		
3. ATA74-B21 : Inspection des 500 heures magnétos suivent CMM Slick L-1363		
4. Appliquer CN 2017-14-04		
5. ATA27-1 : chaine du volant de commande		
6. ATA 27-2 : chaine de rentrée et de sortie des volets		
7. ATA52 : Mécanisme de verrouillage		
8. ATA 57 : Orifices de ventilation		
9. ATA 79-B9 : Radiateur d'huile : déposer et rincer		
10. Remplacement filtre régulateur de dépression B3-5-1		
11. Remplacement mécanisme compensateur de profondeur		
12. Remplacement des échappements		
13. Remplacement joint de la porte cabine + ajustement de la porte		
14. Remplacement antidérapant manquant bord d'attaque aile droite		
15. Remplacement boa d réchauffage cabine		
16. Remplacement cover assembly engine control		
17. Remplacement du support de la boussole		

TRAVAUX SUPPLÉMENTAIRES	VISA	

Programme d'entretien

Les travaux doivent être réalisés en accord avec le Programme d'Entretien
S.A.G.A :
Edition n° 2, Révision : 00, Avril 2013.
Approbation : OSAC – DOOM

Demandeur : ULRIC Gaston

Avion : PA28-181 Immat. :F-GATD DT n° 18-077

Outillages / Instruments

Désignation	Marque	P/N	S/N	Date de fin de validité
Poignée de gonflage	Wika	III AIR	140084766	novembre-18
Clef dynamomètrique	CDI Torque Products	2502MRMH-1/2	312606417	novembre-18
Clef dynamométrique (20-100 ft-lb.)	Précision Instruments	M2R100F	1529	novembre-18
Tensiomètre de câbles	Kent Moore	BT-33-75D	71322	novembre-18

Matériels

P/N	Description	Qté
DIVERS	HUILE GRAISSE HYDRAULIQUE	AS REQUIRED
CH48110-1	oil filter	1
D100	oil	8L
B3-5-1	filter	1
554-859	clamp	2
63633-038	Hose	1
65246-000	shaft	1
63530-00	Barrel	1
452-418	bearing thrust	1
494-097	shim	1
484-747	snap ring	1
452-413	Bearing oilite	2
MS24665-368	cotter pin	2
H-67232-40-41	cover assy engine control	1
H65846-00	Plate	1
H79600-00	compass housing	1

boa réchauffage

Compensateur de profondeur

+ P1M0007 Muffler Qty 2.

Données d'Entretien

Réf.	Description	Révision	Date	Conformité
761-679	Maintenance Manual - PA-28-181 Archer II	CR940731	juil-94	
60297-12	Operator's Manual - O-360	8eme edition	déc-09	
SPRM 590	metal propeller repair manual			
L-1363	4300 6300 magneto maint.&ovh. manual	G	31/09/17	
Divers	collection SB,ST,SL cellule/moteur/hélice			

Disponibilité installations et personnel

Disponibilité hangar	N° Emplacement / Ligne	Dispo hangar	Durée prévue
OUI	1	3j	3j
Disponibilité technicien	Nombre	Dispo personnel	Durée prévue
OUI	3	72 HH	64 HH
Disponibilité équipements (1 compresseur; 4 escabots; 1 plateforme (profondeur); 2 visseuses; 3 caisses mécanicien; 1 cylinder wrench set; 4 établis; 3 étagères roulantes)			OUI

Rappel: les techniciens sont responsable d'éxecuter les tâches critiques durant les périodes où ils sont les plus alertes !!

ATIS PLA Ed3 Amdt0

Dossier de Travaux N°

18-077

Propriétaire / Exploitant :

S.A.G.A Eurl

Aéronef / Equipement :

Type / P/N	S/N	Immat.
PA28-181	28-7890138	F-GATD

Documents fournis par le client :

- ☑ Bon de commande
- ☑ Programme d'Entretien
- ☑ Grilles d'émargement
- ☑ CN/AD/SB
- ☐ Autre :

.....

.....

Date :

19 septembre 2018

Zone Aviation Générale - Aéroport Martinique A. Césaire - 97232 LE LAMENTIN
Tél : 0596 52 49 05 - Fax : 0596 38 14 75 - Email : meca@atisfwi.com

DT N° 18-077

Liste des pages

Référence	Nom du document	Nbre pages
ATIS DT 0	Page de garde	1
ATIS DT 1	Liste des pages	1
ATIS DT 2	Bon de lancement des travaux	2
ATIS DT 3	Liste des pièces remplacées	2
ATIS DT 4	Travaux commandés / découverts	3
ATIS DT 5	Travaux reportés ou à suivre	1
ATIS DT 6	Récapitulatif Dossier de Travaux	1
CRS	Certificat de Remise en Service	1
OE	Ordre d'Exécution	0
ATIS RECAP	Récapitulatif des taches effectuées	0

DT N° 18-077 **Bon de Lancement de Travaux**

Equipements à potentiel

ED : ATA 74-B21 Magnétos suivant CMM Slick L-1363 §3.3
LB : ATA 27-1 Chaîne du volant de commande suivant AMM chap. 12-20-00
LB : ATA 27-2 Chaînes de rentrée/sortie des volets suivant AMM chap. 12-20-00
LB : ATA 52-1 Mécanismes de verrouillage des portes suivant AMM chap. 12-20-00
LB : ATA 57-1 Axes orifices de ventilation des ailes suivant AMM chap. 12-20-00
VE : ATA 79-B9 Radiateur d'huile suivant AMM chap. 79-20-00
SC : ATA 37-3 Filtre régulateur dépression suivant AMM chap. 37-10-00

Travaux supplémentaires

Vérification allumage moteur (bougie, magnéto...)
Remplacement mécanisme de profondeur
Remplacement des échapements
Remplacement joint de porte + réglage
Reprise de l'antidérappant
Replacement boa réchauffage cabine
Remplacement cover assy engine control
Remplacement support de boussole

Le Responsable Entretien
M. Dadou Nicolas

DT N° 18-077 **Bon de Lancement de Travaux**

Programme d'Entretien

Edition :	2	Révision :	0	Date :	avril-13
Réf. approbation :	OSAC-DOOM-13-0130				

Aéronef / Equipement

Type / P/N : PA28-181	S/N :	28-7890138	Immat. :	F-GATD
Heures totales :		9731.3		h:mn
Heures depuis ❑GV / ❑ RG :		N/A		h:mn
GMP 1 : ❑Heures totales / ❑ Heures depuis RG		4337.0	1012.8	h:mn
GMP 2 : ❑Heures totales / ❑ Heures depuis RG		N/A	N/A	h:mn
Hélice 1 : ❑Heures totales / ❑ Heures depuis RG		2837.8	855.1	h:mn
Hélice 2 : ❑Heures totales / ❑ Heures depuis RG		N/A	N/A	h:mn
Atterrissages :		N/A		ATT

Travaux Programmés

50H

Application CN/AD/SB

US-2017-14-04

DT N° 18-077 | **Travaux Commandés** | 50H | F-GATD

Application CN/AD/SB | **19/09/18**

N° OPS	Tâches à effectuer	CRIT	Exec.	Cont.
1	US-2017-14-04		NCE	RFC
2				
3				
4				
5				
6				
7				
8				
9				
10				
11				
12				
13				
14				
15				
16				
17				
18				
19				
20				
21				
22				
23				
24				
25				

Observations : *(noter le n° de l'item correspondant)*

1 AD 2017-14-04 vérifié RAS

Rappel : = autocontrôle
= contrôle croisé
= contrôle par personnel habilité

DT N° 18-077 **Travaux Commandés** | 50H | F-GATD

Equipements à potentiel

N° OPS	Tâches à effectuer	CRIT	Exec.	Cont.
1	ED : ATA 74-B21 Magnétos suivant CMM Slick L-1363 §3.3		RFC	JAN
2	LB : ATA 27-1 Chaîne du volant de commande suivant AMM chap. 12-20-00		JAN	
3	LB : ATA 27-2 Chaînes de rentrée/sortie des volets suivant AMM chap. 12-20-00		JAN	
4	LB : ATA 52-1 Mécanismes de verrouillage des portes suivant AMM chap. 12-20-00		JAN	
5	LB : ATA 57-1 Axes orifices de ventilation des ailes suivant AMM chap. 12-20-00		JAN	
6	VE : ATA 79-B9 Radiateur d'huile suivant AMM chap. 79-20-00		NRC	RFC
7	SC : ATA 37-3 Filtre régulateur dépression suivant AMM chap. 37-10-00		NRC	RFC
8				
9				
10				
11				
12				
13				
14				
15				
16				
17				
18				
19				
20				
21				
22				
23				
24				
25				

Observations : *(noter le n° de l'item correspondant)* 1/ magnétos inspectées suivant slick L1363 - §3.3 RAS
6 : Nettoyé suivant AMM 79-20-00
7 : Remplacé suivant AMM 37-10-00
2 : Lubrification suivant AMM chap 12-20-00
3 : Lubrification suivant AMM chap 12-20-00
4 : Lubrification suivant AMM chap 12-20-00 5/ axes lubrifiés

Travaux supplémentaires

N° OPS	Tâches à effectuer	CRIT	Exec.	Cont.
1	Vérification allumage moteur (bougie, magnéto...) AMM PA28/181 71-00-00		NRC	RFC
2	Remplacement mécanisme de profondeur AMM PA28/181 27-10-00		JAN	RFC
3	Remplacement des échapements AMM PA28/181 78-00-00		JAN	RFC
4	Remplacement joint de porte + réglage AMM PA28/181 52-10-00		JAN	RFC
5	Reprise de l'antidérappant		JAN	
6	Replacement boa réchauffage cabine		JAN	
7	Remplacement cover assy engine control		JAN	
8	Remplacement support de boussole		JAN	
9			JAN	
10				

Observations : *(noter le n° de l'item correspondant)* 1/ vérifié RAS 71-00-00
2 : Remplacement mécanisme de profondeur
3 : Remplacement échappement
4 : Replacement joint de porte + réglage
5 : Reprise antidérappant
6 : Replacement Boa
7 : Replacement cover assy
8 : Replacement support Boussole
1 : Vérification système allumage

Rappel : = autocontrôle
= contrôle croisé
= contrôle par personnel habilité

DT N° 18-077 | **Travaux Découverts** | 50H | F-GATD

19/09/18

N° OPS	Tâches à effectuer	CRIT	Exec	Cont
1	Remplacement du cable arrière train de atterrissage		JAN	RFC
2	Remplacement des poulies Actuator directeur train de atterrissage		JAN	RFC
3	Remplacement des joints internes parking brake		JAN	RFC
4	Traitement de la corrosion baffle moteur avant droite		JAN	
5	Fonctionnement selecteur commande indicateur extérieure		NFE	NR
6	corrosion cylindres cylindre		NFE	NR
7				
8				
9				
10				
11				
12				
13				
14				
15				
16				
17				
18				
19				
20				
21				
22				
23				
24				
25				

Observations : *(noter le n° de l'item correspondant)*

1 : Remplacement Cable Arrivée train
2 : Remplacement des poulies
3 : Remplacement Joint parking brake
4 : Traitement corrosion Baffle moteur
5 : reprise fixation couvercle indicateur selecteur AMM 28.10.00
6 : Traitement corrosion

Visa et acceptation Client des Travaux Demandés		Visa Responsable Principal
Date : 01.10.2018 Heure UTC : 12:00		

DT N° 18-077

Travaux Reportés ou à suivre
19/09/18

50H	F-GATD

N°	Item	Cause du report	Visite report	Temps M.O.	P/N à commander	Réf. CF
1	Nil					
2						
3						
4						
5						
6						
7						
8						
9						
10						
11						
12						
13						
14						
15						
16						

Visa Contrôle :

Visa et acceptation client :

Date : **Heure UTC :**

DT N° **18-077** **Récapitulatif Dossier de Travaux**

Date :	**19/09/18**	**Type de Travaux :**	**VP50H**

Aéronef / Equipement

Type / P/N :	**PA28-181**	**S/N :**	**28-7890138**	**Immat. :**	**F-GATD**

En signant ci-après, le technicien atteste : sa participation aux taches, qu'il a controlé que tout son outillage est présent dans sa caisse à l'issue de la maintenance et que toutes les trappes déposées ont été reposées

Exécutants :			**Contrôleurs :**		
Nom	**Visa**	**Signature**	**Nom**	**Visa**	**Signature**
JEAN S.	JSN		ROUFFIGNAC B.	RR	
ROUFFIGNAC B.	RR				
Noré L	NRE				

Outillage utilisé

P/N	**S/N**	**Péremption**	**Restitution**
111 AIR	14 0084766	11/18	
2502 MRMH 1/2	312600417	11/18	
MR R100 F	1529	11/18	
BT-33-75-D	71 322	11/18	

Réception Visa :

Clôture Visa :

1. Approving competent Authority / Country Autorité / Pays compétent	2.	3. Form tracking number N° de repère du formulaire
DIRECTION GENERALE DE L'AVIATION CIVILE **France**	**AIRCRAFT CERTIFICATE OF RELEASE TO SERVICE** **Certificat d'approbation pour remise en service aéronef**	18-077

4. Approved Organisation name and address / Nom et adresse de l'Organisme Agréé	5. Work Order / Contract / Invoice Bon de commande / Contrat / Facture
Air Tourisme Instruction Services - Zone Aviation Générale - Aéroport Martinique Aimé Césaire - 97232 LE LAMENTIN - Martinique (F.W.I.)	SAGA 13-2018

6. Model / Type	7. Registration Immatriculation	8. A/C Serial number Numéro de série aéronef	9. Engines Serial Number / N° de série des moteurs	10. APU Serial number N° de série du Groupe Aux.	11. Operator / Exploitant
PA28-181	F-GATD	28-7890138	Moteur #1 : L-30677-36AC Moteur #2 :	N/A	S.A.G.A Eurl

12. Status - Work performed / Etat - Travaux effectués : Type visite : 50H Autres travaux : NIL

CN/AD/SB appliqués :
US-2017-14-04

Tâches kardex :
ED : ATA 74-B21 Magnétos suivant CMM Slick L-1363 §3.3 ; LB : ATA 27-1 Chaîne du volant de commande suivant AMM chap. 12-20-00 ; LB : ATA 27-2 Chaînes de rentrée/sortie des volets suivant AMM chap. 12-20-00 ; LB : ATA 52-1 Mécanismes de verrouillage des portes suivant AMM chap. 12-20-00 ; LB : ATA 57-1 Axes orifices de ventilation des ailes suivant AMM chap. 12-20-00 ; VE : ATA 79-B9 Radiateur d'huile suivant AMM chap. 79-20-00 ; SC : ATA 37-3 Filtre régulateur dépression suivant AMM chap. 37-10-00

Autres travaux :
Vérification allumage moteur (bougie, magnéto...) AMM PA28/181 71-00-00 ; Remplacement mécanisme de profondeur suivant AMM PA28/181 27-10-00 ; Remplacement des échapements suivant AMM PA28/181 78-00-00 ; Remplacement joint de porte + réglage AMM PA28/181 52-10-00 ; Reprise de l'antidérappant ; Remplacement boa réchauffage cabine ; Remplacement cover assy engine control ; Remplacement support de boussole ; Remplacement câble arrière trim profondeur AMM PA28/181 27.10.00 ; Remplacement poulies ailerons, direction, trim profondeur AMM PA28/181 27.10.00 ; Remplacement joints interne parking brake AMM PA28/181 32.40.00 ; Traitement corrosion baffle moteur avant droite ; Vis cadre support selecteur essence serrée ; Traitement corrosion ailettes cyl 1 et 2 ;

13. Remarks / Remarques :
Travaux reportés ou à suivre :
Nil

14. Approved maintenance programme / Programme d'entretien approuvé			15. Work pack reference / Réf. du dossier de visite	16. Date of performance / Date des travaux		17. Aircraft flying hours	18. Aircraft cycles
Issue / Edition	Revision	Date		Beginning / Début	End / Fin	Heures de vol	Cycles
2	0	avr.-13	18-077	19/09/18	09/10/18	9731.3	N/A

19. Part 145.A.50 Release to Service / Approbation pour Remise en Service selon la Partie 145.A.50
Certifies that unless otherwise specified in block 13, the work identified in block 12 and described in block 13, was accomplished in accordance with PART 145 and in respect to that work the aircraft is considered ready for release to service
Certifie que, sauf indication contraire spécifiée en case 13, les travaux identifiés en case 12 et décrits en case 13 ont été rélaisés conformément à la PARTIE 145 et qu'au vu de ces travaux, l'aéronef est considéré prêt à la remise en service.

☒ subject to the satisfactory performance of the test flight
sous réserve de l'exécution satisfaisante du vol de contrôle

☐ for ferry flight and under the conditions in conformity with document of approval associated with this ferry flight ref :
pour vol de convoyage technique et dans les conditions conformes au document d'apporbation associé à ce vol de convoyage réf :

20. Authorized Signature / Signature	21. Certificate / Approval Ref. N° N° de certificat / d'agrément	22. Name / Nom	23. Date (dd/mm/yy) / UTC time Date (jj/mm/aa) / heure UTC	24. Location / Lieu
Personnel de Certification RFC ATIS 05-01 FR.145.566	FR.145.566	Rouffignac Bernard	09/10/2018 14H00	TFFF

N°	Points à vérifier	Contrôleur
1	Toutes les opérations d'entretien commandées par le client et les actions correctives en résultant ont bien été exécutées conformément aux déclarations signées	Visa contrôle
2	Toutes les opérations d'entretien y compris les réparations, ont bien été exécutées selon les procédures spécifiées dans le MOE et selon les données constructeur approuvées applicables à l'aéronef et à jour	Visa contrôle
3	Tous les outillages/ équipements /pièces ou matériels étrangers ont été retirés et tous les panneaux déposés ont bien été reposés	Visa contrôle
4	Toutes les modifications ont bien été effectuées, vérifiées et testées selon de la documentation approuvée par le constructeur et l'autorité d'immatriculation de l'aéronef.	Visa contrôle NA
5	Tous les travaux reportés ont bien été justifiés, n'affectent pas la navigabilité de l'aéronef et ont bien été acceptés par le client (présence d'une liste récapitulative)	Visa contrôle NA
6	Les modifications affectant les limitations ou les informations contenues dans les documents de navigabilité sont connues de l'exploitant pour qu'il puisse mettre à jour sa documentation technique. (ex : nouvelle fiche de pesée)	Visa contrôle NA
7	Toutes les CN et AD demandées sur le bon de commande des travaux ont bien été appliquées dans les limites imposées (heures, cycles ou dates mentionnées sur les ordres d'exécution)	Visa contrôle
8	Toutes les grilles d'émargement et ordres d'exécution ouverts font bien l'objet d'une fermeture: date et visa de l'exécutant sur le bordereau de signatures et sur les cartes et ordres d'exécution.	Visa contrôle
9	Tous les travaux supplémentaires découverts en visite sont : - soit clôturés sur la liste des travaux découverts en visite - soit mis en liste des travaux reportés	Visa contrôle
10	Toutes les tâches soumises à contrôle sont visées par un contrôleur	Visa contrôle
11	Tous les équipements installés sur avion sont munis d'une EASA Form one ou équivalent (documents conformes à PI 005) et les tests fonctionnels après installation ont été exécutés et enregistrés	Visa contrôle
12	La cabine a été inspectée pour en vérifier la conformité avec le plan d'armement	Visa contrôle
13	Si la visite est fractionnée, vérifier que la butée maximale heure visite avion + la tolérance ne sera pas atteinte avant la fin de la dernière fraction	Visa contrôle NA
14	Si l'APRS peut être prononcée, en base, le faire sur le certificat d'APRS avec report sur le CRM ou carnet de route avion. Immédiatement après signature mais avant la remise en ligne de l'avion transmettre une copie du certificat d'APRS + la liste des travaux reportés à l'exploitant. Si l'APRS est prononcée en piste, le faire directement sur CRM (avec réponse à chaque item traité ou report signalé dans le cadre réservé à cet effet) ou carnet de route. **Une copie du CRM est archivée avec le dossier de visite**	Visa contrôle

PROGRAMME D'ENTRETIEN VISITE 50 HEURES

OUVERTURE DE LA VISITE

N° ITEM	ITEM	TACHE A EFFECTUER ET/OU REMARQUE	CRIT.	EXEC.	CONT.
Effectuer un point fixe et contrôler les éléments suivants :					
H1	Pompe à carburant et sélecteur	Manœuvrer et vérifier fonctionnement correct		NRE	RR
H2	Pression et quantité carburant	Vérifier valeur correcte		NRE	RR
H3	Pression et température d'huile	Vérifier valeur correcte		NRE	RR
H4	Alternateur	Vérifier débit correct		NRE	RR
H5	Pression d'amission	N/C, hélice à pas fixe			
H6	Réchauffage carburateur	Vérifier fonctionnement correct		NRE	RR
H7	Frein de parking	Vérifier fonctionnement		NRE	RR
H8	Pompe à vide auxiliaire	N/C, équipement non installé			
H9	Indicateur de dépression	Vérifier valeur correcte		NRE	RR
H10	Instruments gyroscopiques	Vérifier absence de bruits suspects		NRE	RRC

Observations : *(noter le numéro de l'item correspondant)*

H1 : Fonctionnement incorrect du selecteur carburant ~~remarqué u's du cache~~ TSUP

N° ITEM	ITEM	TACHE A EFFECTUER ET/OU REMARQUE	CRTT.	EXEC.	CONT.
Effectuer un point fixe et contrôler les éléments suivants (suite) :					
H11	Chauffage cabine	Vérifier fonctionnement		NLE	RK
H12	Interrupteur magnétos	Vérifier fonctionnement correct		NLE	RK
H13	Sélection magnétos	Vérifier perte de tours lors de la sélection		NLE	RK
H14	Manette des gaz et mélange	Manœuvrer sur toute la plage **Ne pas effectuer de changements brusques**		NLE	RK
H15	Hélice	Vérifier fonctionnement régulier		NLE	RK
H16	Moteur	ⓘ Effectuer le test de puissance maximale statique suivant AMM chapitre 71 Chart 7103 avec températures en °C		NLE	RK

21°C	2240	21°C	2250	19°C	2250	17°C	2260	16°C	2270	13°C
27°C	2230	27°C	2240	24°C	2250	23°C	2260	20°C	2270	18°C
29°C	2230	29°C	2240	27°C	2250	25°C	2260	23°C	2270	21°C
32°C	2220	32°C	2230	30°C	2240	28°C	2250	26°C	2260	23°C
35°C	2200	35°C	2220	33°C	2230	31°C	2240	28°C	2260	26°C

H17	Ralenti	Vérifier		NLE	RK
H18	Equipements électroniques	Vérifier fonctionnement correct		NLE	RK
H19 à 21	/	Equipements non installés sur F-GATD			
H22	Dossier de visite	Vérifier conformité au bon de commande client, présence des grilles d'émargements et des travaux supplémentaires		RK	

Observations : *(noter le numéro de l'item correspondant)*

ZONE : HELICE

N° ITEM	ITEM	TACHE A EFFECTUER ET/OU REMARQUE	CRIT.	EXEC.	CONT.
A1	Cône hélice et flasque	Inspecter		NRE	RK
A2	Pales hélice	Rechercher entailles, corrosion et criques		NRE	RK
A3	Hélice	Rechercher fuites de graisse et d'huile (N/A : hélice à pas fixe)			
A4	Hélice	Lubrifier suivant AMM chap. 12 (N/A : hélice à pas fixe)			

Observations : *(noter le numéro de l'item correspondant)*

ZONE : GROUPE MOTOPROPULSEUR

N° ITEM	ITEM	TACHE A EFFECTUER ET/OU REMARQUE	CRIT.	EXEC.	CONT.
Relier le circuit primaire des magnétos à la masse avant toute intervention sur le moteur					
B1	Capots moteur	Déposer les capots moteurs et vérifier absence de détérioration		NRE	RK
B3	Carter huile	Vidanger		NRE	RK
B4	Tamis d'aspiration d'huile	Nettoyer, rechercher présence de corps étrangers	🧍	NRE	NRE/RK
B5	Filtre à huile	Remplacer et rechercher présence de corps étrangers ⓘ Voir Service Bulletin Lycoming n°480	🧍🧍	NRE	RK

Observations : *(noter le numéro de l'item correspondant)*

N° ITEM	ITEM	TACHE À EFFECTUER ET/OU REMARQUE	CRIT.	EXEC.	CONT.
B7	Tuyauteries d'huile et raccords	Vérifier absence de fuites, usure par frottement, entailles et criques et vérifier sécurité. S'assurer que le Service Bulletin Piper n°936 a bien été appliqué		NRE	RK
B10	Huile	Effectuer le plein d'huile *Voir AMM chapitre 12*	↑	NRE	NRE/RK
B12	Bougies	Déposer, tester, nettoyer et ajuster l'écart des électrodes si nécessaire. *Voir Service Instruction Lycoming n°1042* ✋ En cas de bougies encrassées, permuter les bougies du bas avec celles du haut.	↑	NRE	NRE/RK
B13	Câbles, contacts des câbles et céramique	Rechercher traces de corrosion et dépôts. Vérifier fixations des câbles et s'assurer que les connexions au niveau des bougies et des magnétos sont en bon état.		NRE	RK
B16	Caches culbuteurs	Rechercher traces de fuites. En cas de fuites, remplacer le joint et torquer les vis de caches à 50 in.-lbs. Rechercher traces de peinture brûlée sur les cylindres qui sont signes de surchauffe. Une surchauffe indique que l'intérieur du cylindre a subi des dommages et la cause de cette surchauffe doit être déterminée et éliminée avant de remettre l'avion en service. *Une forte décoloration ou l'apparition d'un suintement au niveau de la jonction du cylindre avec le corps du moteur est habituellement due au rejet de lubrifiant des filetages (utilisé lors du montage des cylindres en usine) ou à une légère fuite de gaz d'échappement qui cessera après quelques heures d'utilisation. Ceci n'affecte pas le fonctionnement ou les performances du moteur. Par contre, si ces traces persistent, le cylindre doit être remplacé.*		NRE	RK

Observations : *(noter le numéro de l'item correspondant)* B16 : Légère corrosion cylindre 1 et 2 → TJ VP

N° ITEM	ITEM	TACHE A EFFECTUER ET/OU REMARQUE	CRIT.	EXEC.	CONT.
B24	Filtre à air	Déposer le filtre à air et le tapoter légèrement pour en retirer la poussière. Remplacer le filtre si nécessaire		~~NRE~~	RA
B25	Carburateur	Purger le carburateur et nettoyer le tamis d'entrée carburant	🧍 🧍	NRE	NRE/RE
B26	Clapet et boîtier du réchauffage carburateur	Vérifier état. Vérifier le torquage des vis de fixation du carburateur. Le torquage correct pour ces vis est de 40 à 50 in.-lbs. Vérifier le serrage des vis de fixation du boîtier d'entrée d'air.		NRE	RE
B27	Mises à l'air libre	Rechercher traces de suintement d'huile ou de carburant		NRE	RA
B28	Joints des pipes d'admission	Vérifier absence de fuites et serrage correct des colliers		NRE	RA
B29	Boas d'entrée d'air	Vérifier état et fixation, remplacer si nécessaire (SB356 N/A au PA28-181)		NRE	RE
B32	Circuit carburant	Rechercher les fuites et vérifier fixations		NRE	RA
B33	Pompe à carburant électrique	Nettoyer le filtre de la pompe électrique et vérifier son fonctionnement.	🧍 🧍	NRE	NRE/RA
B35	Bol du filtre à carburant et tamis	ⓘ Déposer et nettoyer suivant Service Letter Piper n°SL 1141.	🧍 🧍	NRE	NRE/RE
B38	Commande des gaz, de mélange et de réchauffage carburateur	Vérifier débattement, liberté de manœuvre, fonctionnement correct, fixations et lubrifier si nécessaire		NRE	RE

Observations : *(noter le numéro de l'item correspondant)*

N° ITEM	ITEM	TACHE A EFFECTUER ET/OU REMARQUE	CRIT.	EXEC.	CONT.
B39	Pipes d'échappement, semelles de fixation et joints, silencieux	Vérifier état des collecteurs d'échappement. Rechercher traces de fuite au niveau de la jonction des cylindres avec les semelles de fixation des pipes d'échappement. Si elles sont desserrées, elles doivent être déposées et aplanies avant le remontage et le serrage. Remplacer les joints si nécessaire. Vérifier fixation correcte des raccords et absence de fuites.		NLE	RR
B45	Câblage électrique du moteur et accessoires	Vérifier le câblage. Les câbles dont l'isolant est endommagé doivent être remplacés. Remplacer les attaches défectueuses ou les câbles desserrés et vérifier sécurité et propreté des connecteurs.		NLE	RR
B56	Réservoir de freins	Vérifier niveau du liquide hydraulique, compléter si nécessaire.		NLE	RR
B60	Capots moteur	Vérifier absence de dommages et bon état des fixations. Toute partie manquante du système de refroidissement doit être remplacée ou réparée avant la remise en service de l'aéronef. Remonter les capots moteur.	↑	JAN	JAN

Observations : *(noter le numéro de l'item correspondant)* B39 : Silencieux Avant et Arrière HS
Pipe cinquée

T.S. BC

ZONE : CABINE

N° ITEM	ITEM	TACHE A EFFECTUER ET/OU REMARQUE	CRIT.	EXEC.	CONT.
C10	Feux de navigation, phare d'atterrissage, éclairage cabine et instruments	Vérifier fonctionnement		RR	

Observations : *(noter le numéro de l'item correspondant)*

ZONE : FUSELAGE ET EMPENNAGE

N° ITEM	ITEM	TACHE A EFFECTUER ET/OU REMARQUE	CRIT.	EXEC.	CONT.
D3a	Logement batterie, batterie et câbles et brides de fixation	Vérifier. Rincer le logement batterie si nécessaire et vérifier niveau électrolyte.		NCE	RFE
D3b	Batterie	N/C, Archer II			
D8	Niveau fréon	N/C, aéronef non climatisé			
D9	Prise d'air du condenseur de climatisation	N/C, aéronef non climatisé			
D28	Lubrification	ⓘ Lubrifier les éléments de la zone fuselage et empennage selon schéma de l'AMM chapitre 12		NCE	RFE

Observations : *(noter le numéro de l'item correspondant)*

ZONE : AILES

N° ITEM	ITEM	TACHE A EFFECTUER ET/OU REMARQUE	CRIT.	EXEC.	CONT.
E9	Lubrification	ⓘ Lubrifier les éléments de la zone ailes selon schéma de l'AMM chapitre 12		NCE	RFE

Observations : *(noter le numéro de l'item correspondant)*

NCE

NCE

ZONE : TRAIN D'ATTERRISSAGE

N° ITEM	ITEM	TACHE A EFFECTUER ET/OU REMARQUE	CRIT.	EXEC.	CONT.
F1	Amortisseurs	Vérifier que la garde est correcte ⓘ Voir AMM chapitre 32 Vérifier niveau liquide hydraulique si nécessaire		NOE	RAR
F8	Pneus	Vérifier pression des pneumatiques ⓘ Voir AMM chapitre 6		NOE	RAR
F20	Lubrification	ⓘ Lubrifier les éléments de la zone train d'atterrissage selon schéma de l'AMM chapitre 12		NOE	RAR

Observations : *(noter le numéro de l'item correspondant)*

CLOTURE DE LA VISITE

N° ITEM	ITEM	TACHE A EFFECTUER ET/OU REMARQUE	CRIT.	EXEC.	CONT.
Effectuer un point fixe et contrôler les éléments suivants :					
H1	Pompe à carburant et sélecteur	Manœuvrer et vérifier fonctionnement correct		RAR	
H2	Pression et quantité carburant	Vérifier valeur correcte		RAR	
H3	Pression et température d'huile	Vérifier valeur correcte		RAR	
H4	Alternateur	Vérifier débit correct		RAR	

Observations : *(noter le numéro de l'item correspondant)*

N° ITEM	ITEM	TACHE A EFFECTUER ET/OU REMARQUE	CRIT.	EXEC.	CONT.
Effectuer un point fixe et contrôler les éléments suivants (suite) :					
H5	Pression d'amission	N/C, hélice à pas fixe			
H6	Réchauffage carburateur	Vérifier fonctionnement correct		RFC	
H7	Frein de parking	Vérifier fonctionnement		RFC	
H8	Pompe à vide auxiliaire	N/C, équipement non installé			
H9	Indicateur de dépression	Vérifier valeur correcte		RFC	
H10	Instruments gyroscopiques	Vérifier absence de bruits suspects		RFC	
H11	Chauffage cabine	Vérifier fonctionnement		RFC	
H12	Interrupteur magnétos	Vérifier fonctionnement correct		RFC	
H13	Sélection magnétos	Vérifier perte de tours lors de la sélection		RFC	
H14	Manette des gaz et mélange	Manœuvrer sur toute la plage **Ne pas effectuer de changements brusques**		RFC	
H15	Hélice	Vérifier fonctionnement régulier		RFC	
H16	Moteur	ⓘ Effectuer le test de puissance maximale statique suivant AMM chapitre 71 Chart 7103 avec températures en °C		RFC	

21°C	2240	21°C	2250	19°C	2250	17°C	2260	16°C	2270	13°C
27°C	2230	27°C	2240	24°C	2250	23°C	2260	20°C	2270	18°C
29°C	2230	29°C	2240	27°C	2250	25°C	2260	23°C	2270	21°C
32°C	2220	32°C	2230	30°C	2240	28°C	2250	26°C	2260	23°C
35°C	2200	35°C	2220	33°C	2230	31°C	2240	28°C	2260	26°C

Observations : *(noter le numéro de l'item correspondant)*

N° ITEM	ITEM	TACHE A EFFECTUER ET/OU REMARQUE	CRIT.	EXEC.	CONT.
H17	Ralenti	Vérifier		RPZ	
H18	Equipements électroniques	Vérifier fonctionnement correct		RPZ	
H19 à 21	/	Equipements non installés sur F-GATD			
H22	Dossier de visite	Vérifier conformité de dossier de visite et des grilles d'émargement		RPZ	

Observations : *(noter le numéro de l'item correspondant)*

AD Appliqué par NRE RAS

2017-14-04 Piper Aircraft, Inc.: Amendment 39-18948; Docket No. FAA-2016-9254; Directorate Identifier 2015-CE-030-AD.

(a) Effective Date

This AD is effective August 15, 2017.

(b) Affected ADs

This AD replaces AD 95-26-13, Amendment 39-9472 (60 FR 67321, December 29, 1995) ("AD 95-26-13").

(c) Applicability

This AD applies to Piper Aircraft, Inc. Models PA-28-140, PA-28-150, PA-28-151, PA-28-161, PA-28-160, PA-28-180, PA-28-181, PA-28-235, PA-28-236, PA-28R-180, PA-28R-200, PA-28R-201, PA-28S-160, PA-28S-180, PA-32-260, PA-32-300, PA-32-301, PA-32-301T, PA-32R-300, PA-32R-301 (SP), PA-32R-301 (HP), PA-32R-301T, PA-32RT-300, PA-32RT-300T, and PA-32S-300 airplanes, all serial numbers, that are:

(1) Equipped with one or more oil cooler hose assemblies that do not meet technical standard order C53a (TSO-C53a), Type D requirements; and

(2) Certificated in any category.

(d) Subject

Joint Aircraft System Component (JASC)/Air Transport Association (ATA) of America Code 79, Engine Oil.

(e) Unsafe Condition

AD 95-26-13 was prompted by numerous incidents/accidents caused by rupture or failure of the oil cooler hose assemblies. This AD action was prompted by requests to clarify the intent of AD 95-26-13. We are issuing this AD to prevent rupture or failure of the oil cooler hose assemblies, which could result in engine stoppage with consequent loss of control.

(f) Compliance

Comply with this AD within the compliance times specified, unless already done. You may review the flow chart found in appendix 1 to assist you in complying with the actions of this AD.

(g) Inspection Procedures for an Oil Cooler Mounted AT or AFT of the Rear of the Engine

NRE For any oil cooler hose assemblies that do not meet TSO-C53a, Type D requirements: Within the next 100 hours time-in-service (TIS) after February 5, 1996 (the effective date retained from AD 95-26-13), and repetitively thereafter at intervals not to exceed 100 hours TIS, inspect the fire sleeve of

each oil cooler hose assembly for soaked oil, a brownish or whitish color, and any evidence of brittleness or deterioration as a result of heat or oil seepage. See figure 1 to paragraphs (g) and (h) of this AD for additional information.

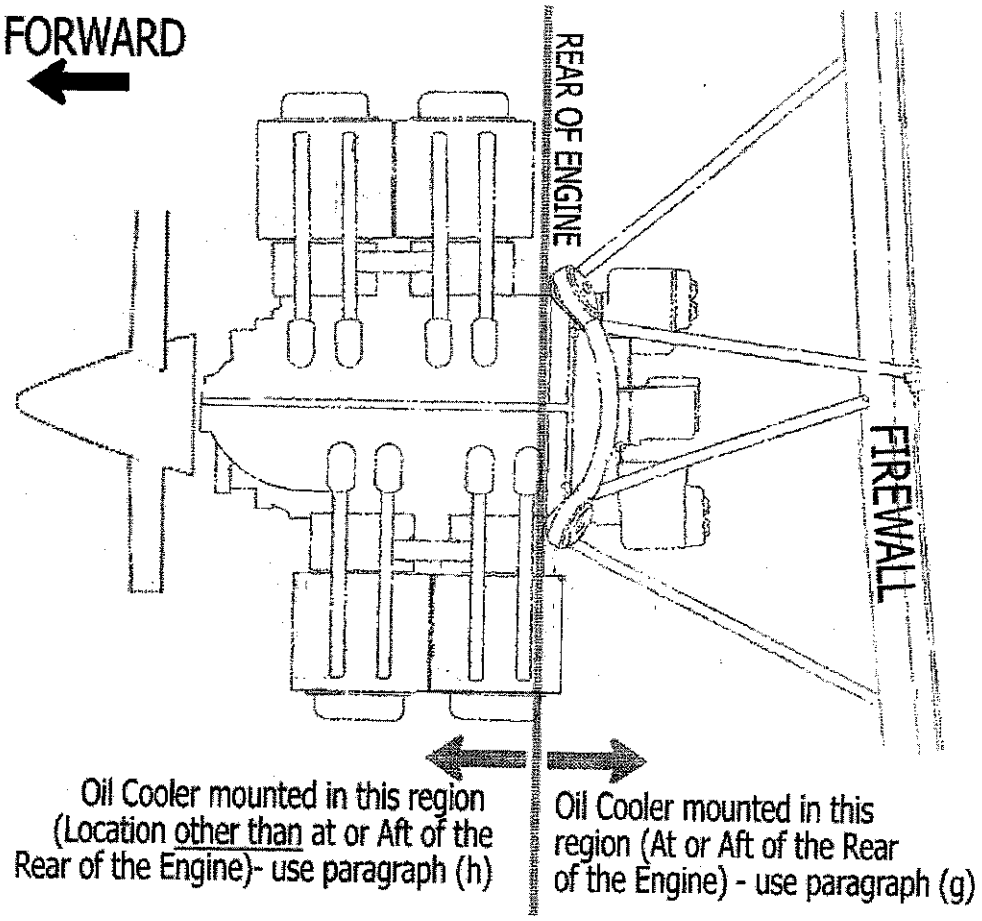

Figure 1 to paragraphs (g) and (h) of this AD: Oil cooler

Note 1 to paragraphs (g) and (h)(1) of this AD: Although not required by this AD, the FAA recommends that an oil cooler hose assembly flexibility test be done at 100-hour TIS intervals by gently lifting each oil cooler hose assembly in several places along its bottom surface, ideally at the center of an arc. If the oil cooler hose assembly moves slightly, either from side-to-side or upward, then some flexibility remains. If the oil cooler hose assembly appears hardened or inflexible, replacement is recommended.

(h) Inspection Procedures for an Oil Cooler Mounted in a Location Other Than AT or AFT of the Rear of the Engine

(1) For any oil cooler hose assemblies that do not meet TSO-C53a, Type D requirements: Within the next 100 hours TIS after February 5, 1996 (the effective date retained from AD 95-26-13), and repetitively thereafter at intervals not to exceed 100 hours TIS, inspect the fire sleeve of each oil cooler hose assembly for soaked oil, a brownish or whitish color, and any evidence of brittleness or deterioration as a result of heat or oil seepage. See figure 1 to paragraphs (g) and (h) of this AD for additional information.

(2) For any oil cooler hose assemblies that do not meet TSO-C53a, Type D requirements: Within the next 100 hours TIS after February 5, 1996 (the effective date retained from AD 95-26-13) and repetitively thereafter at intervals not to exceed 100 hours TIS, inspect the oil cooler hose assemblies

DT 18-077
inspected per RAC #1 #2 RAS
2 contact point
M20-P1 assy/mag

 mag 1 et 2

WARNING: DO NOT FLY AIRCRAFT IF MAGNETOS ARE NOT FUNCTIONING NORMALLY.

3.2 100-HOUR INSPECTION

RR The following maintenance procedures must be followed every 100 hours of service or at annual inspection, whichever comes first. Do maintenance on each magneto.

3.2.1 ADJUST TIMING TO ENGINE

WARNING: MAKE SURE IGNITION SWITCH IS IN THE "OFF" POSITION AND THE CONDENSER LEAD IS GROUNDED PRIOR TO ADJUSTING THE TIMING.

RR A. Turn the engine crankshaft in the normal direction of rotation until the No. 1 cylinder is in the full-advance firing position, following engine manufacturer's procedure for timing of magnetos.

3.2.2 INSPECT WIRING CONNECTIONS AND CONDITIONS

RR Refer to Harness Maintenance Manual L-1499 for complete wiring inspection instructions.

3.2.3 INSPECT VENT HOLES - NON-PRESSURIZED MAGNETOS

RR Vent holes must be clean and clear of any obstruction. Correct as necessary.

3.2.4 INSPECT P-LEAD ATTACHMENT

RR The P-lead connects the magneto primary circuit to the airframe ignition switch. If the P-lead is disconnected, the magneto will be "ON" and will fire the spark plug if the propeller is rotated. Possible fatal injury can result Confirm that the P-lead is securely attached to the condenser stud. Torque P-lead nut to 13-15 in-lbs.

CAUTION: IF THE 13-15 IN-LBS TORQUE LIMIT IS EXCEEDED, CONDENSER PERFORMANCE MAY BECOME INTERMITTENT OR TOTALLY INOPERATIVE. REPLACE THE CONDENSER IF THE TORQUE LIMIT IS EXCEEDED, FOLLOWING THE INSTRUCTIONS IN SECTIONS 6.5 SNF 7.12 OF THIS MANUAL.

Follow the airframe manufacturer's recommendations to make sure the ignition switch and P-lead are operating properly.

3.2.5 INSPECT SWITCH WIRE - RETARD BREAKER MAGNETOS ONLY

N/A The retard breaker lead connects the retard contact points to the ignition vibrator. If this lead is disconnected the starting circuit will become inoperative.

CAUTION: IF THE 13-15 IN-LBS TORQUE LIMIT IS EXCEEDED, THE STARTING CIRCUIT MAY BECOME INOPERATIVE.

Follow the airframe manufacturer's recommendations to make sure that the ignition switch and the retard breaker lead are operating properly.

3.2.6 INSPECT TACHOMETER DRIVE CONTACT WIRE - TACHOMETER DRIVE MAGNETOS ONLY

N/A The tachometer lead connects the tachometer drive contact points to the tachometer. If this lead is disconnected, the tachometer will become inoperative. Follow the airframe manufacturer's recommendations to make sure that the tachometer drive lead is attached properly.

3.2.7 INSPECT TURBO FILTER - PRESSURIZED MAGNETOS ONLY

Inspect for yellow or red color, condensation or free standing water or foreign matter in the filter element. (See Figure 3.2.7). If the filter is contaminated, reference the engine and/or airframe manufacturer's literature for pressurization system corrective action. Replace the turbo filter. If the filter shows contamination, the magneto must be removed and inspected for contaminant damage. Follow the procedures in Section 3.3 of this manual.

N/A

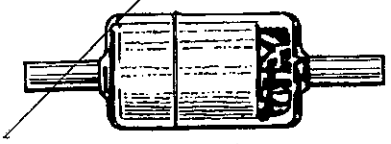

Figure 3.2.7

3.2.8 INSPECT INLET NOZZLE - PRESSURIZED MAGNETOS ONLY

Inspect and clean the inlet nozzle to make sure it is clean and free of obstruction. (See Figure 3.2.8). Yellow or white particles or any oily film in the inlet nozzle indicates moisture contamination and possible lack of pressurization. Reference the engine and/or airframe manufacturer's literature for pressurization system corrective action and do the internal magneto inspection if contamination exists.

N/A

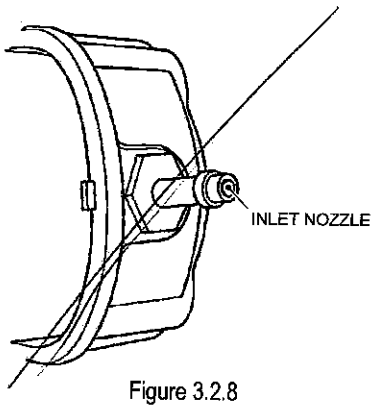

Figure 3.2.8

3.2.9 INSPECT ORIFICE VENT - PRESSURIZED MAGNETOS ONLY

Inspect and clean the orifice vent to make sure it is clean and free of obstruction. The orifice diameter is .025" ± .005". (See Figure 3.2.9).

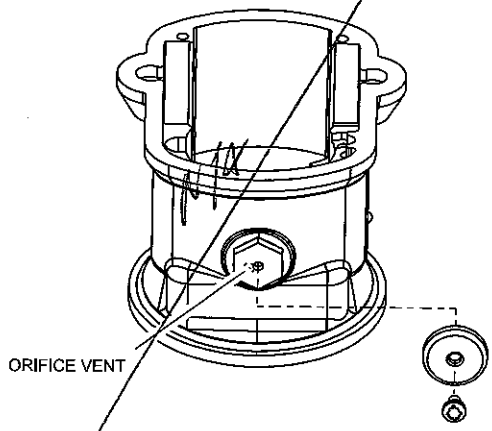

Figure 3.2.9

NOTE: ANY INDICATION OF CONTAMINATION OR MOISTURE CONTAMINATION DURING INSPECTION STEPS 3.2.7, 3.2.8. OR 3.2.9 REQUIRES INTERNAL MAGNETO INSPECTION.

3.3 250 AND 500-HOUR INSPECTION (KIT K3307)

Follow the instructions in Section 5.0, Removing Magneto from Engine. All of the procedures needed to do the 250 and 500-hour inspections are detailed in Section 6.0, Magneto Disassembly and Section 7.0, Magneto Assembly.

3.3.1 DISASSEMBLY AND CLEANING

NOTE: DISASSEMBLE THE MAGNETO ONLY TO THE EXTENT REQUIRED TO SUPPORT THIS INSPECTION.

Proceed with the magneto disassembly, following instructions in Section 6.0, Magneto Disassembly. When disassembled, return to Section 3.3.2.

3.3.2 INSPECT BALL BEARING ASSEMBLY

A. Inspect the ball bearing assembly by rotating the rotor shaft. Check for free movement. If the rotor shaft binds, sticks or feels loose in the bearing cap, replace the ball bearing assembly following the instructions in Section 7.0, Magneto Assembly.

NOTE: IF THE BEARINGS ARE REMOVED FROM THE SHAFT, THE BEARINGS MUST BE DISCARDED AND REPLACED.

3.3.3 INSPECT ROTOR

Inspect the rotor for damaged or worn keyway. Check the rotor bearing surfaces for wear.

A. Inspect the Oil Seal
Inspect the oil seal location on the shaft.

B. Assemble the Bearings and Rotor
Assemble the bearings and the rotor following the instructions in Sections 7.1 and 7.2, Magneto Assembly.

C. Inspect the Magneto Rotor Shaft

Inspect the magneto rotor shaft at the impulse coupling location. If the heel of the pawl has struck the shaft and caused the shaft to dimple in excess of .006 inch per side, the rotor shaft must be replaced. (See Figure 3.3.3).

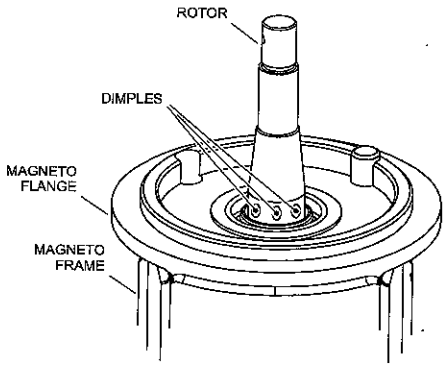

Figure 3.3.3

Use a 10X lighted magnification instrument to inspect the rotor shaft at the cam slot for cracking (See Figure 3.3.3A).The application of a suitable dye penetrant to the area prior to inspection is recommended. No cracking is allowed.

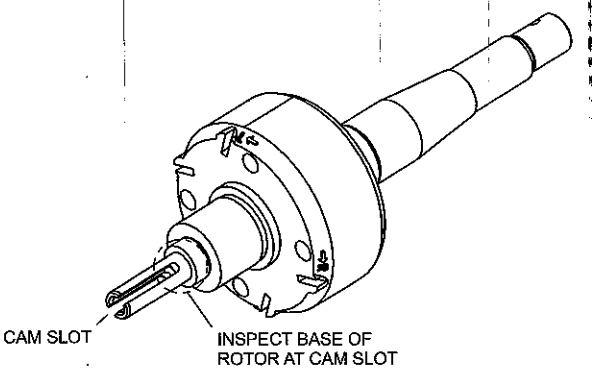

Figure 3.3.3A

3.3.4 INSPECT IMPULSE COUPLING - IMPULSE COUPLED MAGNETOS ONLY

WARNING: MAKE SURE IGNITION SWITCH IS IN THE "OFF" POSITION AND THE CONDENSER LEAD IS GROUNDED.

WARNING: THE FOLLOWING PROCEDURE AND STEPS IN THIS SECTION MUST BE ACCOMPLISHED WITH STRICT ADHERENCE TO THE REQUIREMENTS STATED HEREIN.

A. Clean Impulse Coupling

1. All portions of the impulse coupling must be cleaned, exposing the bare metal, to make sure of a reliable inspection.

2. Use a suitable grease dissolving solvent to remove all oil or sludge buildups on the impulse coupling.

B. Inspect Coupling

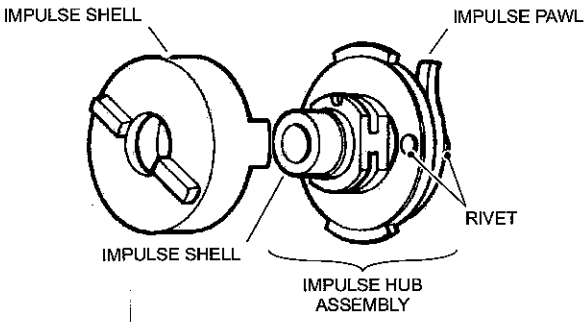

Figure 3.3.4

NOTE: IN MANY CASES, STRINGERS, INCLUSIONS, AND HEAT CHECKS MAY APPEAR AS SURFACE DISCONTINUITIES ON THE IMPULSE COUPLING COMPONENTS. THESE CONDITIONS ARE NORMAL AND GENERALLY DO NOT, BY THEMSELVES, REQUIRE IMPULSE COUPLING REPLACEMENT.

1. Use acceptable procedures to inspect the impulse coupling shell for cracks, rust or signs of corrosion. None of these conditions are acceptable. Minor cleaning to remove surface rust is acceptable. Replace the impulse coupling as necessary.

2. Inspect the impulse coupling spring for breaks, cracks, or rust pitting. None of these conditions are acceptable. Replace the impulse coupling spring or impulse coupling as necessary.

3. Inspect the impulse coupling hub for cracks, rust or signs of corrosion. None of these conditions are acceptable. Minor cleaning to remove surface rust is acceptable. Replace the impulse coupling as necessary.

4. Inspect the hub shaft and keyway for deformation or damage. Replace the impulse coupling as necessary.

5. Inspect the impulse coupling pawls. If the latching end that makes contacts with the stop pin in the magneto frame is rounded, peened, or excessively worn, replace the impulse coupling.

6. Inspect the pawl retaining rivets. If the rivets are loose or show indications of movement, replace the impulse coupling.

7. Install the T-155 Rivet Gauge over the rivet head. (See Figure 3.3.4A.)

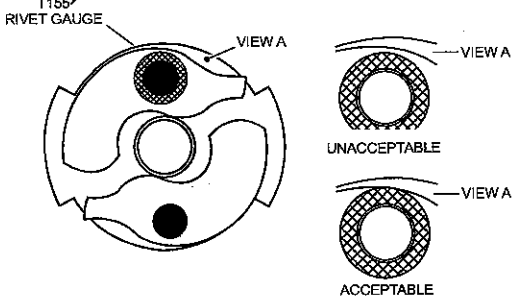

Figure 3.3.4A

8. Align the outer edge of the pawl with the outer edge of the impulse coupling plate. Lift the inner edge of the pawl upward and push the pawl outward. If the inner edge of the pawl is not lifted when the pawl is pushed outward, the gaging will not be accurate. (See Figure 3.3.4B).

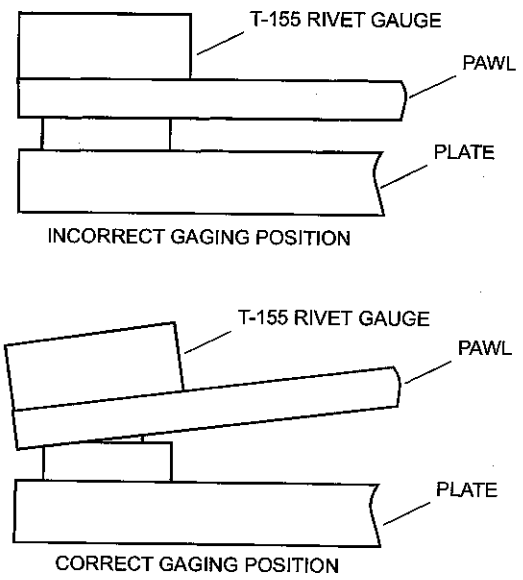

Figure 3.3.4B

9. Rotate the pawl in an arc while pushing upward and outward on the pawl.

10. If the edge of the pawl is visible beyond or can be felt to extend beyond the edge of the T-155 Rivet Gage, replace the coupling. (See Figure 3.3.4A)

11. Measure the clearance between the boss on the underside of each (2) impulse pawl and the pawl plate using a feeler gage. Position the latching end of the impulse pawl over the pawl plate as shown in Figure 3.3.4C.

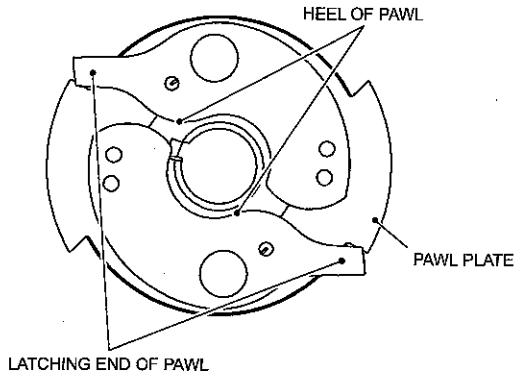

Figure 3.3.4C

12. The maximum clearance for pawls with one boss is 0.150 in. The maximum clearance for pawls with two bosses is 0.150 in. for left-hand rotation couplings and 0.140 in. for right-hand rotation impulse couplings. If the feeler gauge can pass between the full width of the boss and the pawl plate, replace the impulse coupling. (See Figure 3.3.4D). For coupling rotation, see magneto data plate.

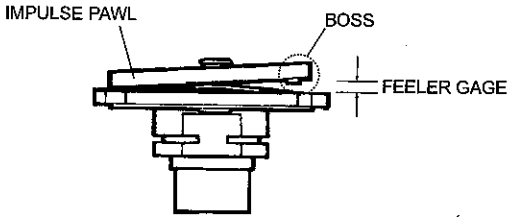

Figure 3.3.4D

C. Reassemble Impulse Coupling

1. Lubricate the pawl assembly with aircraft engine oil. Make sure that the pawls move freely.

2. Lubricate the hub and spring with aircraft engine oil.

3. Follow the reassembly instructions, Section 7.5 of this manual.

D. Inspect Stop Pin

1. Inspect the stop pin for looseness, cracks or corrosion. None of these conditions are acceptable. Replace the magneto frame as necessary. (See Figure 3.3.4E).

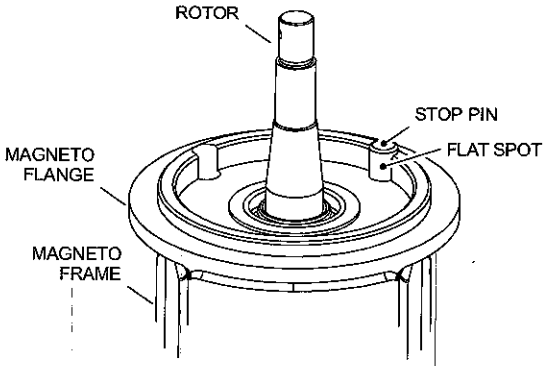

Figure 3.3.4E

2. Inspect the stop pin for flat spots. Flat spots must be measured using a dial caliper or similar measuring device. If the stop pin is worn, with a flat spot larger than 0.050" across, the magneto frame must be replaced.

E. Install Impulse Coupling.

Follow the instructions in Section 7.6 of this manual to install impulse coupling in magneto.

3.3.5 INSPECT DRIVER ASSEMBLY

A. Clean Driver Assembly

1. All portions of the driver assembly must be cleaned, exposing bare metal, to make sure of a reliable inspection.

2. Use a suitable grease dissolving solvent to remove all oil or sludge buildups on the driver assembly.

B. Inspect Driver Assembly

1. Inspect the driver assembly for cracks, rust or signs of corrosion. None of these conditions are acceptable. Minor cleaning to remove surface rust is acceptable. Replace the driver assembly as necessary.

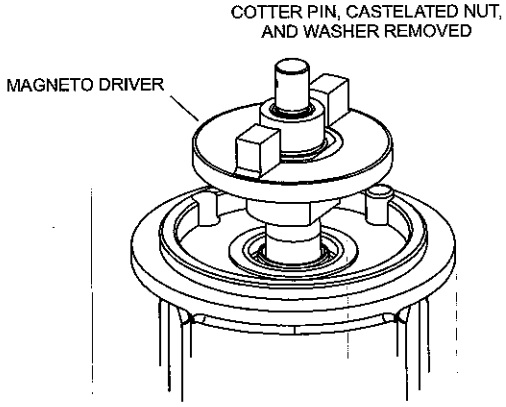

Figure 3.3.5

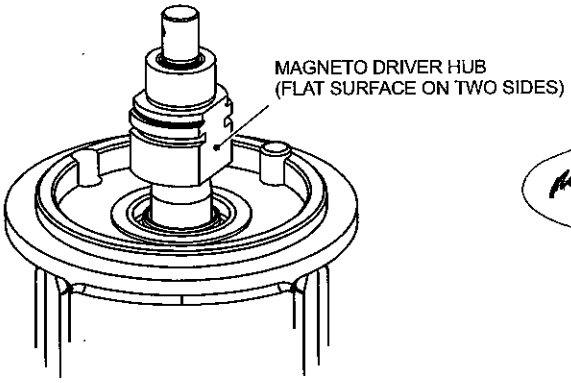

Figure 3.3.5A

C. Install Driver Assembly

Follow the instructions in Section 7.6 of this manual to the install driver assembly in magneto.

3.3.6 INSPECT COIL

A. Inspect coil for visible radial cracks. If any cracks are evident, replace the coil. (See Figure 3.3.6).

B. Inspect the coil for primary and secondary circuit resistance and continuity. The coil must be replaced if resistance is outside of tolerances or an open exists. Refer to Section 12.0 for tolerances.

C. Coil Tab Allowable Wear.

The coil tab is 0.018 in. ± 0.0005 in. nominal. The allowable wear is 0.001 in. per 100 hours time in service to a maximum of 0.01 in." wear with at least 0.008 in. remaining. If tab is worn beyond limits, replace the coil.

Example: The magneto has 200 hours time in service. The coil tab measures 0.0181 on either side of the wear area. The deepest wear point measures 0.0165 in. giving a wear of 0.0016 in. (i.e., 0.0181 in. - 0.0165 in. = 0.0016 in.), which is acceptable and allows the coil to be returned to service for another 500-hour interval.

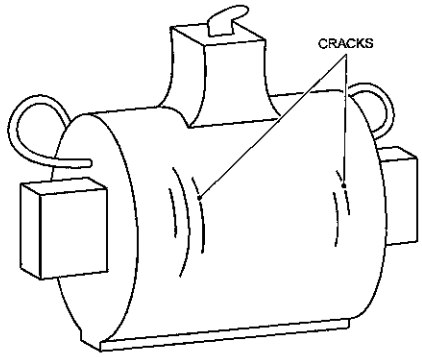

Figure 3.3.6

3.3.7 INSPECT CONTACT POINTS

A. Primary Contact Points (All Magnetos)

NOTE: DO NOT MANUALLY MANIPULATE THE POINT SPRING. THIS WILL CHANGE THE SPRING TENSION AND AFFECT THE LIFE OF THE PARTS AND INDIRECTLY AFFECT THE TIMING.

NOTE: IN A RETARD BREAKER MAGNETO, THE PRIMARY CONTACT POINTS ARE SECURED BY A **BLACK** ANODIZED SCREW.

RR contact point mag set 2 remove

1. Inspect the primary contact points for signs of pitting and discoloration. If the points are not discolored and have a white, frosty surface around the edges, points are functioning properly and can be reused.

RR

2. If the points are blue (indicating excessive arcing) or pitted, the points must be discarded. Replace the primary contact point assembly, condenser and cam.

NA B. Retard Breaker Contact Points (Retard Breaker Magnetos Only)

NOTE: IN A RETARD BREAKER MAGNETO, THE RETARD BREAKER CONTACT POINTS ARE SECURED BY A **SILVER** SCREW.

NA

1. Inspect the retard breaker contact points for signs of pitting and discoloration. If the points are not discolored and have a white, frosty surface around the edges, the points are functioning properly and can be reused.

2. If the points are blue (indicating excessive arcing) or pitted, the points must be discarded. Replace the retard breaker contact point assembly and cam.

C. Tachometer Drive Contact Points (Tachometer Drive Magnetos Only)

NA

1. Inspect the tachometer drive contact points for signs of pitting and discoloration. If the points are not discolored and have a white, frosty surface around the edges, the points are functioning properly and can be reused.

2. If the points are blue (indicating excessive arcing) or pitted, the points must be discarded. Replace the tachometer drive contact point assembly and cam.

magneto 2

3.3.8 INSPECT CONDENSER

RR A. Clean Condenser

RR

1. If the external surfaces of the condenser are dirty, clean with light soapy water.

RR

2. Rinse the soapy water and dirt from condenser surfaces with clear water and pat dry before reinstallation into the magneto housing.

B. Condenser Inspection

RR RR

1. Inspect the condenser for signs of corrosion. This condition is cause for component rejection. (See Figure 3.3.8).

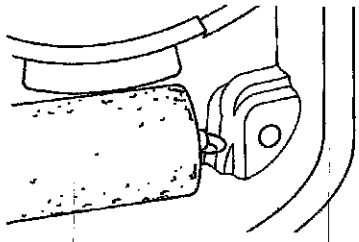

Figure 3.3.8

RR

2. Inspect the condenser wire for chafing, frayed insulation, or exposed wires that could contact frame. Replace as necessary.

RR

3. Inspect the condenser P-lead stud for twisting or "pulled" condition. Use a magnifying lens to examine the glass bead end seals of the capacitor for broken glass or for glass separation from the retaining steel rings. Either of these conditions is cause for component rejection. (See Figure 3.3.8A).

NOTE: THE CURRENT CONDENSER DESIGN UTILIZES A "D" SHAPED INSULATOR TO PREVENT DAMAGE FROM OVER-TORQUING OF THE P-LEAD STUD.

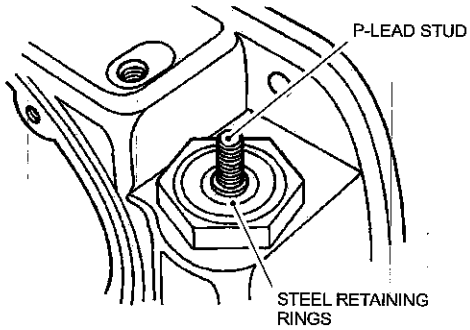

Figure 3.3.8A

WARNING: THE CAPACITOR MAY RETAIN A RESIDUAL CHARGE THAT COULD CAUSE A MINOR SHOCK TO THE INDIVIDUAL. DISCHARGE THE CAPACITOR PRIOR TO TESTING AND HANDLING.

C. Test Capacitor

RR Test the electrical properties of the capacitor using the equipment listed below, or equivalent test equipment.

1. The capacitance value must be measured at room temperature using a Fluke 87V. The service limit of the capacitor is .315 to .385 microfarad.

2. Test the insulation resistance of the capacitor using a MIT410-EN megger. The resistance measured between the capacitor stud and shell must be 10 Megohms minimum at 135 ± 5 VDC or 20 Megaohms minimum at 250 ± 5 VDC.

NOTE: NO FIELD REPAIRS OF THE CONDENSER ARE APPROVED. UNDER NO CIRCUMSTANCES IS THE CONDENSER LEAD TO BE RESOLDERED TO THE CONDENSER STUD IF IT BECOMES DETACHED. SOLDERING THIS LEAD CAN RESULT IN ELECTRICAL BREAKDOWN INSIDE THE CAPACITOR AND/OR LOSS OF HERMETIC SEAL INTEGRITY.

D. Install Condenser

Install the condenser following the instructions in Section 7.12 of this manual.

3.3.9 INSPECT DISTRIBUTOR BLOCK ASSEMBLY

A. Clean the block assembly

1. Disassemble and clean the distributor block bearing bar using a standard non-filming, nonconductive cleaner. Clean the distributor gear with soapy water and rinse with clear water.

CAUTION: DO NOT PUT CLEANER IN EITHER BRONZE OILITE BUSHING. THESE BUSHINGS ARE IMPREGNATED AT THE FACTORY AND CLEANER WILL DRAW THE LUBRICANT OUT OF THE BUSHING.

2. Use a cotton swab to clean all surfaces free of dirt oil, carbon dust and other contaminants.

B. Inspect the Distributor Block

1. Inspect the block for cracks or other physical damage. Replace the block assembly as necessary.

2. Inspect the brass electrode posts for signs of physical wear. Replace the block assembly as necessary. During normal operation, the post will experience an electrical-metal transfer with the distributor gear electrode. This condition is normal and not cause for rejection. (See Figure 3.3.9).

3. Inspect the bearing inside diameter. The bearing ID must be 0.246 in. + 0.002/-0.001 in.

1 = 0.247
2 = 0.246

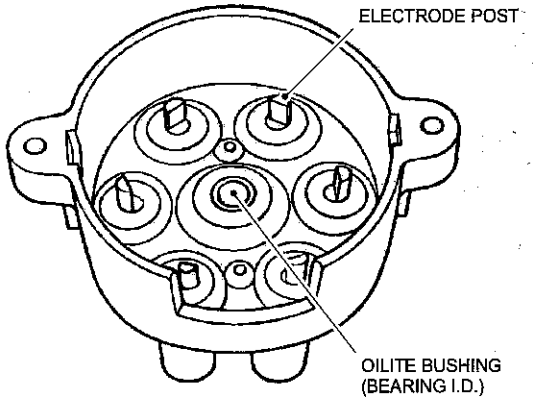

Figure 3.3.9

4. Inspect the oilite bushing for gumming oil condition. The bushing must be free of contamination and the gear must turn freely in the distributor block with no appreciable drag. If the bushing is gummed, replace the distributor block.

5. Make sure the distributor block surfaces are free of all oil and carbon dust prior to reassembly.

C. Inspect the Distributor Gear

1. Inspect the gear teeth for wear and general integrity. Replace the block assembly as necessary.

2. Inspect the electrode finger for looseness. The electrode must be held securely to the shaft when tested with light finger pressure. A loose condition requires gear replacement. (See Figure 3.3.9A).

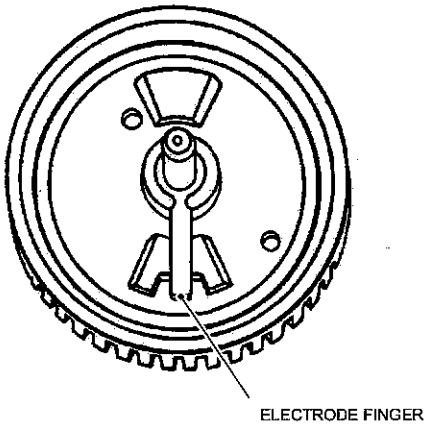

Figure 3.3.9A

3. Clean the end of the electrode to remove any electrical deposits.

4. Inspect the rotor shaft outside diameter. the shaft OD must be 0.2420 in. + 0.0003/-0.0001 in.

D. Inspect the Bearing Bar

1. The bearing bar ID must be 0.246 in. + 0.002/-0.001 in.

2. Inspect for cracks or other physical damage. Replace the assembly as necessary.

3. Make sure the bearing bar is free of all oil (other than that described in paragraph 3 below) and carbon dust prior to reassembly.

E. Lubrication

1. Reoil the bearing bar and the distributor block bearing as follows:

a. Wipe the bearing ID clean of any gummy residue.

b. For bearing bars, install the rubber cork in the open-end of the bearing on the side opposite the coil tab dielectric skirt. The cork is to be shaped to cover no more than 1/16 in. depth of the bearing ID. (Not required for closed end Distributor Block bearing).

c. Fill the open end of the bearing with Oillite bearing oil Slick P/N R5008, 32 oz.

d. Bake the oil filled part in oven for 2-3 hours at 200° F + 20° F/-10°F.

e. Remove from oven and allow to cool to room temperature before removing cork and decanting the remaining lubricant from ID of bearing.

f. Clean any excess oil from the dielectric surfaces of the block or bar.

g. Store the oiled parts in clean containers with non-absorbent packing.

3.3.10 INSPECT CARBON BRUSH

A. Inspect the carbon brush. The overall length of the carbon brush must be greater than 19/64 in. and the OD of the brush diameter must be uniform. (See Figure 3.3.10). Carbon brushes that do not meet these limits must be replaced. Reference Section 7.13 of this manual.

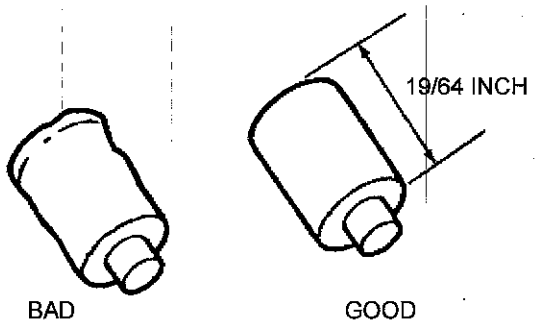

Figure 3.3.10

B Inspect the loading spring. The overall free standing length must be greater than 19/32 in. (See Figure 3.3.10A). Look for flat spots on the spring windings. The springs that appear worn or do not meet the overall length requirements must be replaced. Reference Section 7.13 of this manual.

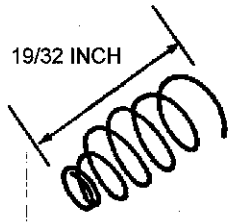

Figure 3.3.10A

C. Reinstall spring following Section 7.13B.

3.3.11 INSPECT FOR STRUCTURAL DAMAGE

Check the magneto frame and distributor housing for cracks or other damage. Inspect the threaded areas to make sure threads are intact and are not damaged. Replace as necessary, following the instructions in the Assembly Section of this manual. Complete the magneto reassembly, Section 7.

3.4 ADDITIONAL 250 & 500-HOUR INSPECTION PROCEDURES FOR PRESSURIZED MAGNETOS

3.4.1 INLET NOZZLE

Inspect and clean the inlet nozzle to make sure it is clean and free of obstruction. (See Figure 3.4.1). Yellow or white particles or an oily film in the inlet nozzle indicates moisture contamination and possible lack of pressurization. Reference the engine and/ or airframe manufacturer's literature for pressurization system corrective action.

CHART 2702. TROUBLESHOOTING AILERON CONTROL SYSTEM (continued)

Trouble	Cause	Remedy
Control wheels not synchronized.	Incorrect control column rigging.	Rerig control column.
Control wheels not horizontal when ailerons are neutral.	Incorrect rigging of aileron system.	Rerig aileron system.
Incorrect aileron travel.	Aileron control rods not adjusted properly. Aileron bellcrank stops not adjusted properly.	Adjust control rods. Adjust bellcrank stops.
Correct aileron travel cannot be obtained by adjusting bellcrank stops.	Incorrect rigging of aileron cables, control wheel and control rod.	Rerig controls.
Control wheel stops before control surfaces reach full travel.	Incorrect rigging between control wheel and control cables.	Rerig controls.

B, CONTROL COLUMN

1. **Removal Of Control Column Assembly** (Refer to Figure 27-6.)

   a. Remove either control wheel with tube as follows:
      (1) Separate control wheel tube from flexible joint located on either side of tee bar assembly, by removing nut, washer, and bolt. Pull tube from flexible joint.
      (2) To remove left control tube, slide the stop from tube.
      (3) Disconnect autopilot systems wiring in control tube at the quick disconnect terminals behind instrument panel. Draw wires back into the tube and out the tube forward end.
      (4) Remove control wheel assembly from instrument panel.

   b. Remove tee bar assembly as follows:
      (1) Remove access panel or door to aft section of fuselage.
      (2) Relieve cable tension from stabilator control cables at one of the stabilator cable turnbuckles in the aft section of fuselage.
      (3) Relieve tension from aileron control cables and chains, and at the turnbuckle connecting chains to tee bar top.
      (4) Disconnect control chains from control cables, where the chains and cables join, by removing the cotter pins, nuts, bolts, and bushings.

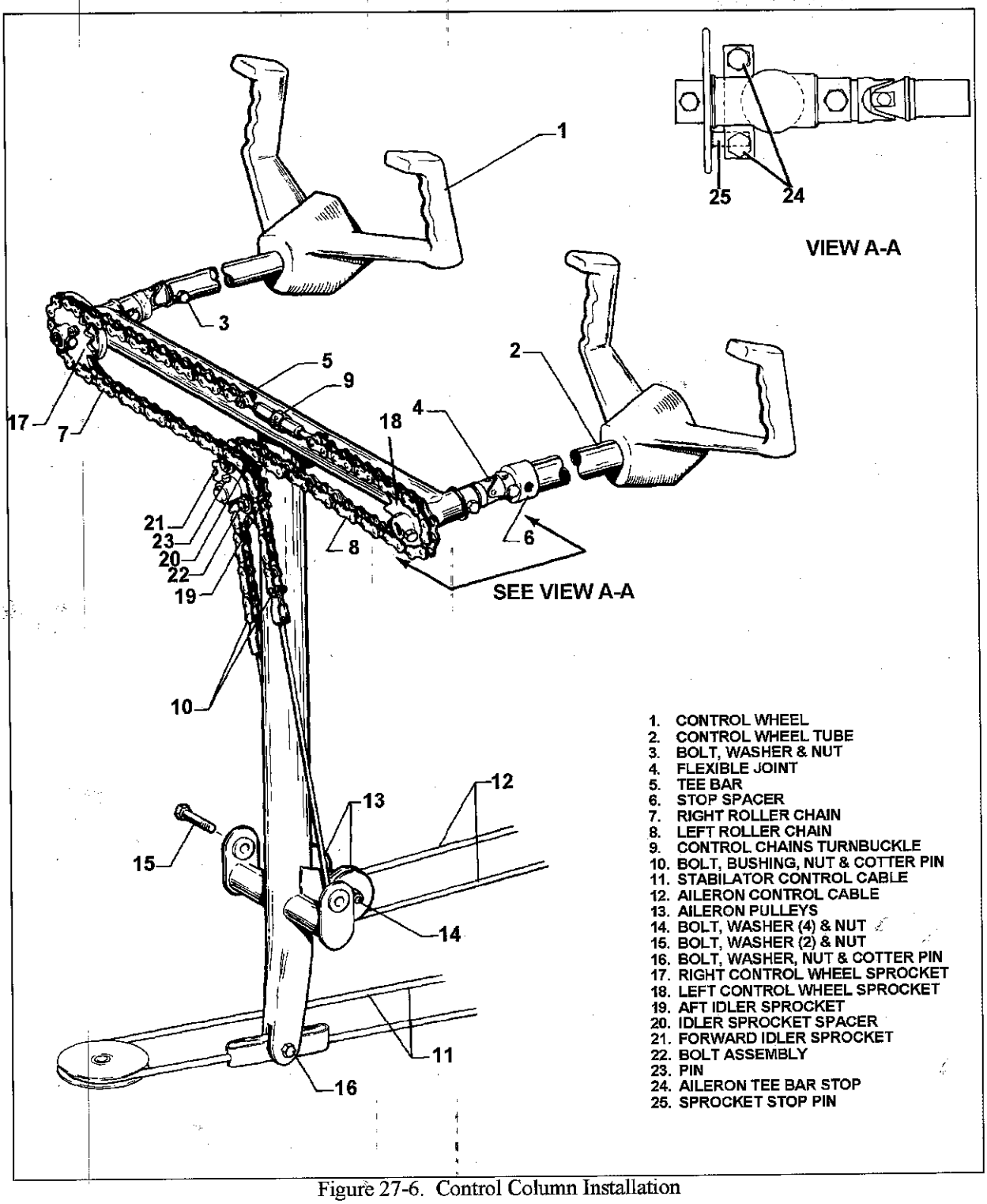

Figure 27-6. Control Column Installation

(5) Remove tunnel cover as follows:
(a) Remove rudder trim control knob and trim cover attaching screws.
(b) Roll back carpet from tunnel and remove tunnel plate located aft of tee bar assembly, by removing plate attaching screws.
(6) Remove the two aileron control cable pulleys attached to lower section of tee bar by removing pulley attaching bolt.
(7) Disconnect stabilator controls from lower end of tee bar assembly.
N/A (8) ~~Disconnect the mixture control, throttle control, etc.,~~ to allow tee bar assembly removal.
(9) Remove tee bar assembly by removing attaching bolts with washers and nuts (through each side of floor tunnel) and lift it up and out through right side of cabin.

3. **Installation Of Control Column Assembly** (Refer to Figure 27-6.)

a. Install tee bar assembly as follows:
(1) Swing tee bar assembly into place from right side of cabin and secure with attaching bolts, washers, and nuts inserted through each side of floor tunnel.
(2) Connect stabilator controls to lower end of tee bar with bolt, washer, nut, and cotter pin. Cable ends must be free to rotate.
(3) Place aileron control cables around pulleys that attach to the lower section of tee bar. Position pulleys and secure with bolt, washers, and nut.
(4) Install control wheel per step 2b.
(5) Place control wheels in neutral (centered) position and install aileron control chains on control wheel sprockets and idler crossover sprockets. This turnbuckle must be centered between the two control wheel sprockets.
(6) Loosen connecting bolts of idler sprockets to allow snug fit of chain around control wheel sprockets and over idler sprockets.
(7) Connect aileron control cables to chain ends with bolts, bushings, nuts, and cotter pins.
(8) Adjust chain turnbuckle between the two control wheel sprockets to allow control wheels to be neutral and obtain proper cable tension. To have both control wheels neutral, set chain turnbuckle to neutralize wheels and set cable tension with turnbuckles (under floor panel aft of main spar) per rigging and adjustment of aileron controls. Before safetying turnbuckle, verify when ailerons are neutral, the control wheels are neutral, and chain turnbuckle centered. Aileron bellcranks must contact their stops before control wheel hits its stop. Maintain 0.030 to 0.040 inch clearance between sprocket pin and adjustable stop bolts on models with adjustable aileron tee bar stops.
(9) Set stabilator cable tension with turnbuckle in the aft section of fuselage per instructions in rigging and adjustment of stabilator controls. Complete adjustments and check safety of all turnbuckles.
(10) Tighten connecting bolts of the idler sprockets.
(11) Install floor tunnel plate trim covers as follows:
(a) Position tunnel plate and install and secure with proper screws.
(b) Roll carpet into place and install rudder trim cover and knob with a clevis pin and cotter pin.
(c) Replace fuel selector and rudder trim knob.

b. Install either control wheel assembly as follows:
   (1) Insert control wheel tube through instrument panel.
   (2) Install autopilot systems wiring in the control tube and route the wires through hole in the forward side of tube and out the small hole in forward side. Position rudder grommet in the hole in the side of tube.
   (3) Install stop on left control tube.
   (4) Connect control wheel tube to the flexible joint of tee bar assembly. If the control cables or chains have not been removed or loosened, place ailerons in neutral and install control tube on the flexible joint to allow control wheel to be neutral. Install and tighten bolt, washer, and nut.

c. To Install Flex Joint Replacement (Refer to Figures 27-6 and 27-7)
   (1) Carefully lay out location for hole to be drilled in flex joint tube to match hole in control column shaft.
   (2) Using a #5 (0.2055) drill bit, drill hole through flex joint tube at location determined in paragraph (1).
   (3) Ream drilled hole, in steps, with a #1 reamer, checking to insure proper depth for taper pin and sufficient pin thread protrusion for proper installation.

– NOTE –

Reamer may be purchased from Enstice Tool Co., Palm Bay, Florida.

   (4) Install pin through tube and shaft.
      (a) If pin shoulder does ***not*** protruded past tube surface, install a AN960-10 washer
      (b) If pin shoulder ***does*** protruded past tube surface, install a MS20364-1032C washer
   (5) Install nut. Torque 35 - 40 inch-pounds.

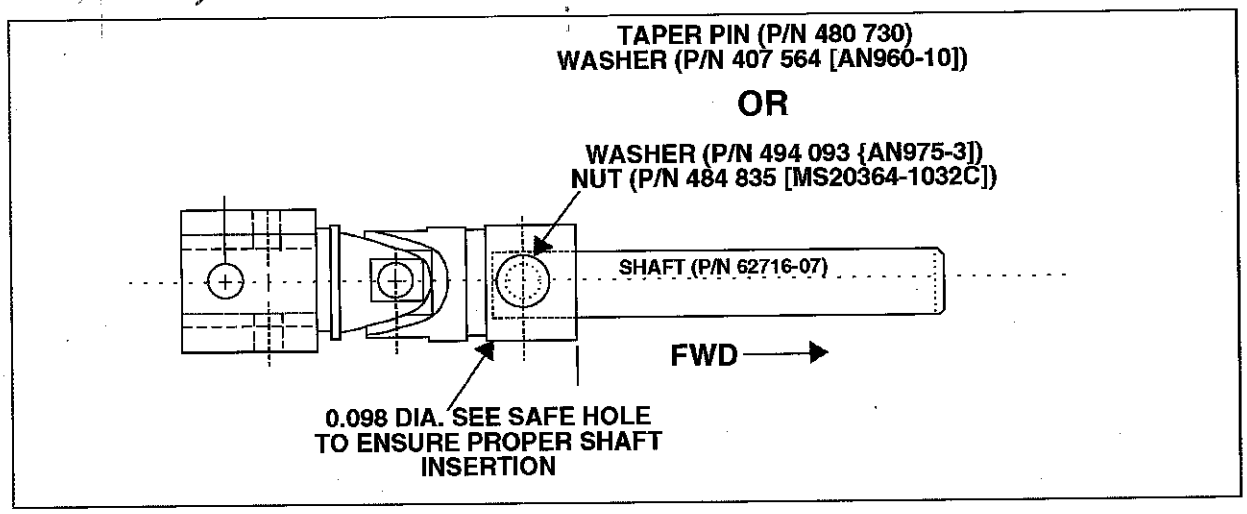

Figure 27-7. Flex (Universal) Joint Assembly)

C. AILERON CONTROL CABLES

1. Removal Of Aileron Control Cables (Refer to Figure 27-8.)

SR a. Remove rear seat and floor panel to access control cables in fuselage or wings.

SR b. Remove right or left primary control cables in the fuselage as follows:

SR (1) Remove the two front seats.

SR (2) Remove tunnel cover located aft of tee bar assembly as follows:

SR (a) Remove rudder trim control knob and trim cover attaching screws.

SR (b) Roll back carpet from tunnel and remove tunnel plate, located aft of tee bar assembly, by removing the plate attaching screws.

— NOTE —

To aid in control cables installation mark the cable ends and attach a line before drawing them through fuselage or wing.

SR (3) Separate primary control cable at the turnbuckle under rear seat or floor panel aft of main spar.

SR (4) Remove cable pulleys attached to lower section of control column tee bar assembly by removing pulley attaching bolt.

SR (5) Move cable guard under pulley cluster located just aft of lower portion of tee bar by removing cotter pin from exposed end of guard. Slide guard left or right as required.

SR (6) Remove cotter pins (used as cable guards) at the pulley in forward area of floor opening aft of main spar.

SR (7) Disconnect cable from control chain at control column tee bar assembly by removing cotter pin, nut, bolt, and bushing that connect the two. Secure chains to prevent un- wrapping from around sprockets.

N/A ~~(8) Pull cable back through floor tunnel.~~

c. Remove primary control cable from either wing as follows:

(1) Remove access plate to aileron bellcrank on the underside of wing forward of the inboard end of aileron.

(2) Separate cable at the turnbuckle located aft of the main spar.

(3) Remove cotter pin, nut, washer, and bolt to disconnect cable from forward end of aileron bellcrank.

(4) Pull cable from wing.

d. Remove either balance cable as follows:

(1) Separate balance cable at turnbuckle in right side of the opening aft of main spar.

(2) If the left balance cable is to be removed, remove cotter pin used as a cable guard at the pulley in the center of the opening.

(3) Remove access plate to aileron bellcrank on the underside of wing forward of the inboard end of aileron.

(4) Remove cotter pin, nut, washer, and bolt to disconnect cable from aft end of aileron bellcrank.

(5) Pull cable from wing.

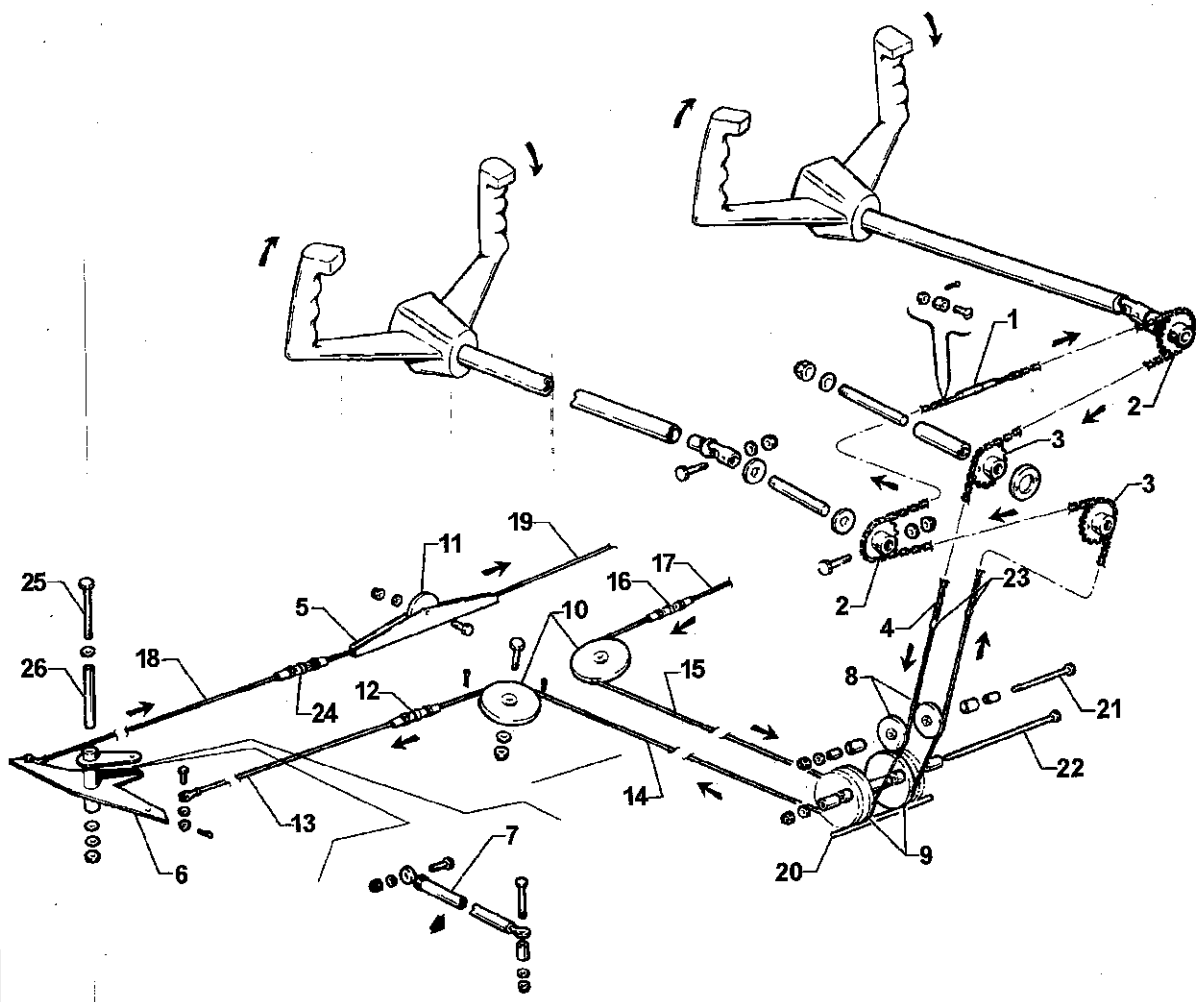

1. CONTROL CHAINS TURNBUCKLE
2. CONTROL WHEEL SPROCKET
3. IDLER SPROCKET
4. AILERON CONTROL CHAIN
5. PULLEY BRACKET
6. AILERON BELLCRANK
7. AILERON CONTROL ROD
8. TEE BAR PULLEY
9. FORWARD CLUSTER PULLEY
10. PRIMARY FORWARD CONTROL CABLE
11. BALANCE CABLE PULLEY
12. RIGHT PRIMARY TURNBUCKLE
13. RIGHT WING PRIMARY CABLE
14. RIGHT FUSELAGE PRIMARY CABLE
15. LEFT FUSELAGE PRIMARY CABLE
16. LEFT PRIMARY TURNBUCKLE
17. LEFT WING PRIMARY CABLE
18. RIGHT BALANCE CABLE
19. LEFT BALANCE CABLE
20. CABLE GUARD ROD
21. BOLT, WASHER & NUT
22. BOLT, WASHER & NUT
23. BOLT, NUT, BUSHING & COTTER PIN
24. BALANCE CABLE TURNBUCKLE
25. BELLCRANK PIVOT BOLT
26. BELLCRANK BUSHING

Figure 27-8. Aileron Controls (Typical)

2. **Installation Of Aileron Control Cables** (Refer to Figure 27-8.)

   a. Install right or left primary control cable in fuselage as follows:
      (1) Pull cable through fuselage floor tunnel.
      (2) Connect cable to end of control chain and secure, using bushing, bolt, nut, and cotter pin.
      (3) Place cable around pulley located in the tunnel aft of tee bar. Install cable guard and secure with cotter pin.
      (4) Position cables and install cable pulleys to lower section of tee bar assembly. Secure with bolt, washer, and nut.
      (5) Place cable around pulley in access opening just aft of main spar and install cotter pin cable guards.
      (6) If primary control cable in wing is installed, connect control cable ends at the turnbuckle in the access opening just aft of main spar.
      (7) Check rigging and adjustment per rigging and adjustment of aileron controls.
      (8) Install floor tunnel plate trim covers as follows:
         (a) Place tunnel plate into position and secure with attachment screws.
         (b) Roll carpet into place and install rudder trim cover and knob.

   b. Install primary control cable (either wing) as follows:
      (1) Insert control cable into wing.
      (2) Connect cable to forward end of aileron bellcrank, using bolt, washer, nut, and cotter pin. Allow cable end to rotate freely on bellcrank.
      (3) If primary control cable in fuselage is installed, connect the ends at turnbuckle under rear seat aft of main spar.
      (4) Check rigging and adjustment per rigging and adjustment of aileron controls.
      (5) Install access plate on wing underside.

   c. Install either balance cable as follows:
      (1) Insert cable into wing.
      (2) Connect cable to aft end of aileron bellcrank using a bolt, washer, nut, and cotter pin. Allow cable end to rotate freely on bellcrank.
      (3) Connect balance cable ends at the turnbuckle under rear seat aft of main spar.
      (4) If left cable was removed, install cotter pin cable guard at the pulley in fuselage aft of main spar.
      (5) Check rigging and adjustment per rigging and adjustment of aileron controls.
      (6) Install access plate on underside of wing.
      (7) Install floor panel, seat belt attachments, and seats.

D. AILERON BELLCRANK ASSEMBLY

1. **Removal Of Aileron Bellcrank Assembly** (Refer to Figure 27-8.)

   a. Remove rear seats and floor panel.
   b. Remove access plate to aileron bellcrank on underside of wing, forward of aileron inboard end.
   c. Relieve tension from aileron control cables by loosening balance cable turnbuckle in the opening aft of main spar.
   d. Disconnect primary and balance control cables from bellcrank assembly by removing cotter pins, nuts, washers, and bolts.

e. Disconnect aileron control rod by removing cotter pin,nut, washer, and bolt.
f. Remove nut (visible from wing underside), pivot bolt, and washers holding bellcrank.
g. Remove bellcrank from wing.

2.Installation Of Aileron Bellcrank Assembly (Refer to Figure 27-8.)

a. Check bellcrank pivot bushing is lubricated and install in the torque tube portion of bellcrank.
b. Place bellcrank in position with a washer located between each end of the torque tube and mounting brackets.
c. Install bellcrank pivot bolt with head up. Install washer and nut on bolt, and tighten nut to torque of 20 to 25 inch-pounds. Check bellcrank rotates freely with little up-down play.
d. Install and adjust control rod and check aileron travel per rigging and adjustment of aileron controls.
e. Connect ends of primary and balance control cables to bellcrank using bolts, washers, nuts, and cotter pins. Allow cable ends to rotate freely on bellcrank.
f. Tighten control cables at balance cable turnbuckle in the floor opening aft of main spar. Check cable tension per rigging and adjustment of aileron controls.
g. Install access plate on wing underside and replace floor panel, seat belt attachments, and seats.

E. RIGGING AND ADJUSTMENT OF AILERON CONTROLS (Refer to Figures 27-9 and 27-11.)

— CAUTION —

Complete all rigging corrections. If an out of trim condition persists, it is possible trailing edge of aileron was used to move aircraft forward. This will result in slight bulging of aileron contour at the trailing edge and will cause an out of rig condition.

— CAUTION —

Flap adjustment must be complete before starting aileron adjustment.

1. Check and adjust aileron controls rigging by first setting right and left aileron bellcranks at neutral position as follows: (Check control chains are rigged per installation of control column assembly.)
   a. Remove access plate to each aileron bellcrank on wing underside, forward of inboard end of aileron, by removing plate attaching screws.
   b. Set bellcrank rigging tool, per Figure 27-11, between forward arm of each bellcrank and the adjacent rib. Make tool from dimensions given in Figure 27-11. The slotted tool end fits on arm forward of and adjacent to primary control cable end. Position the other tool end so the side of tool contacts aft side of bellcrank stop. Bellcrank must be moved to allow a snug fit of tool between bellcrank arm and rib. If necessary loosen a primary control cable or balance cable. Neutral position of bellcranks is the position at which forward and aft cable connection holes are an equal distance from adjacent outboard wing rib.

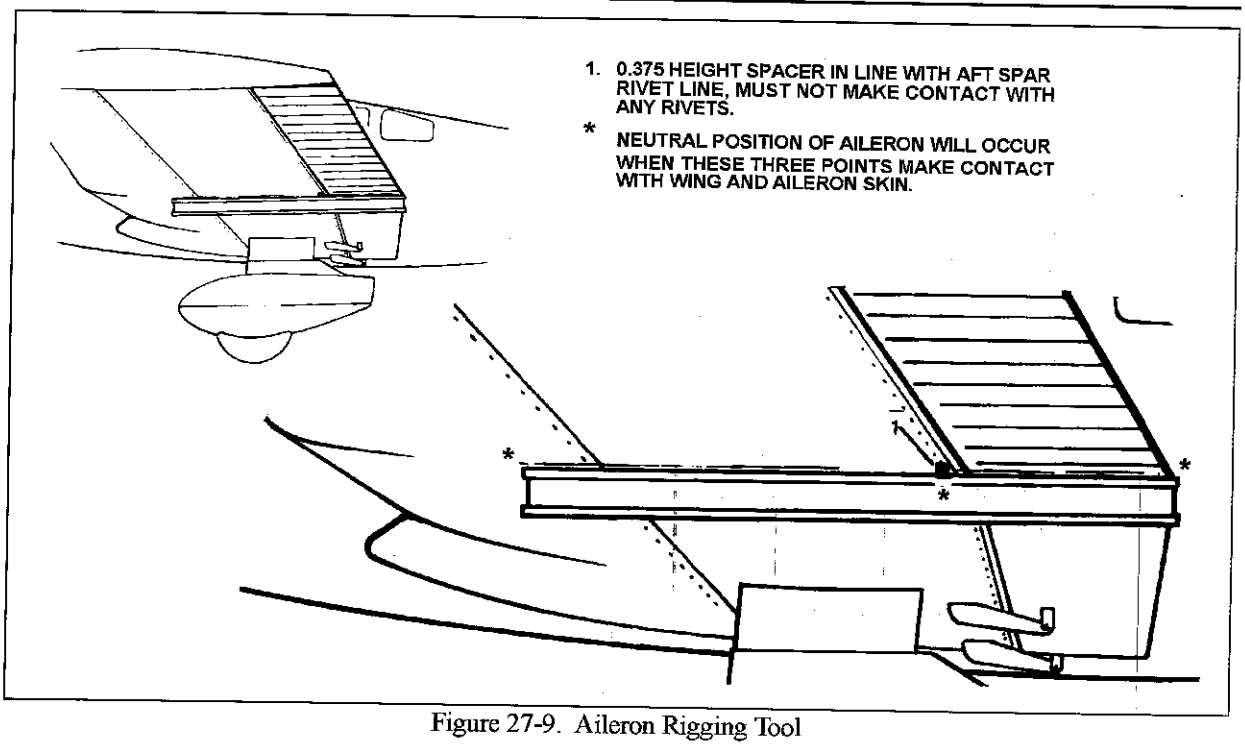

Figure 27-9. Aileron Rigging Tool

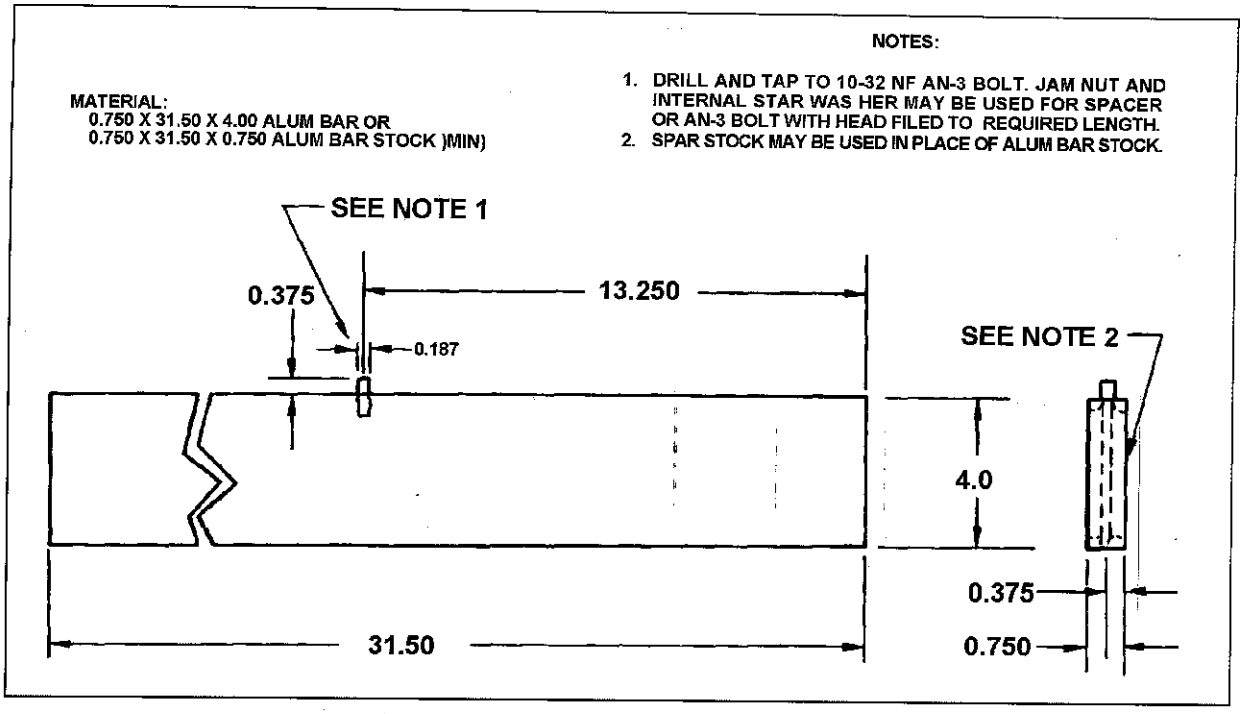

Figure 27-10. Fabricated Aileron Rigging Tool

2. Set each bellcrank at neutral, check and adjust ailerons for neutral as follows:
   a. Check bellcrank rigging tool fits snug between bellcrank and rib.
   b. Place aileron rigging tool per Figure 27-9 against wing underside. Place tool close to inboard end of aileron without contacting any rivets. Tool must be positioned parallel with wing ribs. The aft end of tool must be even with aileron trailing edge. Make tool from dimensions given in figure 27-10.
   c. With aileron control rod connected between bellcrank and aileron, check wing surface contacts tool at its forward surface and at the spacer. Check trailing edge of flap contacts aft end of tool. Aileron is neutral at this position.
   d. If the three points do not contact, loosen jam nut at aft end of control rod and rotate the rod until the three points contact. Apply slight up pressure against trailing edge of aileron while making adjustment. Tighten jam nut after adjustment.
3. Adjust primary and balance cable tension per Figure 27-12 as follows:
   a. Remove front and rear seats for better access.
   b. Loosen connecting bolts of idler crossover sprockets at the control tee bar to allow chain to fit snug around control wheel sprockets and over idler sprockets.
   c. Check bellcranks are at neutral position.
   d. Adjust turnbuckles (in access opening just aft of main spar) of the primary and balance cables to their proper cable tension. Maintain neutral center position of control wheels. Obtain neutral position of both control wheels, by adjusting roller chain turnbuckle between control wheel sprockets. During adjustment, use a little more tension on primary control cables to hold bellcranks in neutral against rigging tools. Finish with even tension on all cables.
   e. Tighten bolts to secure idler crossover sprockets.
   f. Remove aileron bellcrank rigging tool from each wing.
4. Check ailerons for correct travel from neutral per Figure 27-12 dimensions as follows:
   a. Center protractor bubble over aileron surface at neutral position. Note the reading.
   b. Move aileron full up and down, and check degree of travel for each direction. Figure degree of travel on protractor by the difference between the protractor reading at neutral and up, and neutral and down. Bubble must be centered each reading.
   c. If travel is not correct, set by rotating bellcrank stops in or out. Stops are in the wing, attached to rib adjacent to aileron bellcrank.
   d. Use this procedure for each aileron.
5. Check bellcrank stops to verify bellcrank contact is made simultaneously, and still has cushion before contacting control wheel stops. Maintain 0.030 to 0.040 inch clearance between sprocket pin and adjustable stop bolts on models with adjustable tee bar stops.
6. Check complete system for operation and safety of turnbuckles, bolts, etc.
7. Install access plates and panels.

THIS SPACE INTENTIONALLY LEFT BLANK

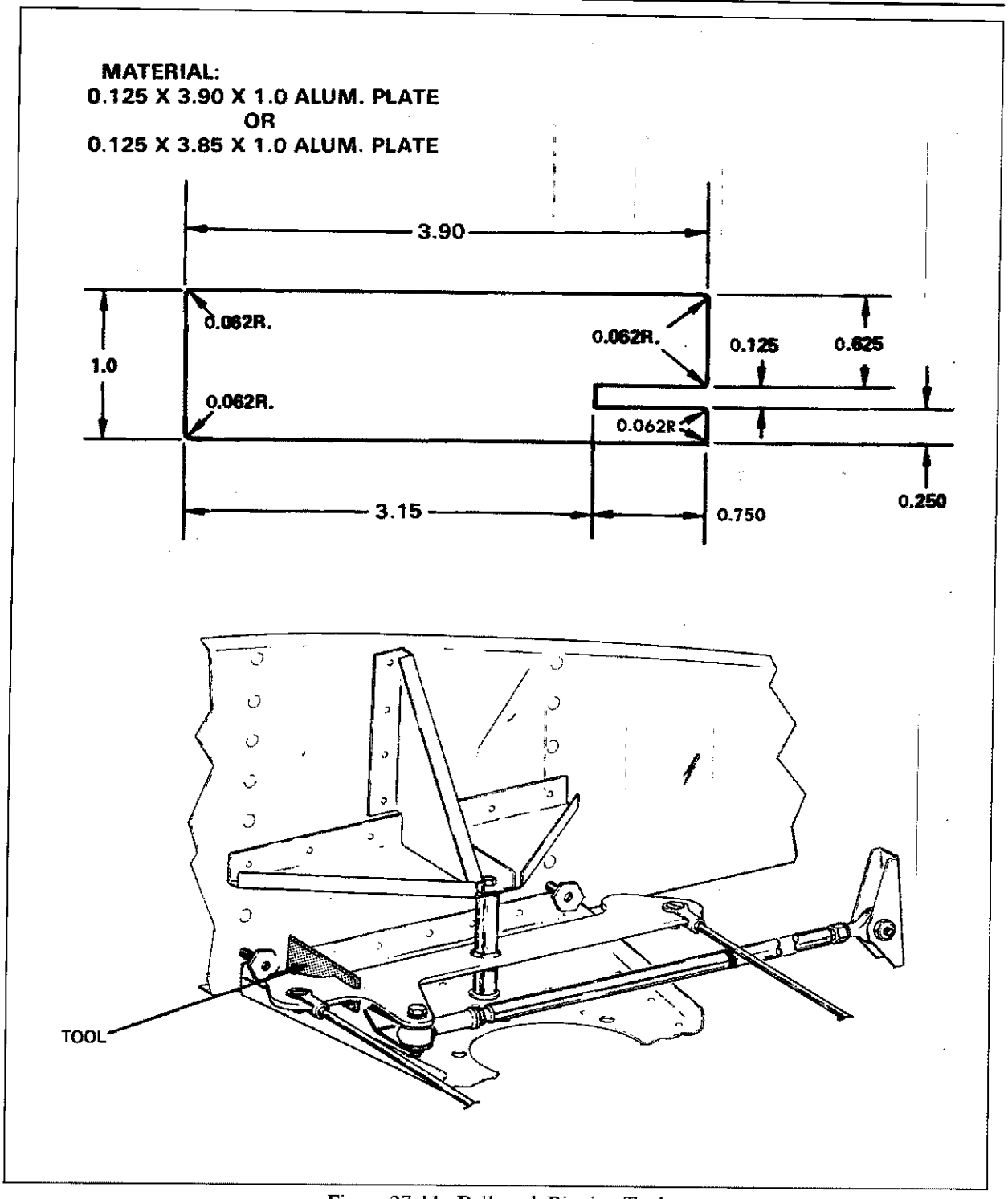

Figure 27-11. Bellcrank Rigging Tool

AILERON TRAVELS

A 25° ± 2° UP

B 12° .5 ± 2° DN

CABLE TENSION

40 LB ± 5 LB

(SEE NOTE 3)

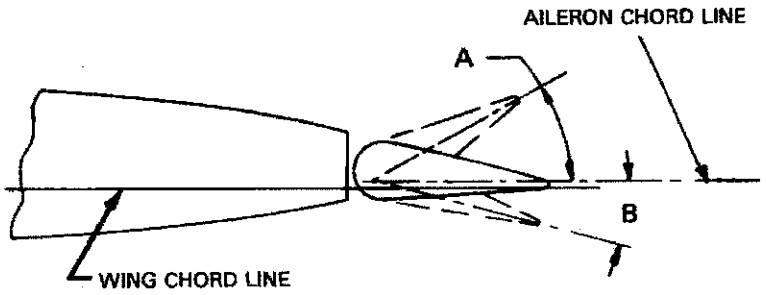

1. MAXIMUM FREE PLAY FOR AILERON IS 0.24 INCH, MEASURED AT TRAILING EDGE (UP/DOWN MOVEMENT).
2. MAXIMUM FREE PLAY SPANWISE IS 0.035 (INBOARD/OUTBOARD MOVEMENT).
3. CABLE TENSION APPLIES ONLY TO AIRPLANES WITHOUT AUTOPILOT BRIDLE CABLES ATTACHED. REFER TO APPROPRIATE AUTOPILOT SERVICE MANUAL FOR CALBE TENSION WHEN ATTACHING BRIDLE CABLES.

Figure 27-12. Aileron Rigging

— END —

THIS PAGE INTENTIONALLY LEFT BLANK

RUDDER CONTROLS

A. TROUBLESHOOTING

Chart 2703 lists troubles peculiar to rudder control system along with their probable causes and suggested remedies. When troubleshooting the rudder control system, additional reference may be obtained from Chapter 55 on control surface balancing, if required. After the trouble has been corrected, check the entire rudder control system for security and operation.

CHART 2703. TROUBLESHOOTING RUDDER CONTROL SYSTEM

Trouble	Cause	Remedy
Lost motion between rudder pedals and rudder.	Cable tension too low.	Adjust cable tension.
	Linkage loose or worn.	Check linkage and tighten or replace.
	Broken pulley.	Replace pulley.
	Bolts attaching rudder to bellcrank are loose.	Tighten bellcrank bolts.
Excessive resistance to rudder pedal movement.	System not lubricated properly.	Lubricate system.
	Rudder pedal torque tube bearing in need of lubrication.	Lubricate torque tube bearings.
	Cable tension too high.	Adjust cable tension.
	Pulleys binding or rubbing.	Replace binding pulleys and/or provide clearance between pulleys and brackets.
	Cables not in place on pulleys.	Install cables correctly. Check cable guards.
	Cables crossed or routed incorrectly.	Check routing of control cables.
Rudder pedals not neutral when rudder is streamlined.	Rudder cables incorrectly rigged.	Rerig rudder cables.
Incorrect rudder travel.	Rudder bellcrank stop incorrectly adjusted.	Rerig bellcrank stops.
	Nose wheel contacts stops before rudder.	Rerig nose wheel stops.

CHART 2704. TROUBLESHOOTING RUDDER TRIM CONTROL SYSTEM

Trouble	Cause	Remedy
Trim control knob moves with excessive resistance.	System not lubricated properly.	Lubricate system.

B.RUDDER AND STEERING PEDAL ASSEMBLY

1. **Removal Of Rudder and Steering Pedal Assembly** (Refer to Figure 27-13.)

   a. Remove access panel to the aft section of fuselage.
   b. Relieve rudder and stabilator cable tension by loosening one of the rudder and stabilator cable turnbuckles in aft section of fuselage.
   c. Remove tunnel plate aft of tee bar assembly by removing rudder trim control knob, trim cover attaching screws, and trim cover. Roll back carpet from tunnel and remove tunnel plate aft of tee bar assembly by removing plate attaching screws.
   d. Disconnect stabilator control cable from low end of tee bar assembly.
   e. Remove tee bar attaching bolts (with their washers and nuts) through each side of floor tunnel. Pull lower end of tee bar aft.
   f. Disconnect control cable ends from torque tube arms by removing cotter pins, washers, nuts and bolts.
   g. Disconnect rudder trim from torque tube assembly by removing cotter pin, washers, and the bolt connecting the arm to the trim. Remove cotter pin and clevis pin from rudder trim mechanism and remove mechanism from mounting channel. Remove engine control bracket assembly screw and swing it out of the way. Disconnect alternate air cable and move aside.
   h. Disconnect steering rods at the rudder by removing nuts and bolts.
   i. Disconnect brake cylinders (low end of each cylinder rod) by removing cotter pins, washers, nut, and bolts.
   j. Disconnect vee brace(s) (two braces are used with right hand brakes) from torque tube by removing nuts, washers, and bolts holding strap bracket to vee brace.
   k. Disconnect torque tube support bracket by removing two bolts attached to the box under bracket, and the four bolts attached to forward bulkhead.
   l. Remove two bolts that extend through torque tube at the center of tube assembly over floor tunnel. Compress tubes. Remove left and right toe brake pedal assembly.
   m. Disconnect torque tube support blocks from their support brackets on each side of fuselage by removing attaching nuts, washers, and bolts.
   n. Remove trim side panels.
   o. Rotate rudder pedal bar assembly toward cabin door far enough to pull right pedal bar out. Rotate remaining assembly left and remove assembly. (Note the spacers and washers on each end and between support blocks.)

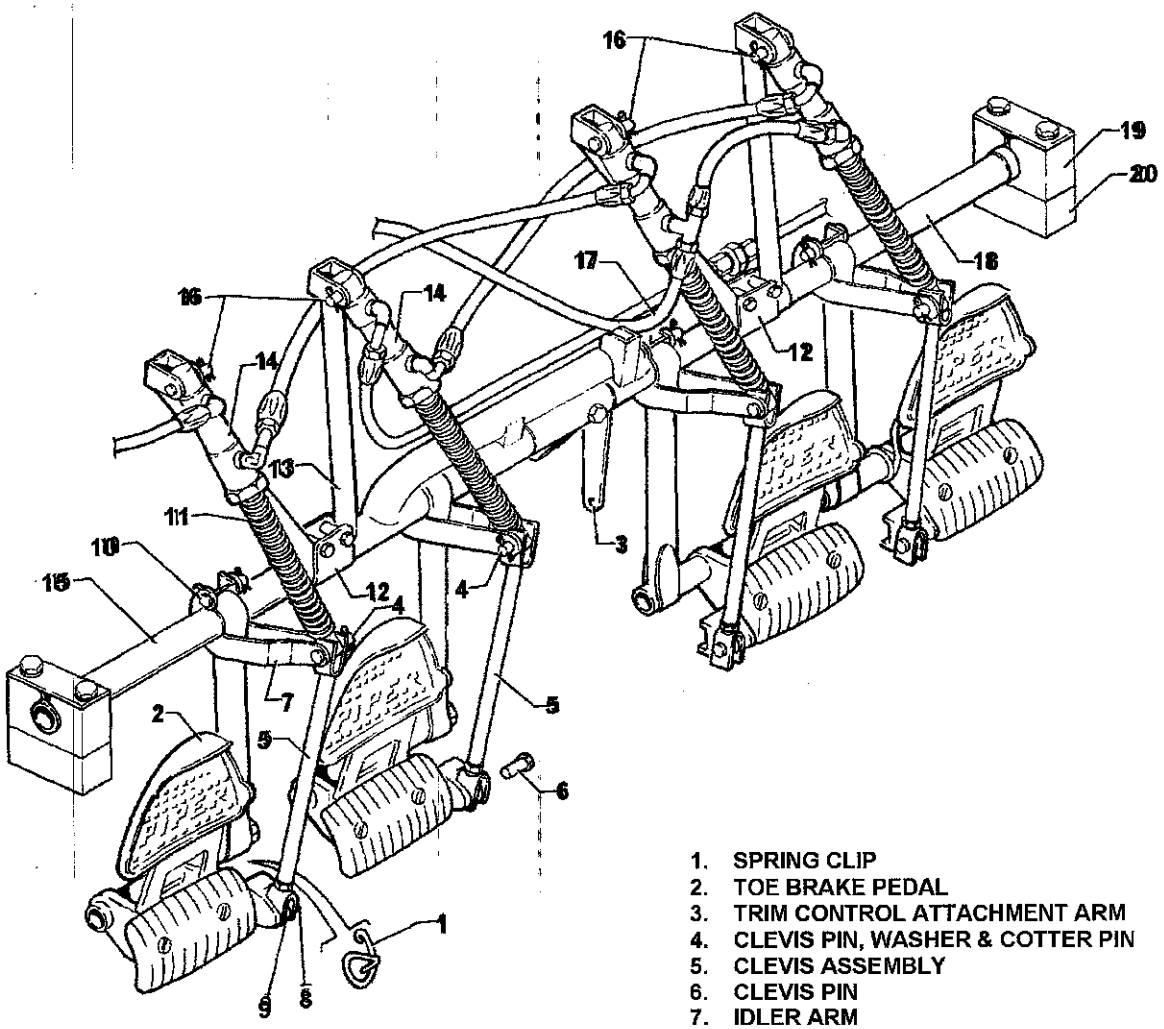

1. SPRING CLIP
2. TOE BRAKE PEDAL
3. TRIM CONTROL ATTACHMENT ARM
4. CLEVIS PIN, WASHER & COTTER PIN
5. CLEVIS ASSEMBLY
6. CLEVIS PIN
7. IDLER ARM
8. JAM NUT
9. CLEVIS PIN, WASHER & COTTER PIN
10. CLEVIS PIN, WASHER & COTTER PIN
11. RETURN SPRING
12. BRACKET
13. BRACE ASSEMBLY
14. HYDRAULIC CYLINDER ASSEMBLY
15. LEFT TUBE ASSEMBLY
16. CLEVIS PIN & COTTER PIN
17. FLEXIBLE HOSE ASSEMBLY
18. RIGHT TUBE ASSEMBLY
19. UPPER SUPPORT BLOCK
20. LOWER SUPPORT BLOCK

Figure 27-13. Rudder and Steering Pedal Assembly

2.Installation Of Rudder And Steering Pedal Assembly (Refer to Figure 27-13.)

a. Assemble torque tube assembly per Figure 27-13. Do not at this time install the two bolts through the center of tube assembly.
b. Place upper support blocks on the ends of torque tube assembly. A washer is required on each tube end.
c. Position support blocks on their mounting brackets each side of fuselage and secure with bolts, washers and nuts. A bushing is required in the upper support block bolt holes. A plate is required on top of upper block, between upper and lower blocks, and under block mounting bracket.
d. Align bolt holes in center area of torque tube assembly. Install and tighten bolts, washers, and nuts.
e. Position torque tube support bracket on floor tunnel and secure with bolts.
f. Position vee brace(s) on torque tube. Install strap bracket around torque tube and brace, and secure with bolts, washers, and nuts.
g. Connect the ends of the brake cylinder rods and clevis rods to the idler arms. Secure with clevis and cotter pins.
h. Connect steering rods to rudder pedals and secure with bolts and nuts. Check steering rod adjustment per alignment of nose gear, chapter 32.
i. Connect rudder trim to torque tube arm. Secure with bolt, washer, nut, and cotter pin. A thin washer is under the nut which is tightened only finger tight.
j. Connect rudder control cables ends to torque tube arms. Secure with bolts, washers, nuts, and cotter pins. Allow ends to rotate freely.
k. Swing tee bar into place, secure with attachment bolts, washers, and nuts. Insert bolts through each side of floor tunnel. (See Figure 27-6.)
l. Connect stabilator control cables to lower end of tee bar with bolt, washer, and nut. Secure with cotter pin. (See Figure 27-6.) Allow cable ends to rotate freely.
m. Set rudder cable tension and check rigging and adjustment per rigging and adjustment of rudder trim controls.
n. Set stabilator cable tension and check rigging and adjustment per rigging and adjustment of stabilator controls.
o. Check aileron cable tension.
p. Check safety of bolt and turnbuckles.
q. Install floor tunnel plate and secure with screws. Fasten tunnel carpet in place.
r. Install rudder trim cover and control knob.
s. Install access to aft section of fuselage.

C. RUDDER CONTROL CABLES

1. Removal Of Rudder Control Cables (Refer to Figure 27-14.)

a. Remove access panel to the aft section of fuselage to remove the forward or aft rudder cables.
b. Disconnect cable at the turnbuckle in aft section of fuselage.
c. Remove either forward rudder cable as follows
   (1) Remove rear seat, floor panel, and front seats.
   (2) Remove cable guard pin from underside of pulley cluster in the aft area of flap torque tube.
   (3) From within the area aft of the main spar, remove block attaching screws to remove cable rub blocks attached to spar housing.

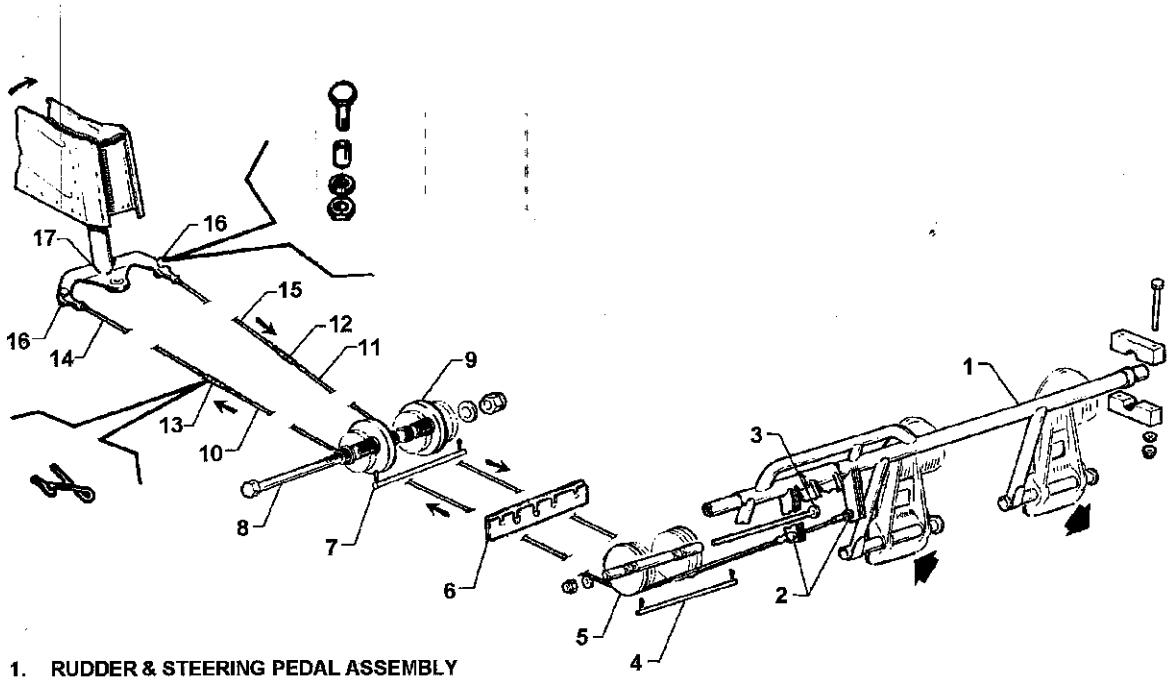

1. RUDDER & STEERING PEDAL ASSEMBLY
2. BOLT, WASHER, NUT & COTTER PIN
3. BOLT, BUSHINGS, WASHER, & NUT
4. CABLE GUARD PIN
5. PULLEY CLUSTER
6. RUB BLOCKS
7. CABLE GUARD PIN
8. BOLT, BUSHINGS, WASHER, & NUT
9. PULLEY CLUSTER
10. RIGHT FORWARD CABLE
11. LEFT FORWARD CABLE
12. LEFT TURNBUCKLE
13. RIGHT TURNBUCKLE
14. RIGHT AFT CABLE
15. LEFT AFT CABLE
16. BOLT, BUSHING, WASHER, & NUT
17. RUDDER HORN

Figure 27-14. Rudder Controls

(4) Remove rudder trim knob and cover attaching screws.
(5) Remove tunnel plate aft of tee bar by removing enough carpet from tunnel to allow plate attaching screws and plate to be removed.
(6) Remove cotter pin from the exposed end and slide it left or right to move cable guard pin, under pulley cluster aft of tee bar.
(7) Remove cotter pin, nut, washer, and bolt to disconnect the cable end from the arm on rudder pedal torque tube.
(8) Pull cable from floor tunnel.

d. Remove aft rudder control cables as follows:
(1) Remove tail cone fairing by removing attaching screws.
(2) Remove cotter pin, nut, washer, and bolt to disconnect cable from rudder horn.
(3) Pull cable through fuselage.

2. Installation Of Rudder Control Cables (Refer to Figure 27-14.)

a. Install *forward* rudder control cables as follows:
(1) Pull control cable through floor tunnel.
(2) Install bolt, washer, nut, and cotter pin to connect cable end to the arm on rudder pedal torque tube. (Allow cable end to rotate freely on the arm.)
(3) Connect cable to aft control cable at the turnbuckle in aft fuselage. If the aft control cables are not installed, install at this time per step b. Check each cable is in pulley groove.
(4) Move cable guard into position, in the forward area of tunnel, under pulley cluster and secure with cotter pin.
(5) Within the area aft of the main spar, install cable guard blocks onto spar housing and secure with screws.
(6) Install cable guard under pulley cluster aft of flap torque tube.
(7) Set cable tension and check rigging and adjustment per rigging and adjustment of rudder controls.
(8) Install forward tunnel plate aft of tee bar and secure with screws.
(9) Put floor carpet in place and secure.
(10)Install lower and upper selector covers and secure with screws.
(11)Install floor panel, rear seat, and front seats.

b. Install the aft rudder control cables as follows:
(1) Position control cable in fuselage.
(2) Connect cable end to rudder horn with bolt, washer, nut, and cotter pin. Allow cable end to rotate freely.
(3) Connect the other cable end to forward control cable at the turnbuckle in aft fuselage.
(4) Set cable tension and check rigging and adjustment per rigging and adjustment of rudder controls.
(5) Install tail cone fairing and secure with screws.

c. Install access panel to the aft section of fuselage.

D. RIGGING AND ADJUSTMENT OF RUDDER CONTROLS

1. Check and set correct degree of rudder travel, as follows:

— NOTE —

Raise nose wheel off of the ground when rigging the rudder. (Refer to chapter 7.)

a. Check rudder travel by swinging rudder until it contacts its stop. If control cables are connected, use rudder pedals to swing rudder.
b. With rudder against its stop, place rigging tool against the side of the rudder and vertical stabilizer as per Figure 27-15. (Make tool from dimensions given in Figure 27-18.) Check tool is not contacting rivets. If no gap exists between rigging tool and rudder surface, and vertical stabilizer, the rudder stop for one direction of travel is correct per Figure 27-17.
c. Swing rudder in the other direction and check travel as directed in step b. d.If rudder travel is incorrect (showing a gap between the tool and any part of the control surfaces), remove tail cone fairing and set stops to correct rudder travel. (Refer to Figure 27-19.)

2. Set cable tension and align rudder as follows:
   a. Remove access panel to the aft section of fuselage.
   b. Check nose gear steering is aligned and rudder pedals set fore and aft per alignment of nose landing gear, chapter 32.
   c. Clamp rudder pedals to align in lateral position per Figure 27-16.
   d. Adjust turnbuckles in aft section of fuselage for proper cable tension per Figure 27-19. Allow rudder to align at neutral position. (Determine neutral position by standing behind airplane and sighting rudder with the vertical stabilizer or stabilator trim screw center.)
   e. Check safety of turnbuckles and install all pulley guard pins.

— CAUTION —

Do not push rudder harder than necessary, to avoid cable stretch.

3. To adjust rudder pedal stops push pilot's left rudder pedal until rudder stop is contacted. Adjust pedal stop (on fire wall) to 0.060 to 0.120 inch clearance. Repeat procedure with copilot's right rudder pedal.
4. Install tail cone fairing and access panel to the aft section of fuselage.

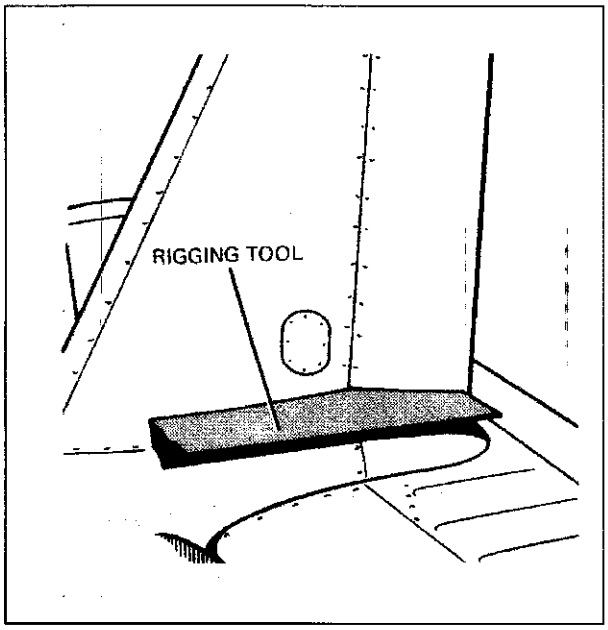

Figure 27-15. Rudder Rigging Tool

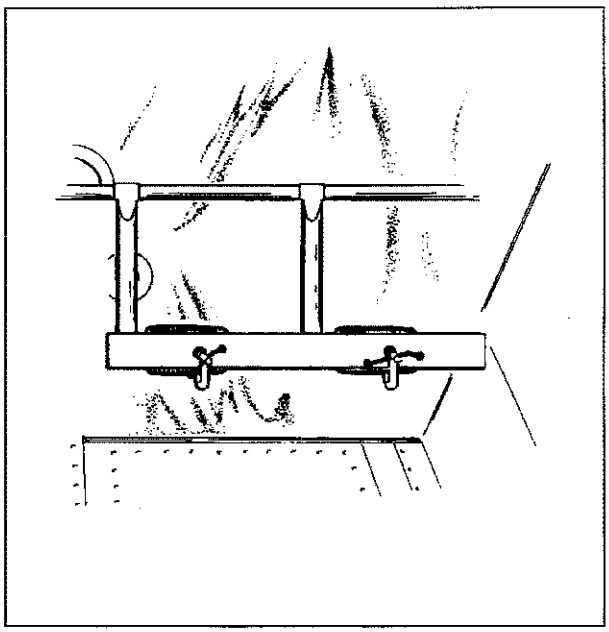

Figure 27-16. Clamping Rudder Pedals

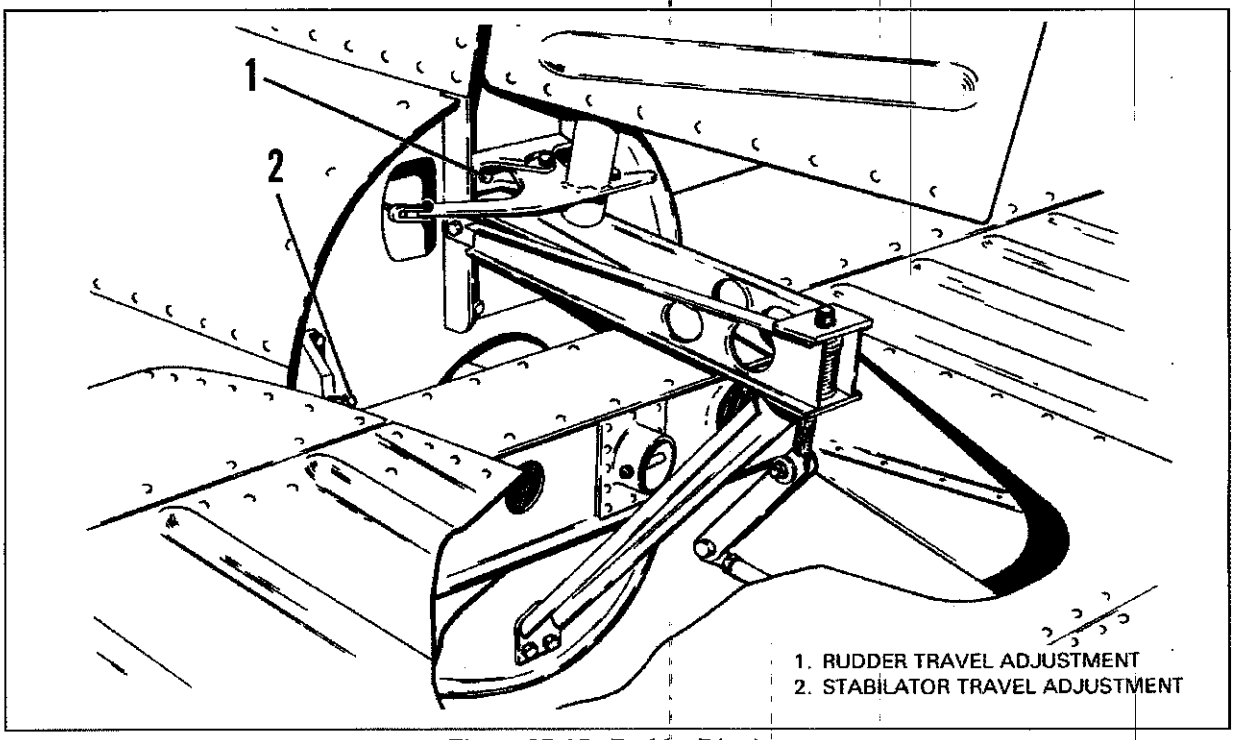

Figure 27-17. Rudder Rigging

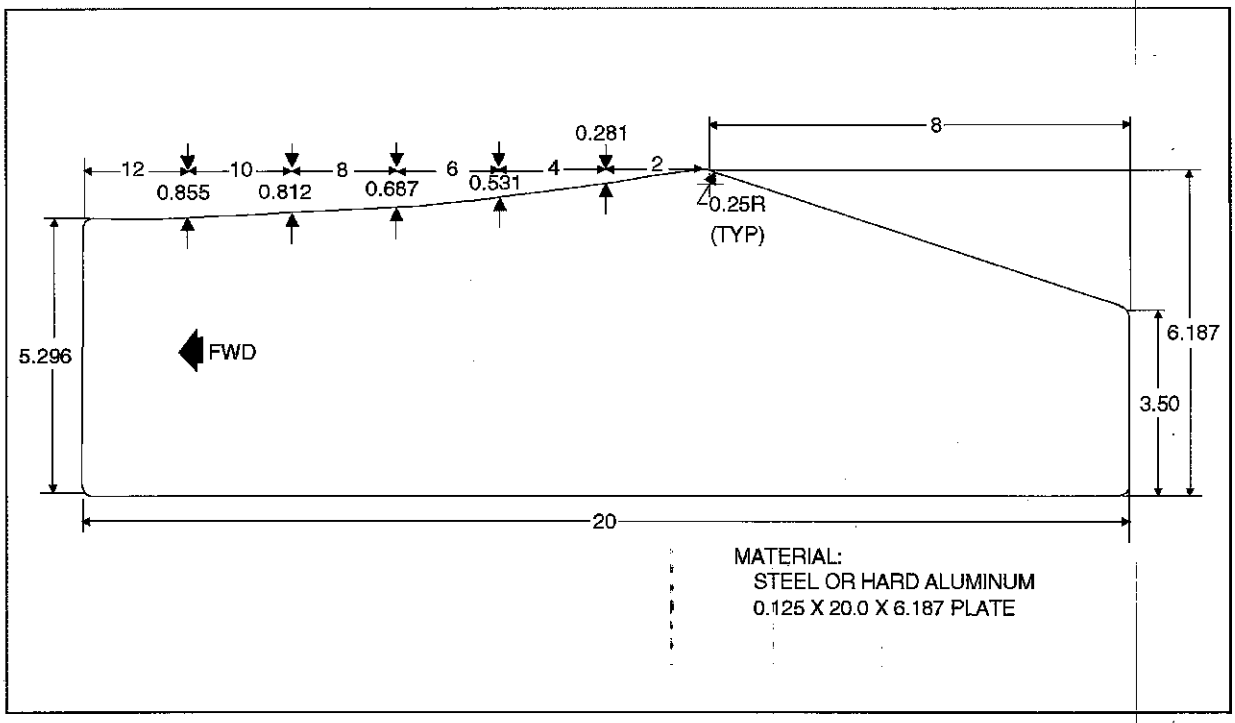

Figure 27-18. Fabricated Rudder Rigging Tool

RUDDER TRAVELS

A 27° ± 2° L

B 27° ± 2° R

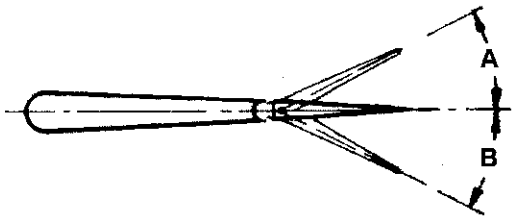

CABLE TENSION

35 LB ± 5 LB

(SEE NOTE)

NOTE

CABLE TENSION APPLIES ONLY TO AIRPLANES WITH OUT AUTOPILOT BRIDLE CABLES ATTACHED. REFER TO APROPRIATE AUTOPILOT SERVICE MANUAL FOR CABLE TENSION WHEN ATTACHING BRIDLE CABLE

Figure 27-19. Rudder Travel Adjustments

E. RUDDER TRIM CONTROLS

1. **Removal Of Rudder Trim Controls** (Refer to Figure 27-20.)

   a. Remove attaching screws to remove cover from trim control assembly.
   b. Remove the rudder trim knob and cover attaching screws.
   c. Rotate trim knob to the extreme left (counterclockwise) trim position.
   d. Remove cotter pin, nut, washer, and bolt to disconnect housing lug from arm on rudder pedal torque tube.
   e. Remove cotter pin and clevis pin to remove threaded bushing from the aft end of mounting channel. (Some mounting channels have two holes in the aft end; note from which hole the clevis pin was removed.)
   f. Remove channel attaching screws at the inside of the channel to remove mounting channel.

2. **Installation Of Rudder Trim Controls** (Refer to Figure 27-20.)

   Install rudder trim mechanism and set it at neutral (no load on spring) position. Perform the procedure only after all rudder and nose wheel rigging is complete.

   a. Install trim control mounting channel on upper side of floor tunnel. A spacer plate (some models) is between channel and tunnel. Install attaching screws secured with anchor nuts.
   b. Check clips are installed so safety wire is on top before attaching assembly to mounting channel. Check threaded bushing is on assembly shaft with the welded attachment bushing forward or toward housing.
   c. Attach housing lug to rudder pedal torque tube arm and secure with bolt, washer, and nut. Tighten nut finger tight and safety with cotter pin.

d. Clamp rudder pedals in neutral and position threaded bushing in mounting channel. Turn control shaft until holes in bushing and channel align, and install clevis pin and cotter pin. If two through holes are in aft end of mounting channel, pin must be installed through the hole that will give equal travel and hit rudder stops before bottoming out of trim assembly.

e. With the rudder pedals neutral and no pressure fore or aft on the clevis pin, install the assembly cover so indicator washer and neutral mark on cover align.

f. Install trim cover, secure with screws, and install trim control knob.

3. Rigging And Adjustment Of Rudder Trim Controls

Perform these procedures only after all rudder and nose wheel rigging is complete. No adjustments are necessary other than those required during installation of the assembly per installation of rudder trim controls.

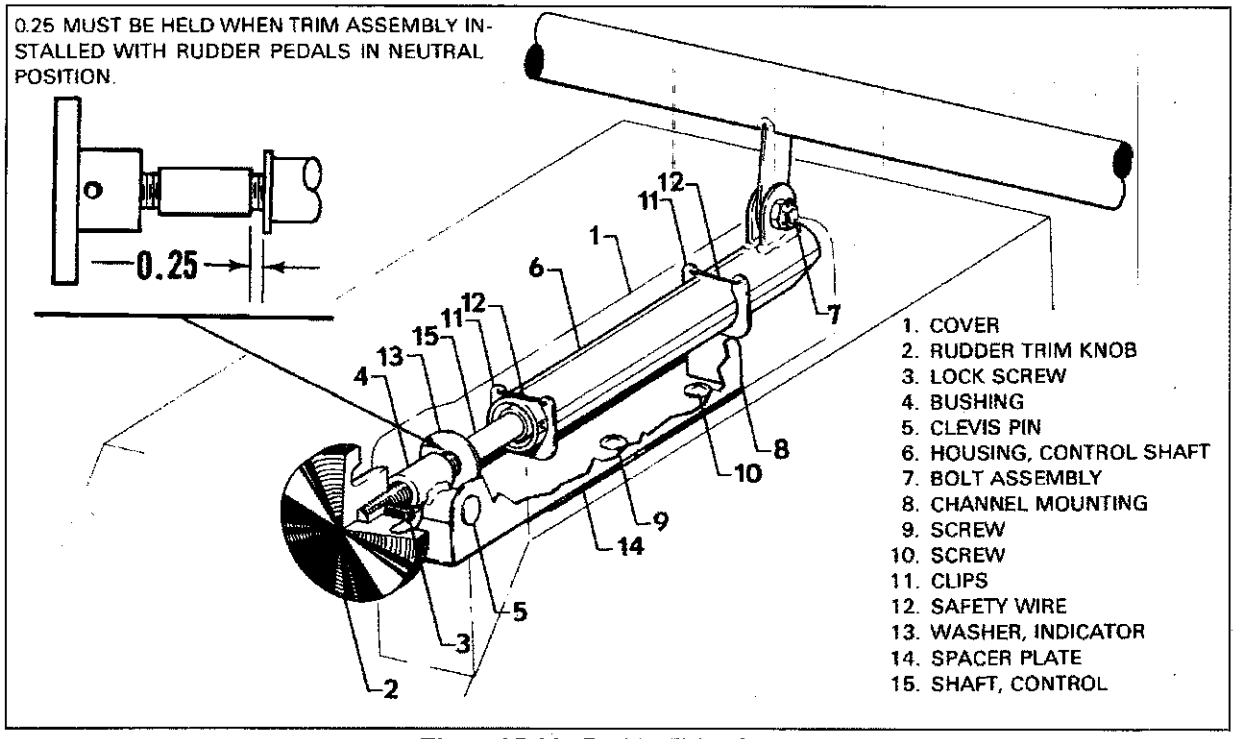

Figure 27-20. Rudder Trim Control

GRIDS 2C11 THROUGH 2C12
INTENTIONALLY LEFT BLANK

STABILATOR AND TAB

A- TROUBLESHOOTING

Charts 2704 and 2705 lists troubles peculiar to stabilator control system along with their probable causes and suggested remedies. When troubleshooting the stabilator control system, additional reference may be obtained on control surface balancing from Chapter 55. After the trouble has been corrected, check the entire rudder control system for security and operation.

CHART 2705. TROUBLESHOOTING STABILATOR CONTROL SYSTEM

Trouble	Cause	Remedy
Lost motion between control wheel and stabilator.	Cable tension too low.	Adjust cable tension.
	Linkage loose or worn.	Check linkage and tighten or replace.
	Broken pulley.	Replace pulley.
	Cables not in place on pulleys.	Install cables correctly.
Resistance to stabilator control movement.	System not lubricated properly.	Lubricate system.
	Cable tension too high.	Adjust cable tension.
	Binding control column.	Adjust and lubricate.
	Pulleys binding or rubbing.	Replace binding pulleys and/or provide clearance between pulleys and brackets.
	Cables not in place on pulleys.	Install cables correctly.
	Cables crossed or routed incorrectly.	Check routing of control cables.
	Bent stabilator hinge.	Repair or replace stabilator hinge.
Incorrect stabilator travel.	Stabilator stops incorrectly adjusted.	Adjust stop screws.
Correct stabilator travel cannot be obtained by adjusting stops position.	Stabilator cables incorrectly rigged.	Rerig stabilator cables.

CHART 2706. TROUBLESHOOTING STABILATOR MANUAL TRIM CONTROL

Trouble	Cause	Remedy
Lost motion between trim control wheel and trim tab.	Cable tension too low.	Adjust cable tension.
	Cables not in place on pulleys.	Install cables properly.
	Broken pulley.	Replace pulley.
	Linkage loose or worn.	Check linkage and tighten or replace.
Trim control wheel moves with excessive resistance.	System not lubricated properly.	Lubricate system.
	Cable tension too high.	Adjust cable tension.
	Pulleys binding or rubbing.	Replace binding pulleys. Provide clearance between pulleys and brackets.
	Cables not in place on pulleys.	Install cables properly.
	Trim tab hinge binding.	Lubricate hinge. If necessary, replace.
	Cables crossed or routed incorrectly.	Check routing of control cables.
Trim tab fails to reach full travel.	System incorrectly rigged.	Check and / or adjust rigging.
	Trim drum incorrectly wrapped .	Check and/or adjust rigging.
Trim indicator fails to indicate correct trim position.	Trim indicator unit not adjusted properly.	Adjust trim indicator.

B. STABILATOR CONTROL CABLES

1. Removal Of Stabilator Control Cables (Refer to Figure 27-21.)

a. Remove access panel to aft section of fuselage in baggage compartment, two front seats, rear seats, and floor panel.

b. Disconnect control cable at the turnbuckle in the aft section of fuselage.

c. Remove either forward stabilator cable as follows:

(1) Remove tunnel carpet and cover plate as follows:

Remove rudder trim control knob and trim cover attaching screws. Roll back carpet from tunnel and remove tunnel plate aft of tee bar assembly by removing the plate attaching screws.

(2) If the right (upper) stabilator control cable is to be removed, remove cotter pin guards at the pulley in the forward area of tunnel.

(3) To disconnect cables from low end of tee bar remove cotter pin, nut, washer, and bolt.

(4) In the access opening aft of main spar, remove cable rub blocks attached to spar housing by removing the block attaching screws.

(5) Remove cotter pin cable guard at pulley cluster in the access opening aft of main spar.

— NOTE —

Attach a line to cable end before removal to aid in control cable installation.

(6) Pull cable aft through floor tunnel.

d. Remove either aft stabilator control cable as follows:

(1) Remove cotter pin, nut, washer, and bolt and disconnect cable end at the stabilator balance arm.

(2) Remove cotter pin cable guard at the pulley either above or below balance arm.

(3) Remove cable from airplane.

2. **Installation Of Stabilator Control Cables** (Refer to Figure 27-21.)

a. Install forward stabilator cables as follows:

(1) Pull control cable through floor tunnel. Check right (upper) cable is routed around pulley(s) in the forward area of floor tunnel.

(2) Connect cables to low end of control column tee bar or idler arm with bolt, washer, nut, and cotter pin. Allow cable ends free to rotate.

(3) Install aft control cable per step b.

(4) Connect control cable to aft cable at the turnbuckle in aft section of fuselage.

(5) Set cable tension and check rigging and adjustment per rigging and adjustment of stabilator trim.

(6) For the right control cable, install the cotter pin cable guards at the pulley(s) in the forward area o the tunnel.

(7) Within the access opening at o main spar, install cable rub blocks to spar housing and secure with screws.

(8) Install cotter pin cable guard at the pulley cluster in the access opening.

(9) Install floor tunnel plate and trim covers as follows:

(a) Place tunnel plate into position and secure with attaching screws.

(b) Roll carpet into place and install rudder trim cover and knob.

(10) Install front seats, rear seat, and floor panel.

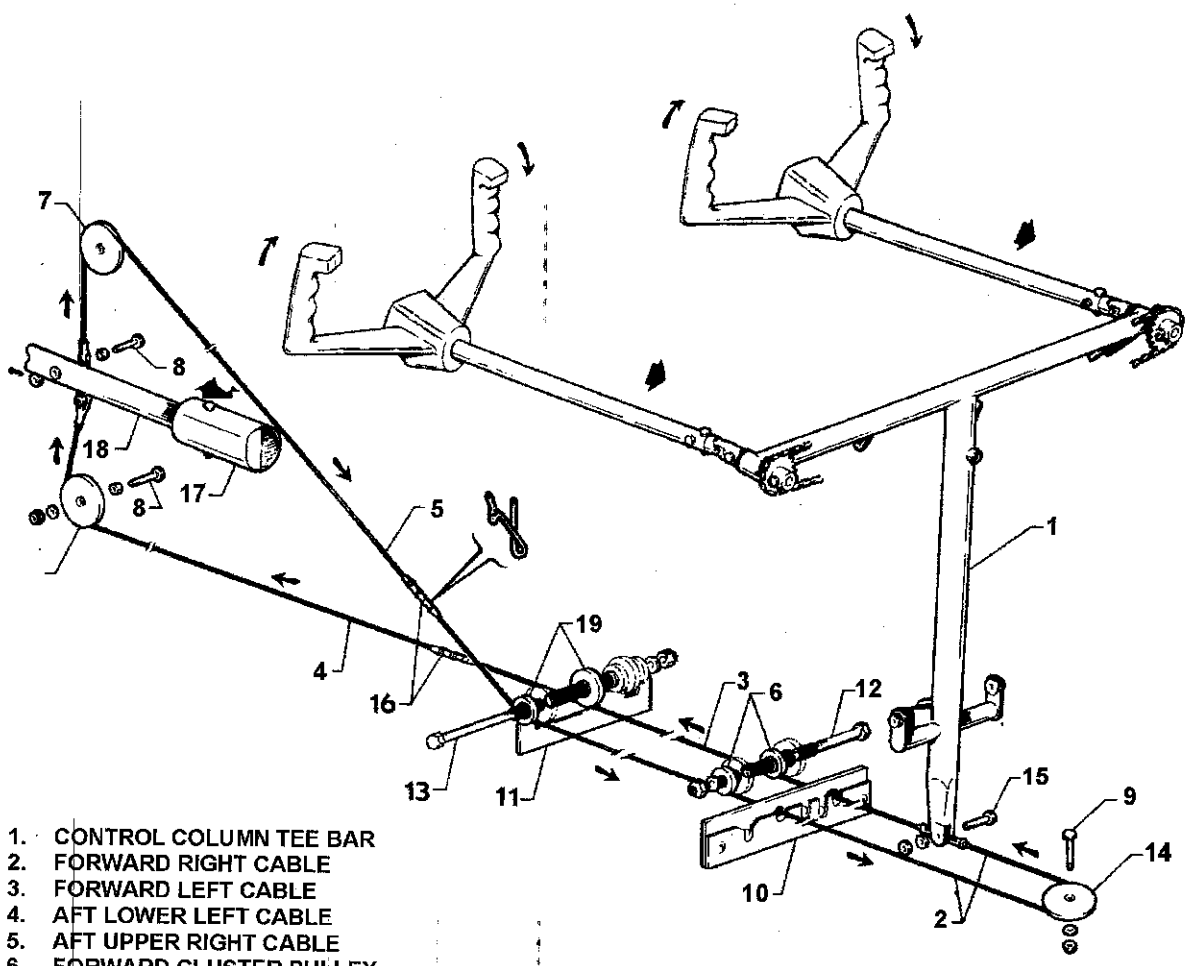

1. CONTROL COLUMN TEE BAR
2. FORWARD RIGHT CABLE
3. FORWARD LEFT CABLE
4. AFT LOWER LEFT CABLE
5. AFT UPPER RIGHT CABLE
6. FORWARD CLUSTER PULLEY
7. AFT PULLEY
8. BOLT, WASHER, NUT & COTTER PIN
9. BOLT, WASHER & NUT
10. CABLE RUB BLOCK
11. CABLE GUARD
12. BOLT, WASHER (7) & NUT
13. BOLT, WASHER (11) & NUT
14. FORWARD PULLEY
15. BOLT, WASHER, NUT & COTTER PIN
16. TURNBUCKLE
17. BALANCE ARM WEIGHT
18. STABILATOR BALANCE ARM
19. PULLEYS

Figure 27-21. Stabilator Controls

b. Install either at stabilator control cable as follows:
   (1) Route cable around its pulley either over or under stabilator balance arm.
   (2) Connect cable to stabilator balance arm and secure with bolt, washer, nut, and cotter pin. (Check bushing is installed with bolt.)
   (3) Connect cable to the forward cable at the turnbuckle in at fuselage. (Upper at cable connects to right forward cable and the lower cable to let cable.)
   (4) Install cotter pin cable guard at the pulley, where required.
   (5) Set cable tension and check rigging and adjustment.
   (6) Install seats and access panels.

B. RIGGING AND ADJUSTMENT OF STABILATOR CONTROLS

1. Level airplane. (Refer to chapter 8.)

— CAUTION —

Stabilator must contact both stops before control wheel contacts its stops.

2. Check and set the proper degree of stabilator travel, as follows:
   a. To check the stabilator travel, place rigging tool on upper surface of stabilator as per Figure 27-22. (Make tool per dimensions given in Figure 27-23.)
   b. Set, on a bubble protractor, the number of degree up travel as given per Figure 27-24, and place it on the rigging tool. Raise stabilator trailing edge and check protractor bubble is centered when the stabilator contacts its stops.
   c. Set, on protractor, the number of degrees down travel per Figure 27-24. Place it on the rigging tool. Lower stabilator trailing edge. Check protractor bubble is centered when the stabilator contacts its stops.
   d. If stabilator travel is incorrect in up or down position, remove tail cone fairing by removing attaching screws. Use rigging tool and bubble protractor to turn the stops at each stabilator hinge stop in or out (refer to Figure 27-24) for correct degree of travel.
   e. Check stop screw lock nuts are secure and install tail cone fairing.

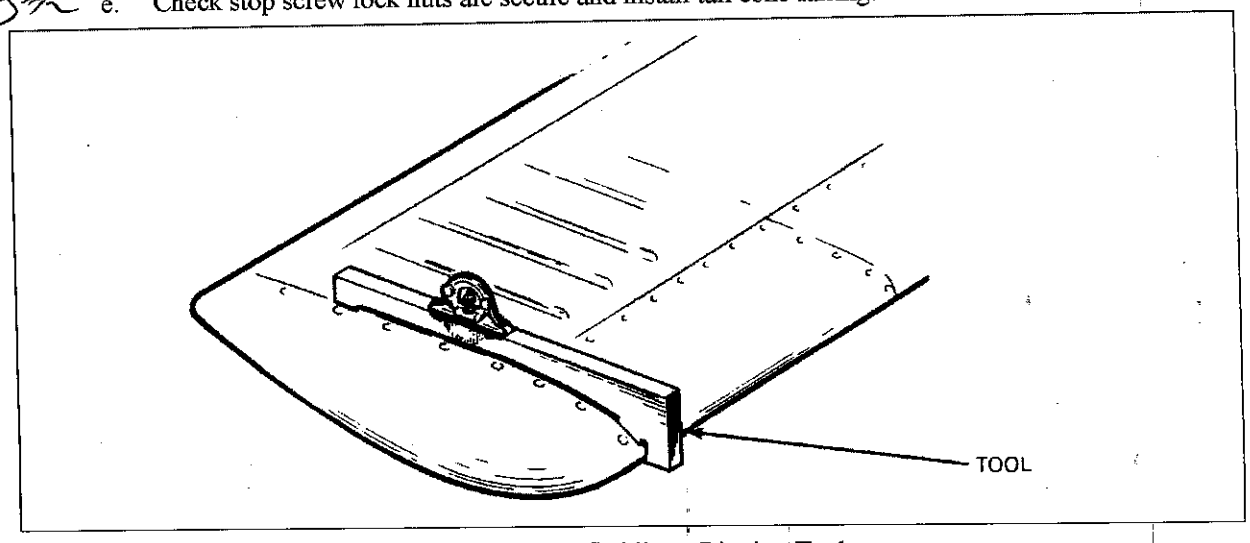

Figure 27-22. Stabilator Rigging Tool

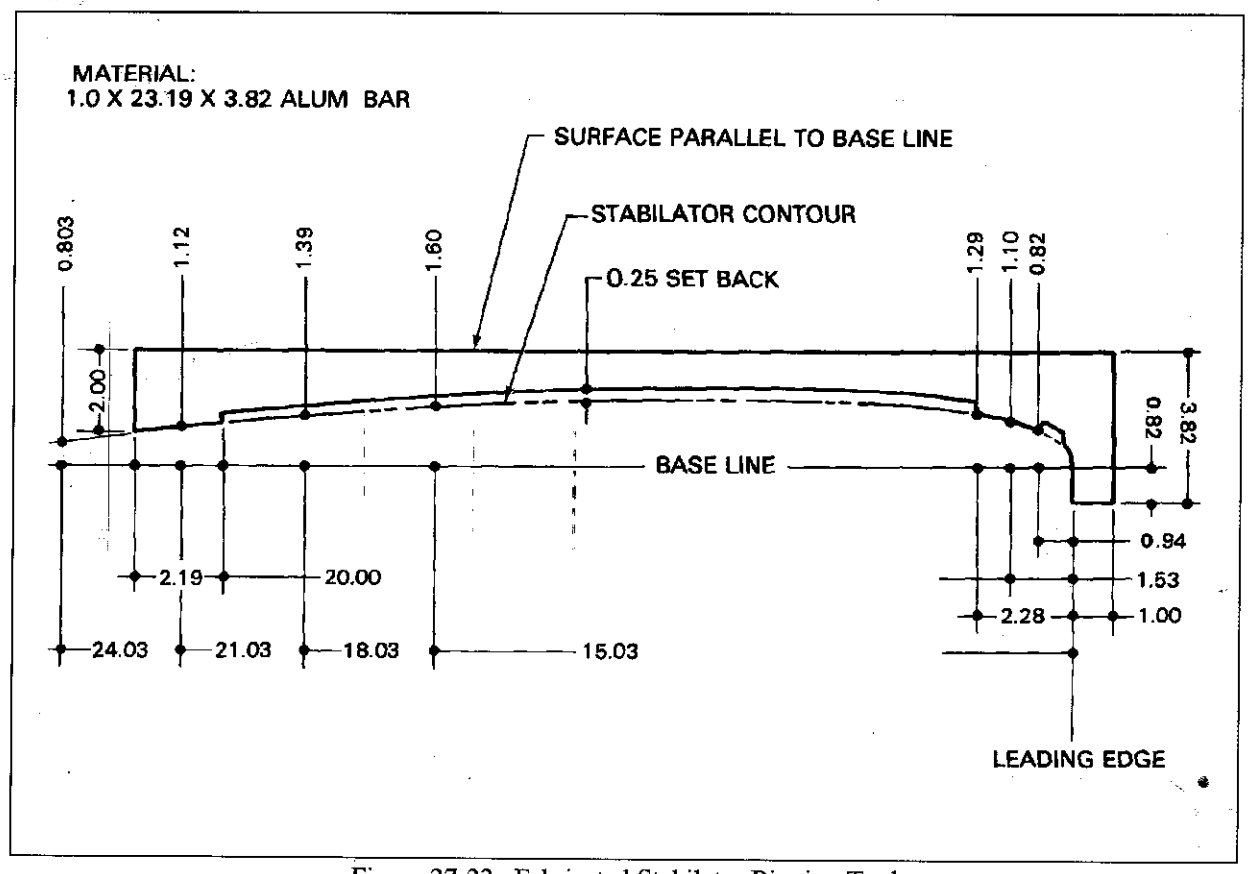

Figure 27-23. Fabricated Stabilator Rigging Tool

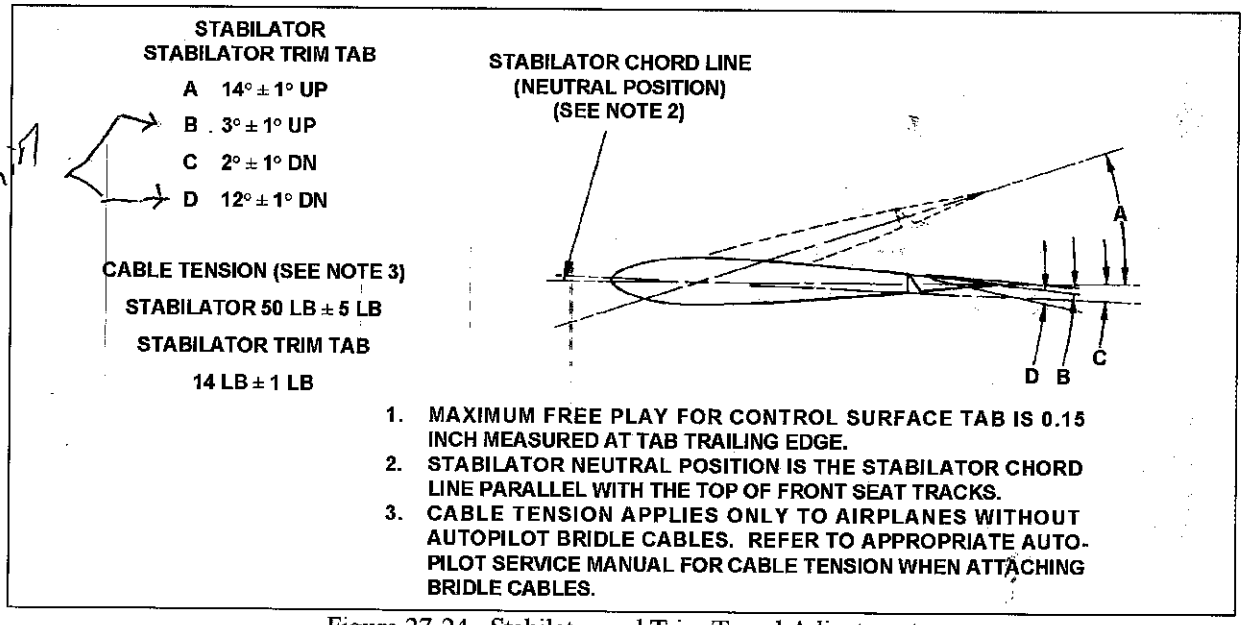

Figure 27-24. Stabilator and Trim Travel Adjustment

3. Check and set stabilator control cable tension, as follows:
   a. Check stabilator travel is correct.
   b. Remove access panel to the at section of the fuselage.
   c. Secure control column in the near forward position. Allow one-quarter inch between column and stop bumper.
   d. Check each control cable or correct tension per Figure 27-24.
   e. If tension is incorrect, loosen lower cable turnbuckle in aft fuselage and adjust the upper cable turnbuckle for proper tension. Obtain cable tension with control wheel one-quarter inch from stop and with stabilator contacting its stop.
   f. Check safety of all turnbuckles and bolts.
   g. With upper cable tension correct, and control wheel forward, adjust lower cable turnbuckle for proper tension.
   h. Check full travel of control wheel with relation to full travel of stabilator to verify stabilator contacts its stops before control wheel contacts its stops. With control wheel in the fore and aft positions, travel distance from the point where stabilator contacts its stops and control wheel contacts its stops should be approximately equal. Adjust turnbuckles if incorrect. Install all pulley guard pins.
   i. Install access panels.
4. Remove airplane from jacks.

C. STABILATOR TRIM CONTROLS

1. Stabilator Trim Assembly

a. Removal Of *Forward* Stabilator Trim Assembly (Refer to Figure 27-25.)

— CAUTION —

Do not damage trim indicator wire.

(1) To remove trim control wheel assembly and trim control cables, remove the panel to the aft section of airplane.
(2) If aft trim cable is not to be removed, block cables at the pulleys in upper aft section of fuselage to prevent unwrapping from trim drum. (Refer to Figure 27-26.)
(3) Loosen the cables if the trim control wheel is to be removed or disconnect if the cables are also to be removed. (Do this at the trim cable turnbuckles in the aft section of the fuselage.
(4) Remove control wheel and drum as follows:
   (a) Remove control wheel cover by removing cover attaching screws.
   (b) Remove wheel assembly from mounting brackets by removing nut, washer, and bolt holding wheel between brackets. (Draw wheel from brackets. Do not damage trim indicator wire.)
   (c) Unwrap left cable from drum.
   (d) Wheel and drum are joined by a push fit. Separate these two items with their center bushing and unwrap right cable.
   (e) Tie cables forward to prevent slipping into floor tunnel.
(5) Remove trim control cables as follows:
   (a) Remove rear seats, floor panel, and front seats.
   (b) Unfasten carpet from aft floor tunnel and lay it forward.

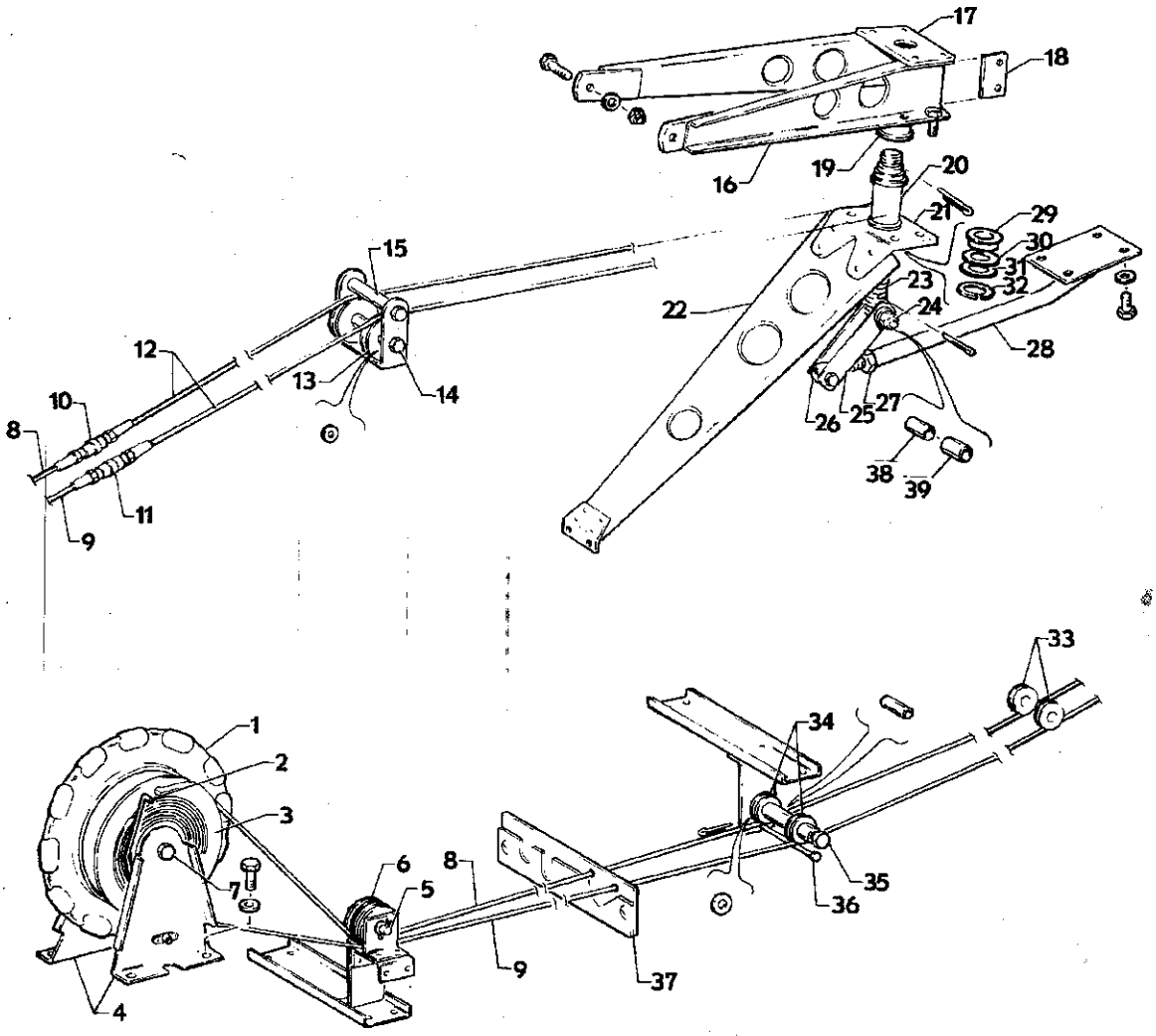

1. CONTROL WHEEL, TRIM
2. INDICATOR, TRIM POSITION
3. DRUM, TRIM CABLE
4. MOUNTING BRACKET
5. CLEVIS PIN, WASHER & COTTER PIN
6. PULLEY CLUSTER
7. BOLT, BUSHING, WASHER & NUT
8. CABLE, RIGHT FORWARD
9. CABLE, LEFT FORWARD
10. TURNBUCKLE, RIGHT
11. TURNBUCKLE, LEFT
12. CABLE, AFT
13. PULLEY CLUSTER
14. BOLT, BUSHING, WASHER (3) & NUT
15. GUARD-BOLT, BUSHING, WASHER & NUT
16. RIB, HORIZONTAL SUPPORT
17. PLATE, RIB
18. GUARD
19. BUSHING, BARREL
20. BARREL, TRIM
21. CLIP, DIAGONAL RIB
22. RIB, DIAGONAL SUPPORT
23. SCREW, TRIM
24. BOLT, WASHER (2) & NUT
25. LINK
26. ROD END
27. JAM NUT
28. ARM, TRIM CONTROL
29. BUSHING BARREL
30. WASHER, THRUST
31. WASHER, SPACER
32. SNAP RING
33. PULLEY CLUSTER
34. PULLEY CLUSTER
35. BOLT, WASHER & NUT
36. GUARD, CABLE
37. RUB BLOCK
38. TRIM LINK BUSHING
39. TRIM LINK SLEEVE

Figure 27-25. Stabilator Trim Control (Floor Control)

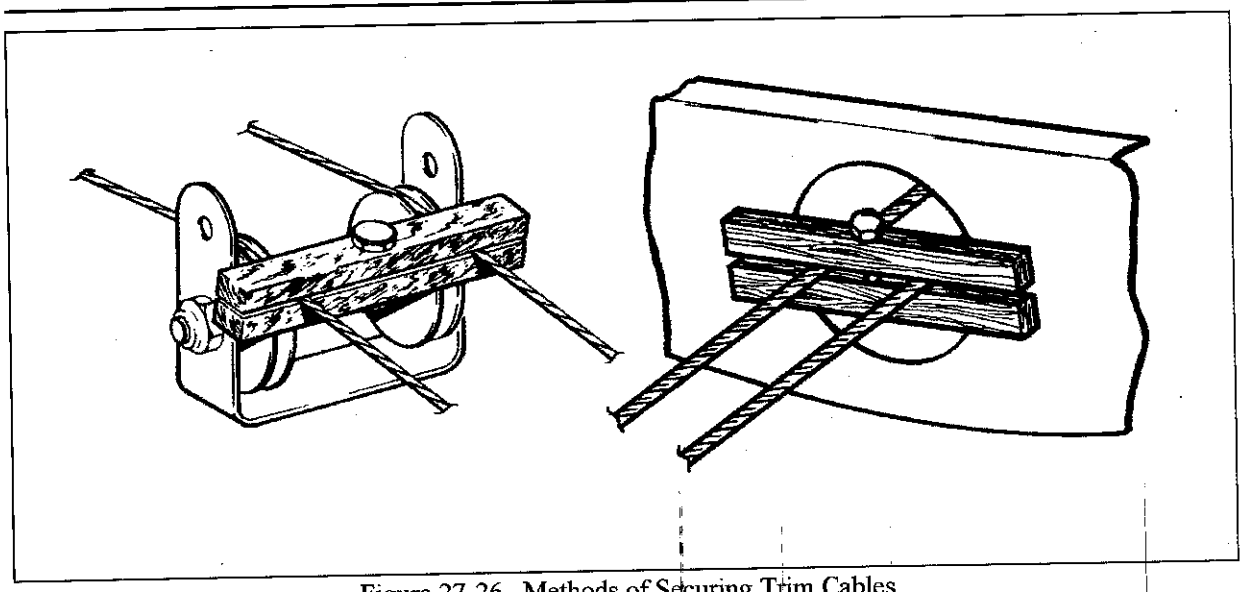

Figure 27-26. Methods of Securing Trim Cables

(c) Remove tunnel cover attaching screws. Remove tunnel cover located between trim control wheel and spar cover.

(d) Remove cable pulleys located in the tunnel by removing cotter pin, washer, and clevis pin.

(e) Remove cable rub blocks on aft side of main spar by removing cable rub block attaching screws .

(f) Remove cable guard pin at pulley cluster aft of wing flap torque tube at station 127.25.

(g) Remove nut, washer, bushing, and bolt and remove cable pulleys in aft section of fuselage at station 156.5.

(h) With cables disconnected from trim control wheel, pull cable(s) through floor tunnel.

b. Installation Of *Forward* Stabilator Trim Assembly (Refer to Figure 27-25.)

(1) Install trim control wheel with drum as follows:

(a) Wrap right trim cable on trim drum by inserting the swaged ball of cable in slot provided in the side (right side) of the drum that mates with control wheel. Wrap drum three wraps of cable in a clockwise direction.

(b) Align the long lug of drum with long slot of wheel and push together to attach control wheel to cable drum.

(c) Wrap left trim cable on drum by inserting the swaged ball of cable in slot provided in the flanged side (left side) of drum and looking at this side, wrap drum with three wraps of cable in a clockwise direction.

(d) Lubricate and install bushing in control wheel and drum.

(e) Align control cables and position control wheel assembly between mounting brackets. Check end of trim indicator wire is positioned in the spiraled slot of the drum with no bind on the end. Install retainer bolt from left side and install washer and nut.

(f) Install cover over control wheel and secure with screws, unless control cables have yet to be installed.

(2) Install trim control cables as follows:
(a) Pull cable(s) through floor tunnel.
(b) Wrap cable drum and install trim control wheel per step (1).
(c) Position cable pulleys on mounting bracket in floor tunnel and install clevis pin, washer, and cotter pin.
(d) Connect cable to the aft cable at turnbuckle in the aft section of fuselage. Install aft cable if not already installed.
(e) Install pulleys in aft lower section of fuselage at station 156.5 forward of cable turnbuckles.
(f) Remove blocks holding aft trim cable and check cables are seated on their pulleys.
(3) Set cable tension and check rigging and adjustment per rigging and adjustment of stabilator trim. Check safety of all turnbuckles.
(4) Install cable guard at underside of the pulleys aft of flap torque tube at station 127.25, and secure.
(5) Install cable rub blocks on aft side of main spar housing and secure with screws.
(6) Install tunnel cover on tunnel and secure with screws.
(7) Install carpet over floor tunnel.
(8) Install cover over trim control wheel and secure with screws and special washers.
(9) Install floor panel and seat belt attachments aft of main spar and secure panel with screws.
(10) Install panel to aft section of airplane and install seats.

c. **Removal Of *Aft* Stabilator Trim Assembly** (Refer to Figure 27-25.)

(1) Remove access panel to aft section of fuselage.
(2) Block trim cables at the first set of pulleys forward of cable turnbuckles in aft fuselage per Figure 27-26.
(3) Disconnect cable at the turnbuckles in aft section of fuselage.
(4) Remove tail cone attaching screws and remove tail cone.
(5) Remove nut, washer, bolt, bushing, and sleeve connecting link to screw, and dis- connect link between trim screw and trim control arm.
(6) Remove cotter pin from top of screw, and turn screw down and out of barrel.
(7) Remove snap ring, washer, and thrust washer from bottom of barrel.
(8) Remove the four attaching nuts, washers, and bolts and disconnect the diagonal rib from horizontal rib that supports the trim assembly.
(9) Pull trim cable from fuselage.

d. **Installation of *Aft* Stabilator Trim Assembly** (Refer to Figure 27-25.)

(1) Wrap trim barrel as follows:
(a) Lay center (as measured equally from each end to center of cable) of trim cable in barrel slot.

—*NOTE*—

Wrap cable evenly to obtain 23 wraps on barrel, as viewed from side opposite slot, and with cables extending out from slotted side.

(b) Bring upper cable through diagonal slot in flange at upper end of barrel, and wrap down in counterclockwise direction.
(c) Bring lower cable through diagonal slot in lower end of barrel, and wrap up in clockwise direction.

(2) Clamp cables between two pieces of wood to prevent unwrapping.
(3) Check barrel bushings are installed in rib plate and clip.
(4) Lubricate bushings and install trim barrel in the bushings between the two support ribs. Attach bottom diagonal rib to horizontal rib and secure with bolt, washers, and nuts.
(5) Install thrust washer, washer, and snap ring on low end of barrel.
(6) Install trim screw in barrel and secure each end with cotter pin through the screw.
(7) Attach link between trim screw and trim control arm. Check bushing and sleeve are in place before installing bolt, washer and nut.
(8) Route cables into fuselage and attach ends to forward trim cables.
(9) Remove blocks holding forward cables tight and holding aft cables at barrel.
(10) Set cable tension and check rigging and adjustment per rigging and adjustment of stabilator trim. Check safety of all turnbuckles and install pulley guard pins.
(11) Install tail cone and secure with screws.
(12) Install access panel to aft section of fuselage.

2. Rigging And Adjustment Of Stabilator Trim (Refer to Figure 27-25.)

a. Level the airplane. (Refer to leveling, chapter 8.)
b. Check for proper stabilator trim cable tension per Figure 27-24. If cables were disconnected, rotate control wheel several times for cables to seat. Check cable tension.
c. Set stabilator in neutral position. (To find neutral, place rigging tool on upper surface of stabilator per Figure 27-22. Zero a bubble protractor,place it on rigging tool and tilt stabilator to center bubble.)
d. With stabilator centered, turn trim wheel until aft end of right trim cable turnbuckle is approximately two inches forward of double pulleys at top of rear bulkhead station 228.3.
e. Check trim screw is turned down until cotter pin stop (in the top of the screw) contacts plate on horizontal support rib of trim assembly. (If the stop is not contacting plate, the links between the screw and trim control arm are not disconnected. Disconnect the two by removing connecting nut, washers, and bolt.) With the turnbuckle at the two inch dimension from pulley, turn screw down until pin contacts plate.
f. Check rod end on tab actuating arm for approximately six threads forward of jam nut.
g. Connect links to trim screw and secure with bolt, washers, and nut.
h. Turn trim control wheel until trim tab streamlines with neutral stabilator.
i. Check protractor bubble over neutral tab and check tab travel per Figure 27-24. (Travel on the protractor is determined by taking difference between protractor reading at neutral and up, and neutral and down.) Bubble must be centered each reading with the airplane level.
j. To obtain correct travels, if incorrect, adjust by disconnecting the links at actuating arm rod end and turning the end in or out to correct travel. Reconnect links to rod end.
k. Secure jam nut on actuating arm rod end.
l. Turn trim wheel to full travel and check for turnbuckle clearance and tab indicator location.

D. STALL WARNING

The stall warning system consists of a lift detector electrically connected to a stall warning horn. As stalling conditions are approached, the lift detector activates the stall warning horn.

The lift detector is on the leading edge of the left wing. A tab will extend beyond the leading edge at the point where lift detector is mounted. With the master switch in the ON position, gently lift the tab; the stall warning horn should sound.

The electrical circuit is protected by a 5 amp STALL WARNING circuit breaker mounted in the circuit breaker panel on the lower right side of the instrument panel.

1. **Removal Of Lift Detector**

— CAUTION —

Master switch must be off before working on lift detector or warning horn. When installing wing, place reference marks on holding plate and wing skin.

a. Remove four screws holding plate around tab. Lift detector is fastened to the plate; remove unit from wing.
b. Mark electrical wires and terminals to aid installation. Remove electrical wires from lift detector; remove lift detector from airplane.

2. **Installation Of Lift Detector**

— NOTE —

Refer to Chapter 91 for electrical schematic of stall warning system

a. Attach electrical wires to their correct terminals on lift detector.
b. Position lift detector with its mounting plate on wing, so sensor blade drops down freely; secure in position with the four screws previously removed.

3. **Adjustment Of Lift Detector**

The lift detector switch is adjusted at the factory when the airplane is test flown, and should not require further adjustment during normal service life of the airplane. If service on the wing requires removing the switch, the following instructions will aid in proper switch positioning.

— CAUTION —

Never adjust switch by bending vane.

a. Loosen the two Phillips head screws, one on either side of vane. If stall warning sounds too late, move switch up. If stall warning sounds too early, move switch down. Tighten screws after adjustments.
b. The only way to test accuracy of the setting is to fly the airplane into a full stall condition and note speed at which the stall warning sounds. Stalls must be made with flaps up and power off. It may be necessary to make several test flights and alternate adjustments before the desired setting is obtained. The stall warning must sound not less than five mph, or more than ten mph before the stall occurs.

— END —

T.C 6

DISTRIBUTION

A. OIL COOLER

B. INSTALLATION OF OIL COOLER

1. Do not apply excessive torque to oil cooler when installing cooler fittings. If rectangular fitting boss is used, use a backup wrench with a scissors motion, so no load is transmitted to cooler. When oil cooler has round fitting boss, do not use excessive torque on fittings.
2. Install pipe thread fitting only far enough to seal with sealing compound.
   a. Apply Lubon no. 404 to all male pipe thread fittings; do not allow sealant to enter system.
   b. If fitting cannot be positioned correctly using a torque of 10 to 15 foot-pounds, another fitting must be used.
3. When attaching lines to cooler, use a backup wrench.
4. After installation, inspect cooler for distorted end cups.
5. Run-up engine. After run-up, check for oil leaks.

THIS SPACE INTENTIONALLY LEFT BLANK

T-C (7)

Filter B3-5-1 remplace

Pas de Procedure dans AMM PA28

(3) With engine operating at normal cruise rpm, gauge should read from 4.8 to 5.2 inches of mercury.
(4) At 1200 rpm, vacuum gauge reading should be more than four inches of mercury.

3. Gyro Filters

—CAUTION—

Service gyro filters on a scheduled basis, no later than 100 hours, or sooner as needed.

Pas de Procedure

The system has a large central filter and a differential vacuum gauge that monitors the filter condition while giving vacuum readings.

—CAUTION—

A central filter combined with a differential vacuum gauge give a decline in panel gauge reading when filter is clogged and vacuum declines below recommended value. Filters should be replaced when gauge reading declines below recom - mended value; do not adjust regulator.

4. Vacuum Regulator

—CAUTION—

Replace regulating valve if panel gauge is checked and found to be accurate, and vacuum gauge reading does not repeat within the range of 4.8 to 5.2 inches of mercury.

—NOTE—

Regulator malfunction tends to increase vacuum power to gyros. A loss of vacuum does not occur. The gyros act as a limiting device to keep vacuum power from exceeding safe levels.

Symptoms that indicate replacement of vacuum regulating valve are:
a. Chatter as indicated by rapid fluctuation of vacuum gauge needle, or an audible sound.
b. Non-repeatability of vacuum gauge reading when panel gauge is not suspect.

B. ENGINE DRIVEN VACUUM PUMP

The vacuum pump is the rotary vane, positive displacement type. The unit consists of an aluminum housing containing a tempered sleeve in which an offset rotor is incorporated. The assembly is driven by a coupling mated to the engine driven gear assembly. The pump is mounted on the accessory section of engine.

TS - Verification attenuate Bogey

TS

CHART 7101. ENGINE FAULT ISOLATION (Sheet 2 of 6)

Fault	Cause	Remedy
Failure of engine to start. (cont.)	Magnetized impulse coupling	Demagnetize impulse couplings (left magneto only).
	Frozen spark plug electrodes.	Replace spark plugs or dry out removed plugs.
	Defective battery.	Replace with charged battery.
	Lack of sufficient fuel flow.	Disconnect fuel line and check fuel flow.
	Water in carburetor.	Drain carburetor and fuel lines.
	Mixture control in idle cut-off.	Open mixture control.
Failure of engine to idle properly.	Shorted ignition switch or loose ground	Check and replace or repair.
	Incorrect carburetor idle adjustment.	Adjust throttle stop to obtain correct idle.
	Idle mixture.	Adjust mixture. Refer to engine manufacturer's handbook for proper procedure.
	Leak in the induction system.	Tighten all connections in the induction system. Replace any defective parts.
	Uneven cylinder compression.	Check condition of piston rings and valve seats.
	Faulty ignition system.	Check entire ignition system.
	Open primer.	Lock primer.
	Improper spark plug setting for altitude.	Check spark plug gap.
	Dirty air filter.	Clean or replace.
Low power and uneven running engine. NRE RAS	Insufficient fuel pressure.	Adjust fuel pressure.
	Mixture too rich; indicated by sluggish engine operation, red exhaust flame and black smoke.	Check primer. Adjustment of carburetor indicated.

CHART 7101. ENGINE FAULT ISOLATION (Sheet 3 of 6)

Fault	Cause	Remedy
Low power and uneven running engine. (cont.)	Mixture too lean; indicated by overheating or backfiring.	Check fuel lines for dirt or other restrictions. Check fuel supply.
WRE RAS	Leaks in induction system.	Tighten all connections. Replace defective parts.
WRE RAS	Defective spark plugs.	Clean and adjust or replace spark plug.
WRE RAS	Excessive blow-by.	Usually caused by weak or stuck rings. Overhaul.
WRE RAS	Improper engine operation.	Check entire engine.
WRE RAS	Improper grade of fuel.	Fill tank with recommended grade.
WRE RAS	Magneto breaker points not working properly .	Clean points. Check internal timing of magneto.
WRE RAS	Defective ignition wire.	Check wire with electric tester. Replace defective wire.
WRE RAS	Defective spark plug terminal connectors.	Replace connectors on spark plug wire.
WRE RAS	Restriction in exhaust system.	Check for loose muffler baffles.
WRE RAS	Improper ignition timing.	Check magnetos for timing and synchronization
Failure of engine to develop full power.	Throttle lever out of adjustment.	Adjust throttle lever.
WRE RAS	Leak in induction system.	Tighten all connections, and replace defective parts.
WRE RAS	Restriction in carburetor air scoop.	Examine air scoop and remove restriction.
WRE RAS	Improper fuel.	Fill tank with recommended fuel.
WRE RAS	Faulty ignition.	Tighten all connections. Check system. Check ignition timing.

CHART 7101. ENGINE FAULT ISOLATION (Sheet 4 of 6)

Fault	Cause	Remedy
Failure of engine to develop full power. (cont.) NCE RAS	Carburetor heat ON or leaking.	Select carburetor heart OFF or adjust.
	Improper fuel flow.	Check fuel strainer, gauge and flow at inlet.
Rough running engine. NCE RAS NCE RAS NCE RAS NCE RAS NCE RAS NCE RAS	Cracked engine mounts.	Repair or replace engine mount.
	Defective mounting bushings.	Install new mounting bushings.
	Unbalanced propeller.	Remove propeller and have it checked for balance.
	Bent propeller blades.	Check propeller for blade track.
	Lead deposit on spark plug.	Clean or replace plugs.
	Malfunctioning engine.	Check entire engine.
	Uneven compression.	Check compression
Low oil pressure.	Insufficient oil.	Check oil supply.
	Dirty oil screens.	Remove and clean oil screens.
	Defective pressure gauge.	Replace gauge.
	Air lock or dirt in relief valve.	Remove and clean oil pressure relief valve.
	Leak in suction line or pressure line.	Check gasket between accessory housing crankcase.
	High oil temperature.	See "High Oil Temperature" in Fault Column.
	Stoppage in oil pump intake passage.	Check line for obstruction. Clean suction screen.
	Worn or scored bearings.	Overhaul engine.
High oil temperature.	Insufficient air cooling.	Check air inlet and outlet for deformation or obstruction.

TS: remplacement échappements TS (3)

Remplacement échappements + silencieux

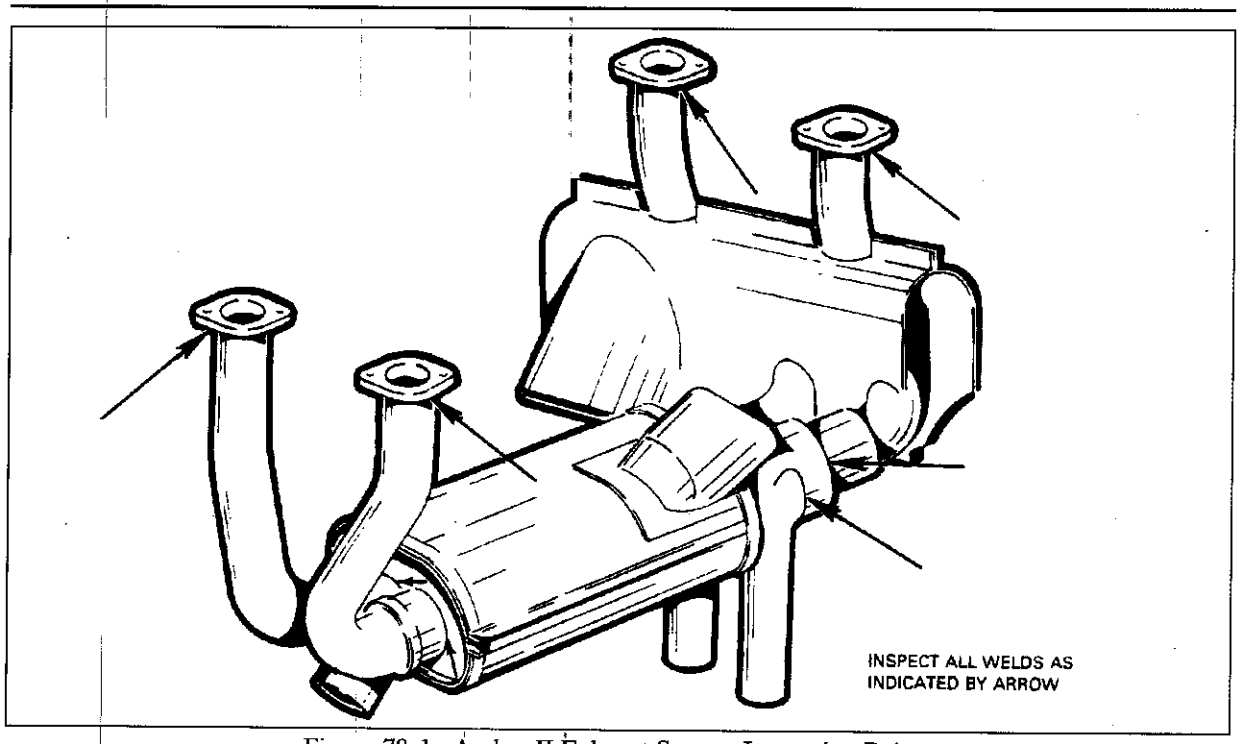

Figure 78-1. Archer II Exhaust System Inspection Points

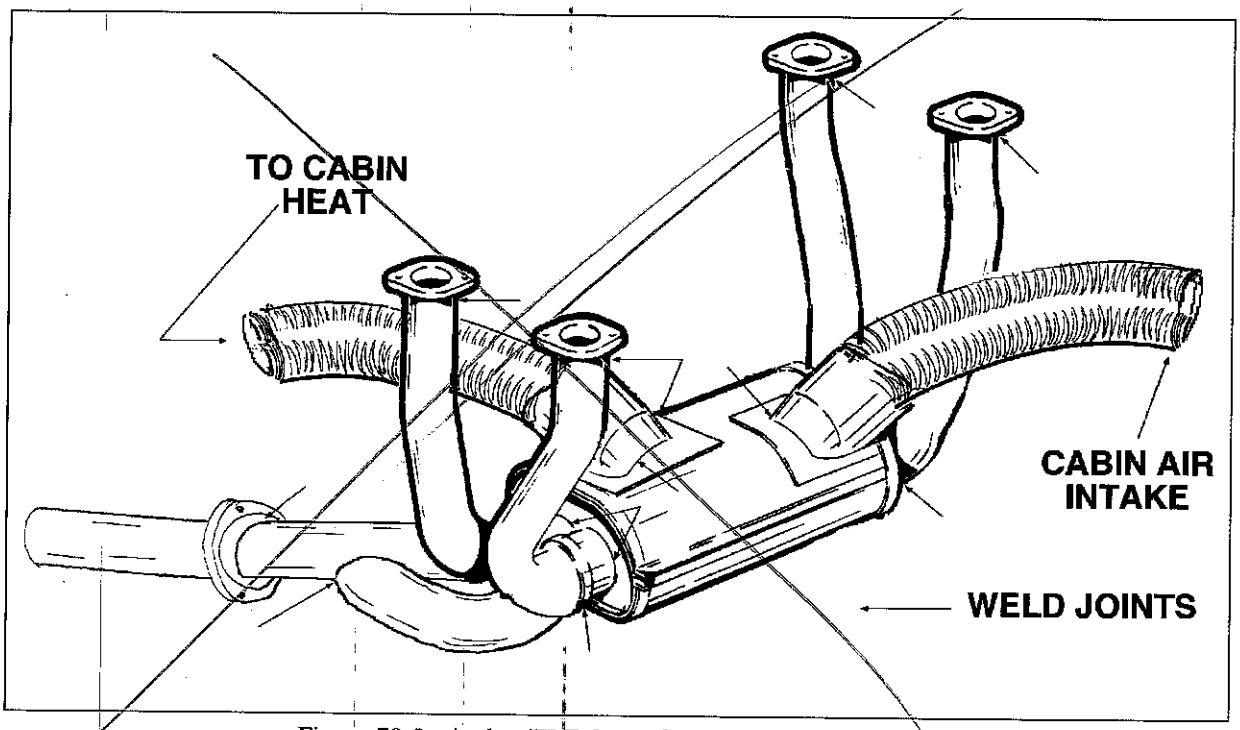

Figure 78-2. Archer III Exhaust System Inspection Points

T-C 4
T-S 4

PASSENGER/CREW

A. CABIN DOOR

This airplane has one entrance door on the right side of the fuselage.

1. Removal Of Door

a. Remove clevis bolt, washer and bushing from door holder assembly.
b. Remove cotter pins, clevis pins, and washers from serrated door hinges.
c. Remove door from airplane.

2. Installation Of Door

a. Insert door into position and install washers, clevis bolts, and cotter pins on door hinges.
b. For door adjustment refer to adjustment of door.
c. Hook up and install clevis bolt, bushing, and washer into door holder assembly.

3. Adjustment Of Door

a. For proper vertical adjustment of door, insert the necessary washer combination between cabin door hinge and fuselage bracket assembly.
b. Make additional adjustments by tapping out serrated door hinge bushings and rotating them to find hinge centerline for proper door fit.
c. To improve sealing, lubricate door seals with any non-fluorocarbon or similar dry lubricant spray, or wipe with MIL-H-5606 lubricant, as needed, .

B. DOOR LATCH MECHANISM

1. Removal Of Door Latch Mechanism

a. Remove door latch mechanism by removing door trim upholstery and the screws holding latch plate and latch mechanism to door.
b. Disconnect latch pull rod from the inside door handle.
c. Remove complete latch mechanism.

2. Installation Of Door Latch Mechanism

a. Place latch assembly into position on door.
b. Connect latch pull rod to inside door handle.
c. Replace screws holding latch plate and mechanism to door. Install door trim upholstery and secure with screws.

3. Adjustment Of Door Latch Mechanism

a. Loosen screws on striker plate.
b. Adjust and tighten screws.

C. DOOR LOCK ASSEMBLY

1. Removal Of Door Lock Assembly

a. Remove door trim upholstery by removing attachment screws.
b. Loosen nut on lock assembly and remove lock by turning it sideways.

2. **Installation Of Door Lock Assembly**

   a. Install lock in door by turning it sideways and placing it through the opening.
   b. Replace nut on back of lock assembly and tighten.
   c. Replace door trim upholstery and secure with attachment screws.

D. DOOR SAFETY LATCH

1. **Removal Of Door Safety Latch**

   a. Remove the two handles and five screws holding pan inside the door.
   b. Remove pan and pull latch assembly through opening on door.

2. **Installation Of Door Safety Latch**

   a. Place latch assembly into position for installation.
   b. Replace pan and install the five screws and handles.
   c. Check latch assembly for operation and verify it is not rubbing panels.

3. **Adjustment Of Door Safety Latch**

   a. Remove two screws from latch plate at top of door opening.
   b. Remove plate and turn loop assembly in or out for adjustment.
   c. Replace latch plate and secure with two attachment screws.

E. REMOVAL AND INSTALLATION OF DOOR SNUBBER. (Refer to Figure 52-1)

The neoprene rubber door snubber is incorporated in the cabin door jamb to improve door sealing. Installation on aircraft not equipped with the snubber is per **Field Service Kit For Improved Door Sealing, Kit No. 763 962.**

— CAUTION —

Replace existing seal if torn or deteriorated Bond the seal if loose or marginal, using one of the following adhesives:
1. 3MEC1300L (preferred)
2. Scotchgrip 2210
3. Proco #6205-1
Refer to the consumable materials list for vendor information.

1. Remove snubber as follows:
   a. Back off windlace retaining trim screws, roll windlace back out of the way, and tape it there. Remove sill scuff plate and door holder.
   b. Apply mineral spirits to snubber to loosen adhesive. Use plastic scraper or appropriate instrument, and scrape off snubber while applying mineral spirits to dissolve adhesive.
   c. With snubber removed, use a clean cloth and mineral spirits to remove all excess adhesive.
2. If door jamb is flaking or excessively scuffed, do as follows:
   a. Rub down and feather finish with wet or dry emery cloth. Go over the surface with fine (400 grit) paper.
   b. Wipe surface with Prep-Sol or similar cleaner which will not leave an oily residue.
   c. Prime, sand (400 grit), and paint. Allow paint to dry thoroughly before proceeding.

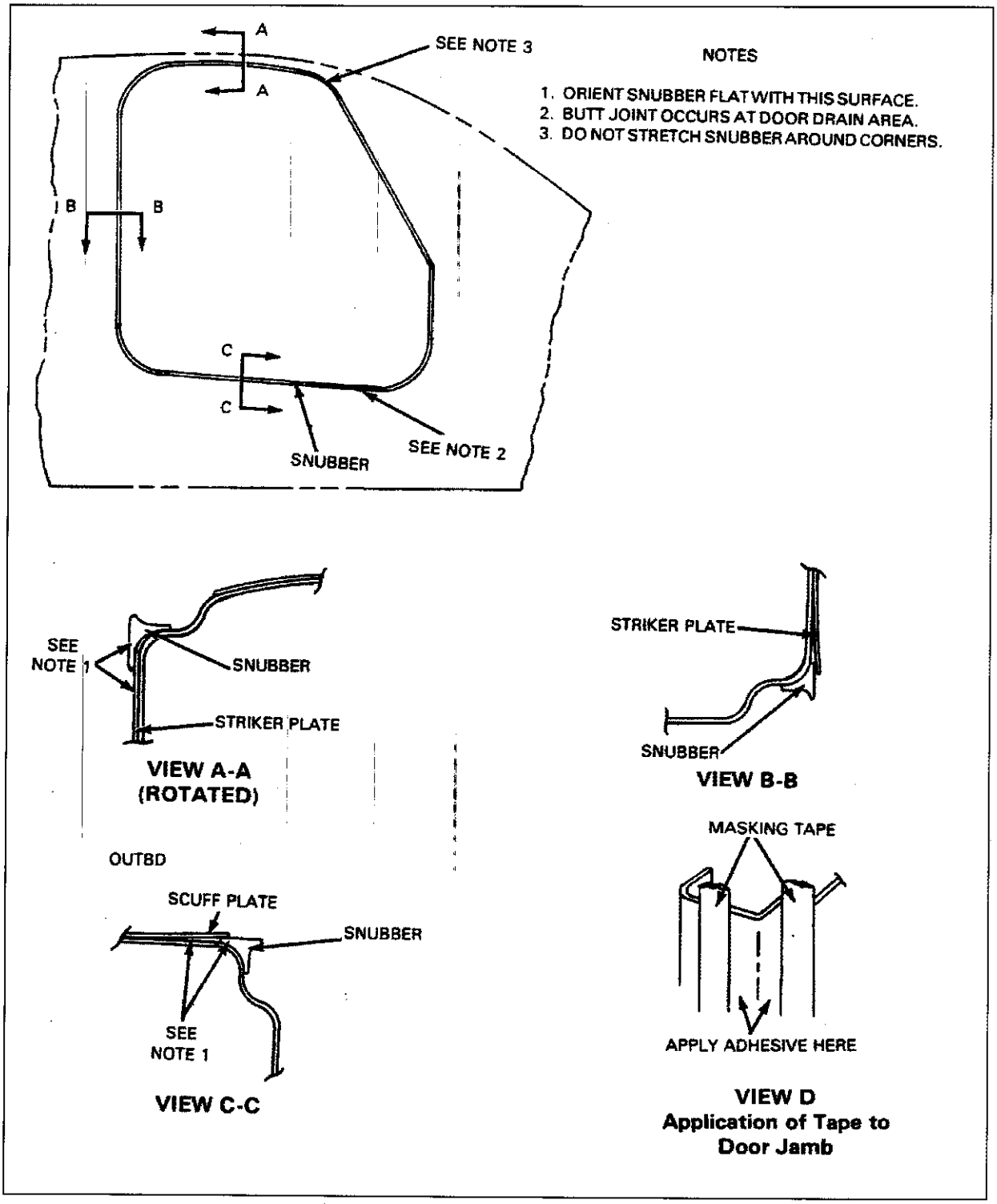

Figure 52-1. Installation of Door Snubber

3. Install door snubber as follows:

— CAUTION —

Do not pre-stretch snubber as this will cause cracks in the snubber.

— CAUTION —

Check windlace is rolled back and taped to completely expose door jamb and prevent sealant from adhering to windlace.

a. Clean door jamb using "Prep-Sol" or a similar cleaner which will not leave an oily residue.

— NOTE —

Normal "tack-time" for EC1300L is 30-45 minutes (less in a warm area). Install snubber before adhesive tack time so snub - ber may be manipulated into correct position. If adhesive sets before snubber installation, reactivate by using a clean rag moistened with Toluol or M.E.K.

For a clean installation. mask jamb as shown in Figure 52- 1.

— CAUTION —

Verify snubber leg goes under striker plate for side latch and over striker plate for upper latch. (Refer to figure 52-1.)

b. Apply adhesive to door jamb as shown in Figure 52-1, view D, and to the inside surface of snubber.
c. Begin at door drain hole area, and work clockwise around jamb. Position snubber with protruding leg facing outboard. Apply pressure to snubber to remove entrapped air and check for an effective bond.
d. Allow adhesive to cure at least 24 hours with door open. Open door as long as possible for a maximum cure.
e. Check for proper cure by peeling back a small local area of the snubber legs.
f. When adhesive has cured, clean any adhesive smears with a clean cloth and mineral spirits or Toluol. Remove masking tape and install windlace, sill scuff plate, and door holder.
g. To compensate for the added snubber, adjust door latches for a flush door to fuselage fit.
h. Coat snubber with silicone after all adjustments and curing.

TD 3

I. CLEANING, INSPECTION, AND REPAIR OF BRAKE ASSEMBLY

1. Clean assembly with a suitable solvent and dry thoroughly.
2. Check cylinder housing wall and piston for scratches, burrs, corrosion, etc. that will damage O-rings.
3. Check general condition of the brake bleeder screw and lines.
4. Check brake disc for grooves, scratches, pits, or coning. Coning beyond 0.015 inch in either direction will require replacement. Minimum thickness of disc 164-20 used on wheel assembly 40-86B is 0.205 inch. (Refer to figure 32- 13.) A single groove or isolated grooves up to 0.031 inch deep will not require replacement. Grooving of the entire surface will reduce lining life and must be replaced. If a powdery rust appears on brake disc, one or two taxi-braking applications should clear it up. If rust is heavier, remove the disc for wire brushing, and sand with 220 grit sandpaper. To remove wheel disc, refer to removal and disassembly of main wheel.
5. Remove lining from backing plates by drilling or punching out the old rivets, and installing a new set. Use the proper rivets and a rivet set that will properly stake the lining and form a correct flare of the rivet. (A rivet setting kit is available through Piper dealers as part number 754 165.)
6. After new linings are installed, condition as follows:

   Perform a minimum of six light pedal effort braking applications from 25 to 40 mph, allowing brake discs to partially cool between stops.

J. ASSEMBLY AND INSTALLATION OF BRAKE ASSEMBLY (Refer to Figure 32-11.)

1. Lubricate piston O-ring with fluid MIL-H-5606 and install on piston. Slide piston in cylinder housing until flush with housing surface.
2. Slide lining pressure plate onto anchor bolts of housing.
3. Slide cylinder housing assembly on the gear torque plate.
4. Position lining back plate between wheel and brake disc. Install the two bolts to secure assembly.
5. Connect brake line to brake cylinder housing.
6. Bleed brake system. (Refer to bleeding brakes.)

K. REMOVAL OF BRAKE MASTER CYLINDER (HAND BRAKE) (Refer to Figure 32-14.)

1. Disconnect inlet supply line from the fitting at the top of cylinder and drain fluid from reservoir and line into a suitable container.
2. Disconnect pressure line from the fitting on cylinder and drain fluid from cylinder line.
3. Disconnect the end of cylinder rod from brake handle by removing cotter pin that safeties the connecting clevis pin. Remove clevis pin and spacer washers.
4. Disconnect base of cylinder from mounting bracket by removing attaching bolt assembly.
5. Remove handle assembly by removing attaching bolt assembly holding handle to mounting bracket.

L. DISASSEMBLY OF BRAKE MASTER CYLINDER

1. Remove cylinder from mounting bracket.
2. To disassemble cylinder, remove piston rod assembly by removing snap ring from the annular slot at the rod end of cylinder. Draw piston rod assembly from cylinder.
3. Disassemble piston rod assembly by removing small snap ring securing the retainer bushing, spring, piston, seal, gland, and the large retainer spring.
4. Remove O-rings from piston and gland.

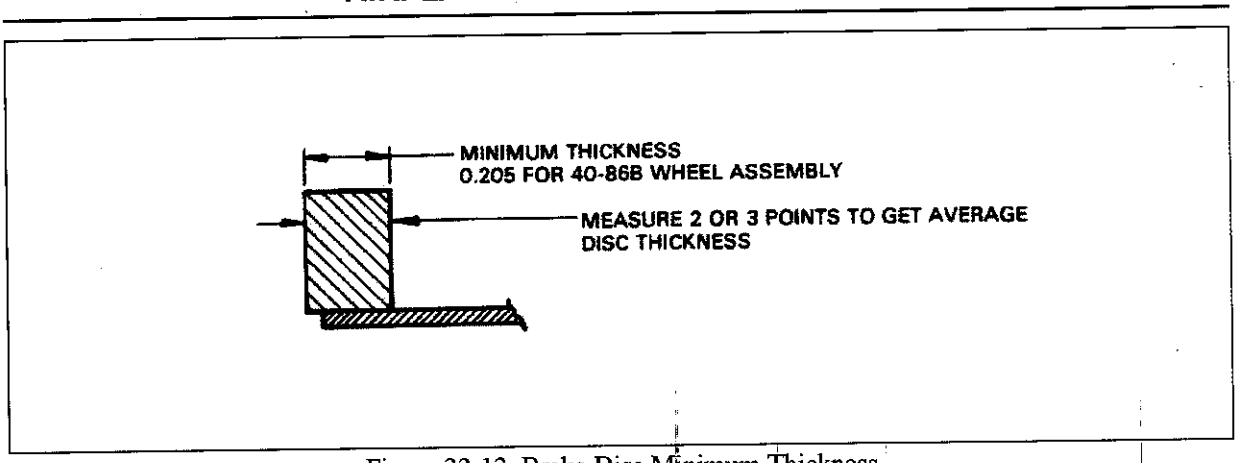

Figure 32-13. Brake Disc Minimum Thickness

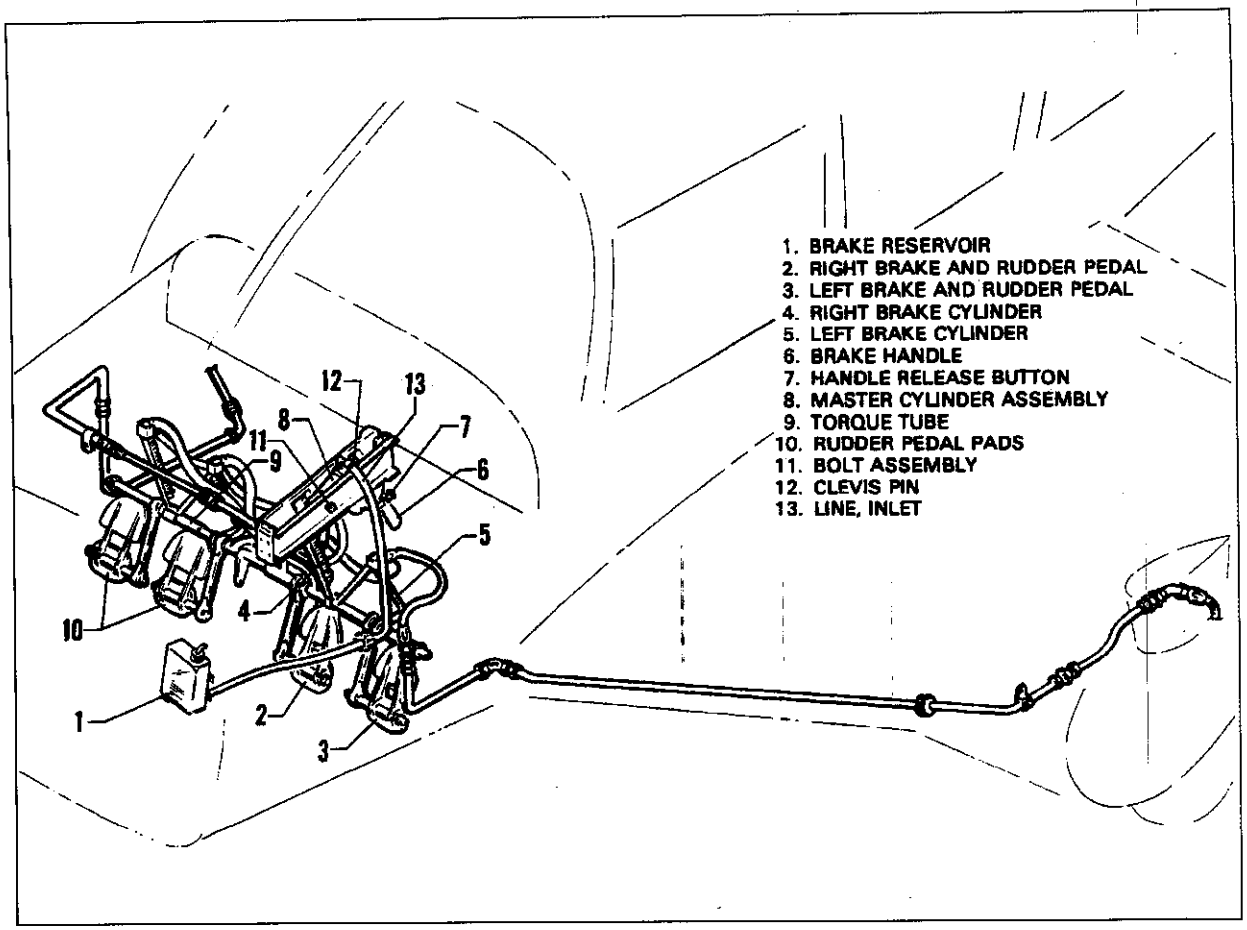

Figure 32-14. Brake System Installations

M. CLEANING, INSPECTION, AND REPAIR OF BRAKE MASTER CYLINDER

1. Clean cylinder parts with a suitable solvent and dry thoroughly.
2. Inspect interior walls of cylinder for scratches, burrs, corrosion, etc.
3. Inspect the general condition of the fitting threads of cylinder.
4. Check piston for scratches, burrs, corrosion, etc.
5. Cylinder repairs are limited to polishing out small scratches, burrs, etc., and O-rings.

N. ASSEMBLY OF BRAKE MASTER CYLINDER

—NOTE—

Use a small amount of hydraulic fluid (MIL-H-5606) on O-ring and component parts to prevent damage and for ease of handling during assembly.

1. Install new O-ring on inside and outside of packing gland and on outside of piston.(Use a cone placed against the piston when installing Teflon O-ring on piston. The cone may be plastic or metal with dimensions per figure 32-15.)
2. To assemble piston rod assembly, install on rod, in order: roll pins, return spring retainer washer, retaining spring, packing gland with O-rings, seal, piston with O-ring, spring, and retainer bushing. Secure with snap ring on rod end.
3. Insert piston rod assembly in housing and secure packing gland with snap ring.
4. Install cylinder. (Refer to installation of brake master cylinder.)

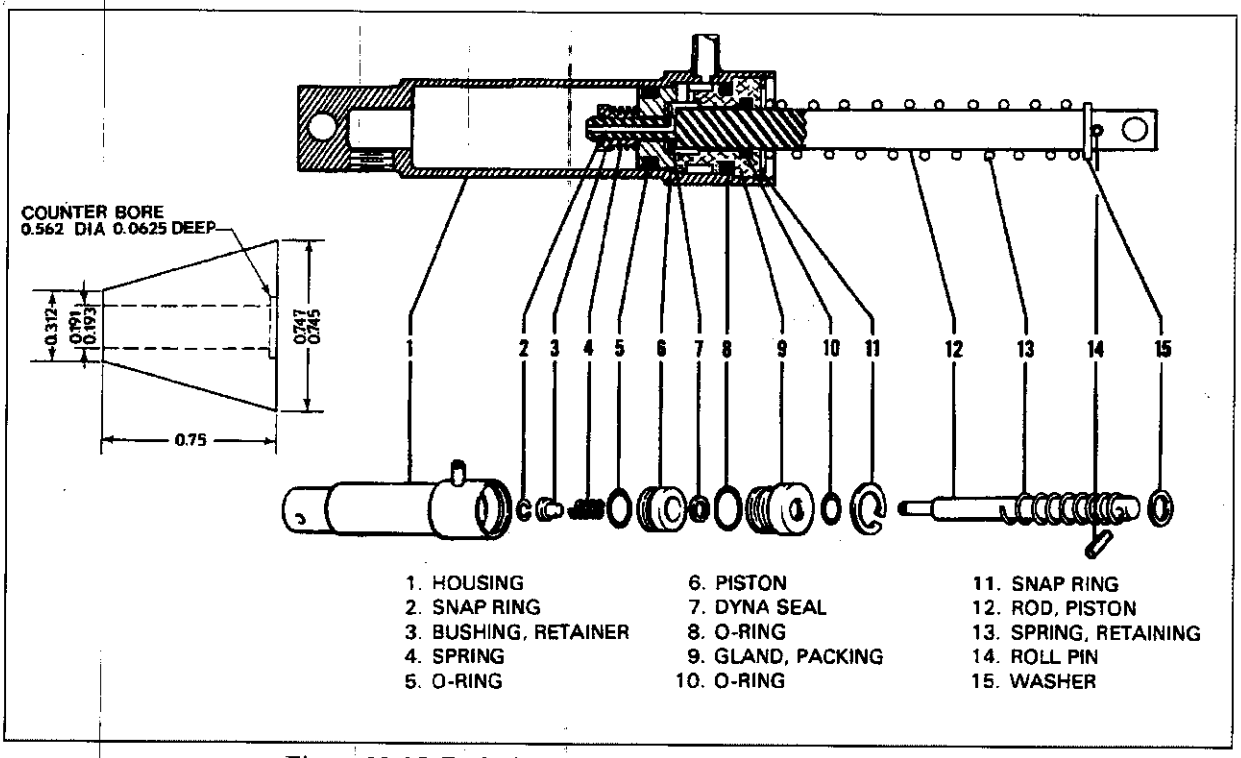

Figure 32-15. Brake Master Cylinder (Hand/Parking Brake)

O. INSTALLATION OF BRAKE MASTER CYLINDER (HAND BRAKE) (Refer to Figure 32-14.)

1. Install brake handle assembly between its mounting bracket and secure with bolt, washers, nut, and cotter pin. Washers must be placed on each side of handle, between the bracket, and under the nut.
2. Place cylinder between mounting bracket and secure base end with bolt, washers, nut, and cotter pin. Place washers on each side of cylinder and under the nut.
3. Connect rod end of cylinder to brake handle with a clevis pin and thin washers. Safety the clevis with a cotter pin.
4. Connect pressure line to fitting at bottom of cylinder.
5. Connect inlet supply line to the fitting at the top of cylinder and secure with spring clamp.
6. Bleed brake system. (Refer to bleeding brakes.)

P. REMOVAL OF BRAKE CYLINDER (TOE BRAKE) (Refer to Figure 32-16.)

1. Disconnect upper and lower lines from cylinder and cap lines to prevent fluid leakage, or drain fluid from brake reservoir and master cylinder.
2. Remove cylinder from its attachment fittings by removing cotter pins that safety the cylinder attaching pins, and removing pins.

Q. DISASSEMBLY OF BRAKE CYLINDER

1. Cleveland cylinder number 10-27. (Refer to Figure 32-17.)
   a. Remove cylinder from its mounting bracket. (Refer to removal of brake cylinder.)
   b. To disassemble cylinder, remove piston rod assembly by removing snap ring from the annular slot in cylinder housing. Draw piston rod assembly from cylinder.
   c. Disassemble piston rod assembly by removing roll pin, then piston assembly, seal, and packing gland.
   d. Remove O-rings from piston and packing gland.
2. Cleveland cylinder number 10-30. (Refer to Figure 32-17.)
   a. Remove cylinder from its mounting bracket. (Refer to removal of brake cylinder.)
   b. To disassemble cylinder, remove piston rod assembly by removing retaining ring from the annular slot in cylinder housing. Draw piston rod assembly from cylinder.
   c. Disassemble piston rod assembly by removing retaining ring, sleeve, spring, piston assembly, O-ring, gland, and, return spring.
   d. Remove O-rings from piston and packing gland.
3. Gar-Kenyon cylinder number 17000. (Refer to Figure 32-17.)
   a. Remove cylinder from its mounting bracket. (Refer to removal of brake cylinder.)
   b. To disassemble cylinder, remove piston rod assembly by unscrewing fitting from cylinder.
   c. Disassemble piston rod assembly by removing retaining ring securing the sleeve, and then removing the spring, piston, seal, fitting, and the large return spring.
   d. Remove O-rings from piston and fitting.

R. CLEANING, INSPECTION, AND REPAIR OF BRAKE CYLINDER

1. Clean cylinder parts with a suitable solvent and dry thoroughly.
2. Inspect interior walls of cylinder for scratches, burrs. corrosion, etc.
3. Inspect general condition of the cylinder fitting threads.
4. Check piston and valve for scratches. burrs, corrosion, etc.
5. Repairs to cylinder are limited to polishing out small scratches, burrs, etc.. and replacing valve, washer, seal. and O-rings.

COMPONENT HISTORY

ALL DOCUMENTS

WO: 9073

Ref.	Date / Case#	Origin / Destination	Component / Batch	Aircraft FH	FC
1 M.OUT 2252 # 1 Y/ref	19/09/18	ATIS 3979 ATIS	P/N AA48110-2 S/N AEROACCESSORIES-1-T OIL FILTER Qty. 1 Bar.code 1841 Condition NEW		
2 M.OUT 2252 # 2 Y/ref	19/09/18	ATIS 3980 ATIS	P/N 06E19769-1-00 S/N ATIS1006 GASKET Qty. 1 Bar.code 1842 Condition NEW		
M.OUT 2252 # 3 Y/ref	19/09/18	ATIS 3981 ATIS	P/N 2502MRMH-1/2 S/N 0312606417 Torque Wrench Qty. 1 Bar.code 10 Condition INS/REP		
M.OUT 2252 # 4 Y/ref	19/09/18	ATIS 3982 ATIS	P/N IIIAIR S/N 140084766 Poignée de Gonflage Wika Qty. 1 Bar.code 255 Condition NEW		
M.OUT 2252 # 5 Y/ref	19/09/18	ATIS 3983 ATIS	P/N M2R100F S/N 1529 Click Torque Wrench Qty. 1 Bar.code 14 Condition INS/REP		
3 M.OUT 2252 # 6 Y/ref	19/09/18	ATIS 3984 ATIS	P/N ARB3-5-1 S/N 10021702-POCF676 FILTER VACCUM Qty. 1 Bar.code 1843 Condition NEW		
4 M.OUT 2253 # 1 Y/ref	20/09/18	ATIS 3986 ATIS	P/N MS24693-S58 S/N 1031812 SCREW Qty. 6 Bar.code 1845 Condition NEW		
~~5~~ ASS 2254 # 1 Y/ref	20/09/18	3987 ATIS	P/N MS24566-1B S/N 7364884430 PULLEY Qty. 2 Bar.code 1511 Condition NEW		0
ASS 2255 # 1 Y/ref	20/09/18	3988 ATIS	P/N 481-613 S/N 7364826138 PULLEY Qty. 2 Bar.code 1513 Condition NEW		0
ASS 2257 # 1 Y/ref	20/09/18	3990 ATIS	P/N MS20220-1 S/N 7364777787 PULLEY Qty. 2 Bar.code 1512 Condition NEW		0
ASS 2258 # 1 Y/ref	20/09/18	3991 ATIS	P/N 481-799 S/N 7364883020 PULLEY Qty. 4 Bar.code 1509 Condition NEW		0
5 M.OUT 2259 # 1 Y/ref	20/09/18	ATIS 3991 ATIS	P/N 481-799 S/N 7364883020 PULLEY Qty. 4 Bar.code 1509 Condition NEW		

COMPONENT HISTORY

ALL DOCUMENTS

WO: 9073

	Ref.	Date / Case#	Origin / Destination	Component / Batch	Aircraft FH	FC
6	M.OUT 2259 # 2 Y/ref	20/09/18	ATIS 3990 ATIS	P/N MS20220-1 S/N 7364777787 PULLEY Qty. 2 Bar.code 1512 Condition NEW		
7	M.OUT 2259 # 3 Y/ref	20/09/18	ATIS 3988 ATIS	P/N 481-613 S/N 7364826138 PULLEY Qty. 2 Bar.code 1513 Condition NEW		
8	M.OUT 2259 # 4 Y/ref	20/09/18	ATIS 3987 ATIS	P/N MS24566-1B S/N 7364884430 PULLEY Qty. 2 Bar.code 1511 Condition NEW		
	ASS 2260 # 1 Y/ref	20/09/18	3992 ATIS	P/N MS20220-2 S/N 7364744334 PULLEY Qty. 1 Bar.code 1510 Condition NEW		0
9	M.OUT 2261 # 1 Y/ref	20/09/18	ATIS 3992 ATIS	P/N MS20220-2 S/N 7364744334 PULLEY Qty. 1 Bar.code 1510 Condition NEW		
10	M.OUT 2264 # 1 Y/ref	20/09/18	ATIS 3993 ATIS	P/N PIM0007 S/N 012128-005 MUFFLER Qty. 1 Bar.code 902 Condition NEW		
11	M.OUT 2266 # 1 Y/ref	20/09/18	ATIS 3997 ATIS	P/N 77611 S/N 2110882 GASKET EXAUST Qty. 4 Bar.code 730 Condition NEW		
12	M.OUT 2266 # 2 Y/ref	20/09/18	ATIS 3998 ATIS	P/N STD1410 S/N 1022168 NUT Qty. 1 Bar.code 1857 Condition NEW		
13	M.OUT 2267 # 1 Y/ref	20/09/18	ATIS 3999 ATIS	P/N NAS1149F0463P S/N ATIS-BR558 WASHER Qty. 4 Bar.code 1858 Condition NEW		
14	M.OUT 2267 # 2 Y/ref	20/09/18	ATIS 4000 ATIS	P/N MS21046C4 S/N ATISBR649 NUT Qty. 2 Bar.code 1859 Condition NEW		
15	M.OUT 2269 # 1 Y/ref	20/09/18	ATIS 4002 ATIS	P/N NAS1149F0363P S/N ATIS-BR799 WASHER Qty. 2 Bar.code 1860 Condition NEW		
16	M.OUT 2273 # 1 Y/ref	21/09/18	ATIS 4012 ATIS	P/N LW12681 S/N 7364799649 GASKET - MAGNETO Qty. 2 Bar.code 1861 Condition NEW		

COMPONENT HISTORY

ALL DOCUMENTS

WO: 9073

	Ref.	Date / Case#	Origin / Destination	Component / Batch	Aircraft FH FC
17	M.OUT 2274 # 1 Y/ref	21/09/18	ATIS 4013 ATIS	P/N H65846-00 S/N PAST INC-F995786 PLATE: PLACARD,ENGINE CONT Qty. 1 Bar.code 896 Condition NEW	
18	M.OUT 2274 # 2 Y/ref	21/09/18	ATIS 4014 ATIS	P/N H79600-00 S/N 7363813080 Housing, compass Qty. 1 Bar.code 826 Condition NEW	
19	M.OUT 2274 # 3 Y/ref	21/09/18	ATIS 4015 ATIS	P/N H67232-40-41 S/N PAST.INC-F995786 COVER, ENGINE CONTROL Qty. 1 Bar.code 519 Condition NEW	
20	M.OUT 2277 # 1 Y/ref	24/09/18	ATIS 4017 ATIS	P/N MS35206-234 S/N 88143 SCREW MACHINE Qty. 1 Bar.code 1862 Condition NEW	
21	M.OUT 2277 # 2 Y/ref	24/09/18	ATIS 4018 ATIS	P/N AD42BS S/N 872363 POP RIVET Qty. 4 Bar.code 1863 Condition NEW	
22	M.OUT 2277 # 3 Y/ref	24/09/18	ATIS 4019 ATIS	P/N 189-139 S/N 7364587470 MOLDING CABIN DOOR (BULB TY Qty. 1 Bar.code 1767 Condition NEW	
23	M.OUT 2282 # 1 Y/ref	25/09/18	ATIS 4021 ATIS	P/N AN4-35A S/N ATIS-PO2275 BOLT Qty. 1 Bar.code 1869 Condition NEW	
24	M.OUT 2284 # 1 Y/ref	25/09/18	ATIS 4022 ATIS	P/N MS21042-4 S/N 1018688 NUT Qty. 3 Bar.code 1870 Condition NEW	
	PO 2360 # 1 Y/ref Q-2271	25/09/18	PARTEXCHAN 4007 ATIS	P/N K62232-00 S/N RH AFT RISER Qty. 1 Bar.code Condition NEW	4
	PO 2360 # 2 Y/ref Q-2271	25/09/18	PARTEXCHAN 4008 ATIS	P/N K62230-00 S/N RH FORWARD RISER Qty. 1 Bar.code Condition NEW	7
	PO 2360 # 3 Y/ref Q-2271	25/09/18	PARTEXCHAN 4009 ATIS	P/N K62231-00 S/N LH AFT RISER Qty. 1 Bar.code Condition NEW	6
	PO 2360 # 4 Y/ref Q-2271	25/09/18	PARTEXCHAN 4010 ATIS	P/N K35300-00 S/N LH FORWARD RISER Qty. 1 Bar.code Condition NEW	8

COMPONENT HISTORY

ALL DOCUMENTS

WO: 9073

	Ref.	Date / Case#	Origin / Destination	Component / Batch	Aircraft FH	FC
	PO 2360 # 5 Y/ref Q-2271	25/09/18	PARTEXCHAN 4011 ATIS	P/N CS051-2P S/N CLAMP (STACK)	Qty. 2 Bar.code Condition NEW	9
25	M.OUT 2286 # 1 Y/ref	26/09/18	ATIS 4023 ATIS	P/N BT-33-75D S/N 71322 Tensiometer	Qty. 1 Bar.code 16 Condition INS/REP	
26	M.OUT 2287 # 1 Y/ref	26/09/18	ATIS 4024 ATIS	P/N 62701-047 S/N ATIS-PO2268 CABLE, STABILISATOR TRIM AFT	Qty. 1 Bar.code 1865 Condition NEW	
27	M.OUT 2287 # 2 Y/ref	26/09/18	ATIS 3053 ATIS	P/N 452-413 S/N ATIS-PO1562 BEARING OILITE	Qty. 2 Bar.code 1392 Condition NEW	
28	M.OUT 2287 # 3 Y/ref	26/09/18	ATIS 3052 ATIS	P/N 484-747 S/N ATIS-PO1562 SNAP RING	Qty. 1 Bar.code 1390 Condition NEW	
29	M.OUT 2287 # 4 Y/ref	26/09/18	ATIS 3048 ATIS	P/N MS24665-368 S/N ATIS-PO1562 PIN COTTER	Qty. 2 Bar.code 1388 Condition NEW	
30	M.OUT 2287 # 5 Y/ref	26/09/18	ATIS 3050 ATIS	P/N 65246-000 S/N ATIS-PO1562 SHAFT	Qty. 1 Bar.code 1389 Condition NEW	
31	M.OUT 2287 # 6 Y/ref	26/09/18	ATIS 3056 ATIS	P/N 494-097 S/N ATIS-PO1562 SHIM - STABILISATOR TRIM	Qty. 1 Bar.code 1397 Condition NEW	
32	M.OUT 2287 # 7 Y/ref	26/09/18	ATIS 3054 ATIS	P/N 452-418 S/N ATIS-PO1562 BEARING - THRUST (T-1010)	Qty. 1 Bar.code 1393 Condition NEW	
33	M.OUT 2287 # 8 Y/ref	26/09/18	ATIS 3055 ATIS	P/N 63530-000 S/N ATIS-PO1562 BARREL	Qty. 1 Bar.code 1396 Condition NEW	
34	M.OUT 2288 # 1 Y/ref	26/09/18	ATIS 4025 ATIS	P/N 690-623 S/N ATIS-BR538 WASHER	Qty. 1 Bar.code 1871 Condition NEW	
35	M.OUT 2290 # 1 Y/ref	27/09/18	ATIS 4026 ATIS	P/N AN3-4A S/N 23905 BOLT UNDRILLED	Qty. 1 Bar.code 1875 Condition NEW	

COMPONENT HISTORY

ALL DOCUMENTS

WO: 9073

	Ref.	Date / Case#	Origin / Destination	Component / Batch	Aircraft FH FC
36	M.OUT 2290 # 2 Y/ref	27/09/18	ATIS 4027 ATIS	P/N NAS1149F0363P S/N ATIS-BR799 WASHER Qty. 1 Bar.code 1876 Condition NEW	
37	M.OUT 2290 # 3 Y/ref	27/09/18	ATIS 4028 ATIS	P/N MS21042-3 S/N 1006752 NUT Qty. 1 Bar.code 1877 Condition NEW	
38	M.OUT 2290 # 4 Y/ref	27/09/18	ATIS 4058 ATIS	P/N MS21042-3 S/N 1006752 NUT Qty. 2 Bar.code 1898 Condition NEW	
~~39~~	M.OUT 2321 # 1 Y/ref	01/10/18	ATIS 4064 ATIS	P/N BT-33-75D S/N 71322 Tensiometer Qty. 1 Bar.code 16 Condition INS/REP	
40	M.OUT 2334 # 1 Y/ref	02/10/18	ATIS 4072 ATIS	P/N 189-139 S/N 7364587470 MOLDING CABIN DOOR (BULB TY Qty. 1 Bar.code 1767 Condition NEW	
41	M.OUT 2335 # 1 Y/ref	02/10/18	ATIS 4073 ATIS	P/N M3081 S/N P383556 CONTACT POINT Qty. 2 Bar.code 1901 Condition NEW	
42	M.OUT 2336 # 1 Y/ref	02/10/18	ATIS 4074 ATIS	P/N MS24665-132 S/N 1006565 PIN COTTER Qty. 2 Bar.code 1902 Condition NEW	
43	M.OUT 2343 # 1 Y/ref	03/10/18	ATIS 4083 ATIS	P/N MS24665-132 S/N 1006565 PIN COTTER Qty. 4 Bar.code 1907 Condition NEW	
44	M.OUT 2343 # 2 Y/ref	03/10/18	ATIS 4084 ATIS	P/N MS20392-3C13 S/N 0510326000 CLEVIS PIN Qty. 1 Bar.code 1120 Condition NEW	
45	M.OUT 2343 # 3 Y/ref	03/10/18	ATIS 4085 ATIS	P/N MS20392-3C13 S/N 7364731912 CLEVIS PIN Qty. 1 Bar.code 1908 Condition NEW	
46	M.OUT 2352 # 1 Y/ref	04/10/18	ATIS 4097 ATIS	P/N MS28775-012 S/N 4Q06 O'RING Qty. 1 Bar.code 1914 Condition NEW	
47	M.OUT 2352 # 2 Y/ref	04/10/18	ATIS 4098 ATIS	P/N MS28775-114 S/N 1Q11 PACKING Qty. 1 Bar.code 1915 Condition NEW	

COMPONENT HISTORY

ALL DOCUMENTS

WO: 9073

	Ref.	Date / Case#	Origin / Destination	Component / Batch	Aircraft FH FC
48	M.OUT 2352 # 3 Y/ref	04/10/18	ATIS 4099 ATIS	P/N 494-062 S/N ATISBR747 WASHER SEAL Qty. 1 Bar.code 1168 Condition NEW	
49	M.OUT 2352 # 4 Y/ref	04/10/18	ATIS 4100 ATIS	P/N MS28775-113 S/N 1Q11 O'RING Qty. 1 Bar.code 1916 Condition NEW	
	M.REC 2365 # 1 Y/ref	04/10/18	PARTEXCHAN 4007 ATIS	P/N K62232-00 S/N 266332 RH AFT RISER Qty. 1 Bar.code 1924 Condition NEW	
	M.REC 2365 # 2 Y/ref	04/10/18	PARTEXCHAN 4008 ATIS	P/N K62230-00 S/N 265838 RH FORWARD RISER Qty. 1 Bar.code 1925 Condition NEW	
	M.REC 2365 # 3 Y/ref	04/10/18	PARTEXCHAN 4009 ATIS	P/N K62231-00 S/N 264807 LH AFT RISER Qty. 1 Bar.code 1926 Condition NEW	
	M.REC 2365 # 4 Y/ref	04/10/18	PARTEXCHAN 4010 ATIS	P/N K35300-00 S/N 266311 LH FORWARD RISER Qty. 1 Bar.code 1927 Condition NEW	
	M.REC 2365 # 5 Y/ref	04/10/18	PARTEXCHAN 4011 ATIS	P/N CS051-2P S/N ATIS-PO2360-1 CLAMP (STACK) Qty. 1 Bar.code 1928 Condition NEW	
	M.REC 2365 # 6 Y/ref	04/10/18	PARTEXCHAN 4011 ATIS	P/N CS051-2P S/N ATIS-PO2360-2 CLAMP (STACK) Qty. 1 Bar.code 1929 Condition NEW	
50	M.OUT 2353 # 1 Y/ref	04/10/18	ATIS 4101 ATIS	P/N MS24665-132 S/N 1006565 PIN COTTER Qty. 3 Bar.code 1917 Condition NEW	
51	M.OUT 2353 # 2 Y/ref	04/10/18	ATIS 4102 ATIS	P/N NAS1149F0332P S/N AVIALL-7364820396 WASHER Qty. 2 Bar.code 1918 Condition NEW	
	ASS 2368 # 1 Y/ref	05/10/18	4007 ATIS	P/N K62232-00 S/N 266332 RH AFT RISER Qty. 1 Bar.code 1924 Condition NEW	-1
52	M.OUT 2363 # 1 Y/ref	05/10/18	ATIS 4116 ATIS	P/N MS35338-139 S/N ATIS-BR123 WASHER LOCK SPRING Qty. 8 Bar.code 1921 Condition NEW	

COMPONENT HISTORY

ALL DOCUMENTS

WO: 9073

	Ref.	Date / Case#	Origin / Destination	Component / Batch	Aircraft FH FC
53	M.OUT 2363 # 2 Y/ref	05/10/18	ATIS 4117 ATIS	P/N STD1410 S/N 1022168 NUT Qty. 8 Bar.code 1922 Condition NEW	
54 Voir item 11	~~M.OUT 2364 # 1~~ ~~Y/ref~~	~~05/10/18~~	~~ATIS~~ 4119 ATIS	~~P/N 77611~~ S/N ATIS-1063 GASKET EXHAUST Qty. 4 Bar.code 1923 Condition NEW	4 Sorties sur item 11 236 et #1 annulé
	ASS 2369 # 1 Y/ref	05/10/18	4008 ATIS	P/N K62230-00 S/N 265838 RH FORWARD RISER Qty. 1 Bar.code 1925 Condition NEW	-1
	ASS 2370 # 1 Y/ref	05/10/18	4009 ATIS	P/N K62231-00 S/N 264807 LH AFT RISER Qty. 1 Bar.code 1926 Condition NEW	-1
	ASS 2371 # 1 Y/ref	05/10/18	4010 ATIS	P/N K35300-00 S/N 266311 LH FORWARD RISER Qty. 1 Bar.code 1927 Condition NEW	-1
	ASS 2372 # 1 Y/ref	05/10/18	4011 ATIS	P/N CS051-2P S/N ATIS-PO2360-1 CLAMP (STACK) Qty. 1 Bar.code 1928 Condition NEW	-1
	ASS 2373 # 1 Y/ref	05/10/18	4011 ATIS	P/N CS051-2P S/N ATIS-PO2360-2 CLAMP (STACK) Qty. 1 Bar.code 1929 Condition NEW	-1
55	M.OUT 2374 # 1 Y/ref	05/10/18	ATIS 4007 ATIS	P/N K62232-00 S/N 266332 RH AFT RISER Qty. 1 Bar.code 1924 Condition NEW	
56	M.OUT 2375 # 1 Y/ref	05/10/18	ATIS 4008 ATIS	P/N K62230-00 S/N 265838 RH FORWARD RISER Qty. 1 Bar.code 1925 Condition NEW	
57	M.OUT 2376 # 1 Y/ref	05/10/18	ATIS 4009 ATIS	P/N K62231-00 S/N 264807 LH AFT RISER Qty. 1 Bar.code 1926 Condition NEW	
58	M.OUT 2377 # 1 Y/ref	05/10/18	ATIS 4010 ATIS	P/N K35300-00 S/N 266311 LH FORWARD RISER Qty. 1 Bar.code 1927 Condition NEW	
59	M.OUT 2378 # 1 Y/ref	05/10/18	ATIS 4011 ATIS	P/N CS051-2P S/N ATIS-PO2360-1 CLAMP (STACK) Qty. 1 Bar.code 1928 Condition NEW	

COMPONENT HISTORY

ALL DOCUMENTS

WO: 9073

	Ref.	Date / Case#	Origin / Destination	Component / Batch	Aircraft FH FC
60	M.OUT 2379 # 1 Y/ref	05/10/18	ATIS 4011 ATIS	P/N CS051-2P S/N ATIS-PO2360-2 CLAMP (STACK) Qty. 1 Bar.code 1929 Condition NEW	
61	M.OUT 2388 # 1 Y/ref	05/10/18	ATIS 4129 ATIS	P/N AN4-6A S/N ATIS-PO1562 BOLT Qty. 1 Bar.code 1931 Condition NEW	
62	M.OUT 2390 # 1 Y/ref	08/10/18	ATIS 4131 ATIS	P/N 63633-038 S/N 7364771186 HOSE, DUCT CABIN HEAT Qty. 1 Bar.code 1879 Condition NEW	
63	M.OUT 2390 # 2 Y/ref	08/10/18	ATIS 3047 ATIS	P/N 554-859 S/N ATIS-PO1562 CLAMP Qty. 2 Bar.code 1386 Condition NEW	
64	M.OUT 2392 # 1 Y/ref	08/10/18	ATIS 4134 ATIS	P/N MS17826-5 S/N 50321516 NUT - NYLON HEX CASTLE Qty. 1 Bar.code 1728 Condition NEW	
65	M.OUT 2392 # 2 Y/ref	08/10/18	ATIS 4135 ATIS	P/N AN960-516 S/N ATIS-BR799 WASHER Qty. 1 Bar.code 1936 Condition NEW	

END OF REPORT

Southern Cross Aviation www.scross.com I453307 1046156 P/N AA48110-2 Item 1 Qty 12 Ctrl# 450315 Ctrld 1

1. Approving Civil Aviation Authority/Country: FAA / UNITED STATES	2. **AUTHORIZED RELEASE CERTIFICATE** FAA Form 8130-3, AIRWORTHINESS APPROVAL TAG	3. Form Tracking Number: 002584
4. Organization Name and Address:	Aero Accessories, LLC. - 1240 Springwood Church Road - Gibsonville NC 27249 FAA-PMA PQ1206CE YV4R688M	5. Work Order/Contract/Invoice Number: P.O. # P410020 Page 1 of 3

6. Item	7. Description	8. Part Number	9. Quantity	10.Serial Number	11. Status / Work
1	See Block 12	See Block 12	See Block 12	N/A or See Block 12	NEW

12. Remarks

AIRWORTHINESS APPROVAL - ARTICLE
PARTS LISTED ARE NOT CRITICAL COMPONENTS.

Quantity	Description	Part Number	Serial #
300	OIL FILTER 3/4 MALE SHORT	AA48110-2	1-T
500	FILTER	ARB3-5-1	12271701
[redacted]	OIL FILTER 3/4 FEMALE SHORT	AA48108-2	1-N
168	OIL FILTER 3/4 FEMALE SHORT	AA48108-2	1-N
200	OIL FILTER 3/4 FEMALE LONG	AA48109	1-L
100	FILTER	AA2J4-7	1-B
48	3/4-20 THREAD MASSIVE ELECTRODE	URHM40E	00GB
20	3/4-20 THREAD FINE WIRE ELECTRODE	URHB32S	00E7
30	3/4-20 THREAD FINE WIRE ELECTRODE	URHM38S	0065
30	SIX PACK OIL FILTER 3/4 FEM LONG	AA48109 (6 PACK)	1-L
20	SIX PACK OIL FILTER 13/16 FEMALE	AA48103-2 (6 PACK)	1-F

Photocopie effectuée le 13/09/2018
au titre d'un délotissement de 1 pièce(s)
sur un total de 88 pièces
par N.C. de la société ATIS

***** CERTIFIED TRUE COPY *****

13a. Certifies the items identified above were manufactured in conformity to:	14a. [ ] 14 CFR 43.9 Return To Service [ ] Other Regulation Specified in Block 12
[X] Approved design data and are in condition for safe operation. [ ] Non-approved design data specified in Block 12	Certifies that unless otherwise specified in block 12, the work identified in block 11 and described in block 12 was accomplished in accordance with Title 14, Code of Federal Regulations, part 43 and in respect to that work, the items are approved for return to service.
13b. Authorized Signature: Tayler W Phillips	14b. Authorized Signature:
13c. Approval / Authorization No. : 047586858	14c. Approval / Authorization No. :
13d. Name (Typed or Printed) Tayler W. Phillips	14d. Name (Typed or Printed)
13e.Date (dd/mmm/yyyy) 29/Mar/2018	14e.Date (dd/mmm/yyyy)

It is important to understand that the existence of this document alone does not automatically constitue authority to install the aircraft engin/propeller/article.

Where the user/installer performs work in accordance with the national regulations of an airworthiness authority different than the airworthiness authority of the country specified in Bllock1, it is essential that the user/installer ensures that his/her airworthiness authority accepts aircraft engine(s)/propeller(s)/article(s) from the airworthiness authority of the Country specified n Block 1.

Statement in Blocks 13a and 14a do not constituee installation certification. In all cases aircraft maintenance records must contain an installation certification issued in accordance with the national regulations by the user/installer before the aircraft may be flown.

1

1. Approving Civil Aviation Authority/Country: FAA/United States	2. **AUTHORIZED RELEASE CERTIFICATE** FAA Form 8130-3, AIRWORTHINESS APPROVAL TAG	3. Form Tracking Number: 7364495152 1000000033537473

4. Organization Name and Address: AVIALL SERVICES INC.
2750 REGENT BLVD
DFW AIRPORT, TX 75261

5. Work Order/Contract/Invoice Number: 634

6. Item:	7. Description:	8. Part Number:	9. Quantity:	10. Serial Number:	11. Status/Work:
1.	GASKET-ANNULAR-1.000 ID	06E19769-1.00	50	N/A	NEW

12. Remarks:

MQ
DER
1504

THE PRODUCT(S)/ARTICLE(S) SHIPPED UNDER THIS APPROVAL WERE PRODUCED BY LYCOMING ENGINES.

Photocopie effectuée le 13/09/2018
au titre d'un délotissement de 1 pièce(s)
sur un total de 50 pièces
par Nea de la société ATIS

13a. Certifies the items identified above were manufactured in conformity to:

☒ Approved design data and are in a condition for safe operation.

☐ Non-approved design data specified in Block 12.

~~14a. ☐ 14 CFR 43.9 Return to Service ☐ Other regulation specified in Block 12 Certifies that unless otherwise specified in Block 12, the work identified in Block 11 and described in Block 12 was accomplished in accordance with Title 14, Code of Federal Regulations, part 43 and in respect to that work, the items are approved for return to service.~~

13b. Authorized Signature: Mark A. Dumont	13c. Approval/Authorization No.: 225678718	~~14b. Authorized Signature:~~	~~14c. Approval/Certificate No.:~~
13d. Name (Typed or Printed): MARK A. DUMONT	13e. Date (dd/mmm/yyyy): 04 AUG 2017	~~14d. Name (Typed or Printed):~~	~~14e. Date (dd/mmm/yyyy):~~

User/Installer Responsibilities

It is important to understand that the existence of this document alone does not automatically constitute authority to install the aircraft engine/propeller/article. Where the user/installer performs work in accordance with the national regulations of an airworthiness authority different than the airworthiness authority of the country specified in Block 1, it is essential that the user/installer ensures that his/her airworthiness authority accepts aircraft engine(s)propeller(s)/ article(s) from the airworthiness authority of the country specified in the Block 1. Statements in Blocks 13a and 14a do not constitute installation certification. In all cases, aircraft maintenance records must contain an installation certification issued in accordance with the national regulations by the user/installer before the aircraft may be flown.

AVIALL - TRUE CERTIFIED COPY - 08/04/2017 - DALLMON - 7364495152

1. Approving Civil Aviation Authority/Country: FAA/UNITED STATES

2. **AUTHORIZED RELEASE CERTIFICATE**
FAA FORM 8130-3, AIRWORTHINESS APPROVAL TAG

3. Form Tracking Number: MS-480840

4. Organization Name and Address:
LYCOMING ENGINES
652 OLIVER STREET
WILLIAMSPORT, PA 17701
PRODUCTION CERTIFICATE #3

5. Work Order/Contract/Invoice Number: 150224/4574358

6. Item:	7. Description:	8. Part Number:	9. Quantity:	10. Serial Number:	11. Status/Work:
1.1	SEAL-CRANKSHAFT-OIL	LW-15628	00070	N/A	NEW

12. Remarks: AIRWORTHINESS APPROVAL PARTS
AVIALL INC
United States

13a. Certifies the items identified above were manufactured in conformity to:
X Approved design data and are in a condition for safe operation.
_ Non-approved design data specified in Block 12.

14a. _14CFR 43.9 _Return to Service _Other regulation specified in Block 12
Certifies that unless otherwise specified in Block 12, the work identified in block 11 and described in Block 12 was accomplished in accordance with Title 14 Code of Federal Regulations, Part 43 and in respect to that work, the items are approved for return to service

13b. Authorized Signature: John F. Dabback
13c. Approval/Authorization No.: ODA830878NE
14b. Authorized Signature:
14c. Approval/Certificate:
13d. Name (Typed or Printed): J. DABBACK
13e. Date(dd/mm/yyyy): 03 MAR 2017
14d. Name (Typed or Printed):
14e. Date(dd/mm/yyyy):

User/Installer Responsibilities

It is important to understand that the existence of this document alone does not automatically constitute authority to install aircraft engine/propeller/article.

Where the user/installer performs work in accordance with the national regulations of an airworthiness authority different than the airworthiness authority of the country specified in Block 1, it is essential that the user/installer ensures that his/her airworthiness authority accepts aircraft engine/propeller/article from the airworthiness authority of the country specified in Block 1.

Statements in Blocks 13a and 14a do not constitute installation certification. In all cases, aircraft maintenance records must contain an installation certification issued in accordance with the national regulations by the user/installer before the aircraft may be flown.

FAA Form 8130-3 (02-14) *Installer must cross check eligibility with applicable technical data.

---

1. Approving Civil Aviation Authority/Country: FAA/UNITED STATES

2. **AUTHORIZED RELEASE CERTIFICATE**
FAA FORM 8130-3, AIRWORTHINESS APPROVAL TAG

3. Form Tracking Number: MS-480840

4. Organization Name and Address:
LYCOMING ENGINES
652 OLIVER STREET
WILLIAMSPORT, PA 17701
PRODUCTION CERTIFICATE #3

5. Work Order/Contract/Invoice Number: 150224/4574358

6. Item:	7. Description:	8. Part Number:	9. Quantity:	10. Serial Number:	11. Status/Work:
2.1	PLUG-PISTON PIN	72198	00250	N/A	NEW

12. Remarks: AIRWORTHINESS APPROVAL PARTS
AVIALL INC
United States

13a. Certifies the items identified above were manufactured in conformity to:
X Approved design data and are in a condition for safe operation.
_ Non-approved design data specified in Block 12.

14a. _14CFR 43.9 _Return to Service _Other regulation specified in Block 12
Certifies that unless otherwise specified in Block 12, the work identified in block 11 and described in Block 12 was accomplished in accordance with Title 14 Code of Federal Regulations, Part 43 and in respect to that work, the items are approved for return to service

13b. Authorized Signature: John F. Dabback
13c. Approval/Authorization No.: ODA830878NE
14b. Authorized Signature:
14c. Approval/Certificate:
13d. Name (Typed or Printed): J. DABBACK
13e. Date(dd/mm/yyyy): 03 MAR 2017
14d. Name (Typed or Printed):
14e. Date(dd/mm/yyyy):

User/Installer Responsibilities

It is important to understand that the existence of this document alone does not automatically constitute authority to install aircraft engine/propeller/article.

Where the user/installer performs work in accordance with the national regulations of an airworthiness authority different than the airworthiness authority of the country specified in Block 1, it is essential that the user/installer ensures that his/her airworthiness authority accepts aircraft engine/propeller/article from the airworthiness authority of the country specified in Block 1.

Statements in Blocks 13a and 14a do not constitute installation certification. In all cases, aircraft maintenance records must contain an installation certification issued in accordance with the national regulations by the user/installer before the aircraft may be flown.

FAA Form 8130-3 (02-14) *Installer must cross check eligibility with applicable technical data.

---

1. Approving Civil Aviation Authority/Country: FAA/UNITED STATES

2. **AUTHORIZED RELEASE CERTIFICATE**
FAA FORM 8130-3, AIRWORTHINESS APPROVAL TAG

3. Form Tracking Number: MS-480840

4. Organization Name and Address:
LYCOMING ENGINES
652 OLIVER STREET
WILLIAMSPORT, PA 17701
PRODUCTION CERTIFICATE #3

5. Work Order/Contract/Invoice Number: 150224/4574358

6. Item:	7. Description:	8. Part Number:	9. Quantity:	10. Serial Number:	11. Status/Work:
3.1	GASKET-ANNULAR-1.000 ID	06619769-1.0D	00700	N/A	NEW

12. Remarks: AIRWORTHINESS APPROVAL PARTS
AVIALL INC
United States

13a. Certifies the items identified above were manufactured in conformity to:
X Approved design data and are in a condition for safe operation.
_ Non-approved design data specified in Block 12.

14a. _14CFR 43.9 _Return to Service _Other regulation specified in Block 12
Certifies that unless otherwise specified in Block 12, the work identified in block 11 and described in Block 12 was accomplished in accordance with Title 14 Code of Federal Regulations, Part 43 and in respect to that work, the items are approved for return to service

13b. Authorized Signature: John F. Dabback
13c. Approval/Authorization No.: ODA830878NE
14b. Authorized Signature:
14c. Approval/Certificate:
13d. Name (Typed or Printed): J. DABBACK
13e. Date(dd/mm/yyyy): 03 MAR 2017
14d. Name (Typed or Printed):
14e. Date(dd/mm/yyyy):

User/Installer Responsibilities

It is important to understand that the existence of this document alone does not automatically constitute authority to install aircraft engine/propeller/article.

Where the user/installer performs work in accordance with the national regulations of an airworthiness authority different than the airworthiness authority of the country specified in Block 1, it is essential that the user/installer ensures that his/her airworthiness authority accepts aircraft engine/propeller/article from the airworthiness authority of the country specified in Block 1.

Statements in Blocks 13a and 14a do not constitute installation certification. In all cases, aircraft maintenance records must contain an installation certification issued in accordance with the national regulations by the user/installer before the aircraft may be flown.

FAA Form 8130-3 (02-14) *Installer must cross check eligibility with applicable technical data.

---

1. Approving Civil Aviation Authority/Country: FAA/UNITED STATES

2. **AUTHORIZED RELEASE CERTIFICATE**
FAA FORM 8130-3, AIRWORTHINESS APPROVAL TAG

3. Form Tracking Number: MS-480840

4. Organization Name and Address:
LYCOMING ENGINES
652 OLIVER STREET
WILLIAMSPORT, PA 17701
PRODUCTION CERTIFICATE #3

5. Work Order/Contract/Invoice Number: 150224/4574358

6. Item:	7. Description:	8. Part Number:	9. Quantity:	10. Serial Number:	11. Status/Work:
4.1	BUSHING-ENGINE SUPPORT	71032	00480	N/A	NEW

12. Remarks: AIRWORTHINESS APPROVAL PARTS
AVIALL INC
United States

13a. Certifies the items identified above were manufactured in conformity to:
X Approved design data and are in a condition for safe operation.
_ Non-approved design data specified in Block 12.

14a. _14CFR 43.9 _Return to Service _Other regulation specified in Block 12
Certifies that unless otherwise specified in Block 12, the work identified in block 11 and described in Block 12 was accomplished in accordance with Title 14 Code of Federal Regulations, Part 43 and in respect to that work, the items are approved for return to service

13b. Authorized Signature: John F. Dabback
13c. Approval/Authorization No.: ODA830878NE
14b. Authorized Signature:
14c. Approval/Certificate:
13d. Name (Typed or Printed): J. DABBACK
13e. Date(dd/mm/yyyy): 03 MAR 2017
14d. Name (Typed or Printed):
14e. Date(dd/mm/yyyy):

User/Installer Responsibilities

It is important to understand that the existence of this document alone does not automatically constitute authority to install aircraft engine/propeller/article.

Where the user/installer performs work in accordance with the national regulations of an airworthiness authority different than the airworthiness authority of the country specified in Block 1, it is essential that the user/installer ensures that his/her airworthiness authority accepts aircraft engine/propeller/article from the airworthiness authority of the country specified in Block 1.

Statements in Blocks 13a and 14a do not constitute installation certification. In all cases, aircraft maintenance records must contain an installation certification issued in accordance with the national regulations by the user/installer before the aircraft may be flown.

FAA Form 8130-3 (02-14) *Installer must cross check eligibility with applicable technical data.

1. Approving Civil Aviation Authority/Country: FAA / UNITED STATES	2. **AUTHORIZED RELEASE CERTIFICATE** FAA Form 8130-3, AIRWORTHINESS APPROVAL TAG	3. Form Tracking Number: 000406
4. Organization Name and Address:	Aero Accessories, LLC. - 1240 Springwood Church Road - Gibsonville NC 27249 FAA-PMA PQ1206CE YV4R688M	5. Work Order/Contract/Invoice Number: P.O. # 45782423 Page 1 of 1

6. Item	7. Description	8. Part Number	9. Quantity	10.Serial Number	11. Status / Work
1	See Block 12	ARB3-5-1	400	10261701	NEW

12. Remarks

AIRWORTHINESS APPROVAL - ARTICLE
PARTS LISTED ARE NOT CRITICAL COMPONENTS.

Quantity	Description	Part Number	Serial #
3600	FILTER	ARB3-5-1	10021702
400	FILTER	ARB3-5-1	10261701

Photocopie effectuée le 19/09/2018
au titre d'un délotissement de 1 pièce(s)
sur un total de 400 pièces
par WLT de la société ATIS

13a. Certifies the items identified above were manufactured in conformity to:

[X] Approved design data and are in condition for safe operation.

[ ] Non-approved design data specified in Block 12

14a. [ ] 14.CFR 43.9 Return To Service [ ] Other Regulation Specified in Block 12

Certifies that unless otherwise specified in block 12 the work cited in block 11 and described in block 12 was accomplished in accordance with Title 14 Code of Federal Regulations part 43 and in respect to that work the items are approved for return to service.

13b. Authorized Signature: Tayler W Phillips	13c. Approval / Authorization No. : 047586858	14b. Authorized Signature	14c. Approval / Authorization No.:
13d. Name (Typed or Printed) Tayler W. Phillips	13e.Date (dd/mmm/yyyy) 19/Jan/2018	14d. Name (Typed or Printed)	14e. Date (dd/mmm/yyyy)

It is important to understand that the existence of this document alone does not automatically constitue authority to install the aircraft engin/propeller/article.

Where the user/installer performs work in accordance with the national regulations of an airworthiness authority different than the airworthiness authority of the country specified in Block1, it is essential that the user/installer ensures that his/her airworthiness authority accepts aircraft engine(s)/propeller(s)/article(s) from the airworthiness authority of the Country specified n Block 1.

Statement in Blocks 13a and 14a do not constituee installation certification. In all cases aircraft maintenance records must contain an installation certification issued in accordance with the national regulations by the user/installer before the aircraft may be flown.

AVIALL - TRUE CERTIFIED COPY - 02/07/2018 - JBUSTILLOS - 7364763315

3

TEMPEST AERO GROUP

Shipping List 000406
Customer No 000066

Sales Order Shipper

Ship to : AVIALL SERVICES INC.
2750 REGENT BLVD
DFW AIRPORT TX 75261
United States

Sold to : AVIALL SERVICES INC.
PO BOX 842257
DALLAS TX 75261
United States

Ship Date	Customer PO	# of Boxes	Weight	Ship VIA	Bill of Lading	F O B
01/19/2018	45782423	0	0.00000	Federal Express	9622042320000510448 9	OUR PLANT

Item	Fac / Part / Rev / Description / Details	Order Quantity	Ship Quantity
000001	ARO Sales Order 000298-00 Item 002 ARB3-5-1 Rev A U/M EA FILTER Lot/SN(s) 10021702 Qty 3600.00000 10261701 400.00000	4,000.00000	4,000.00000

8130-3 FORM REQUIRED
SHIP FEDEX GROUND # 075268572

FED EX 962204232000051044890041461056521 2

ITEM ARB3-5-1=4K

BATCH 7364763315

EPATTERSON
01/26/18

CUSTOMER

AVIALL - TRUE CERTIFIED COPY - 02/07/2018 - JBUSTILLOS - 7364763315

(4)

1. Approving Civil Aviation Authority/Country: FAA/United States	2. **AUTHORIZED RELEASE CERTIFICATE** FAA Form 8130-3, AIRWORTHINESS APPROVAL TAG	3. Form Tracking Number: 4965008
4. Organization Name and Address: Textron Aviation Inc. (PC4) Textron Aviation Inc. 1 Cessna Blvd, Wichita, KS 67215		5. Work Order/Contract/Invoice Number: 2170796

6. Item	7. Description	8. Part Number	9. Quantity	10. Serial Number	11. Status/Work
40	SCREW	MS24693-S58	100	N/A	New

12. Remarks:

AIRWORTHINESS APPROVAL - PARTS.

PO#: 1031812

13a. Certifies the items identified above were manufactured in conformity to:

- [x] Approved design data and are in a condition for safe operation.
- [ ] Non-approved design data specified in Block 12.

13b. Authorized Signature:	13c. Approval/Authorization No.:	[redacted]
Daniel P. Beat	ODA-100129-CE	
13d. Name (Typed or Printed): DANIEL P. BEAT	13e. Date (dd/mmm/yyyy): 26/Feb/2016	[redacted]

User/Installer Responsibilities

It is important to understand that the existence of this document alone does not automatically constitute authority to install the aircraft engine propeller/article.

Where the user/installer performs work in accordance with the national regulations of an airworthiness authority different than the airworthiness authority of the country specified in Block 1, it is essential that the user/installer ensures that his/her airworthiness authority accepts aircraft engine(s) propeller(s) or article(s) from the airworthiness authority of the country specified in Block 1.

Statements in Blocks 13a and 14a do not constitute installation certification. In all cases, aircraft maintenance records must contain an installation certification issued in accordance with the national regulations by the user/installer before the aircraft may be flown.

FAA Form 8130-3 (02-14) NSN: 9052-00-012-9005

ATIS OE
FR.145.566
DDU

Page 1 of 1

Photocopie effectuée le 20/05/18
au titre d'un délotissement de 6 pièce(s)
sur un total de 100 pièces
par _____ de la société ATIS

1. Authorizing Civil Aviation Authority/Country: FAA/United States	2. **AUTHORIZED RELEASE CERTIFICATE** FAA Form 8130-3, AIRWORTHINESS APPROVAL TAG	3. Form Tracking Number: 7364883020 1000000044116958

4. Organization Name and Address:	5. Work Order/Contract/Invoice Number:
AVIALL SERVICES INC. 2750 REGENT BLVD DFW AIRPORT, TX 75261	1773

6. Item:	7. Description:	8. Part Number:	9. Quantity:	10. Serial Number:	11. Status/Work:
1.	PULLEY ASSY	481-799	4	N/A	NEW

12. Remarks:

MQ
JOS
1312

THE PRODUCT(S)/ARTICLE(S) SHIPPED UNDER THIS APPROVAL WERE PRODUCED BY PIPER AIRCRAFT, INC..

ATIS OE
FR.145.566
DDU

13a. Certifies the items identified above were manufactured in conformity to:		14a. ☐ 14 CFR 43.9 Return to Service ☐ Other regulation specified in Block 12 Certifies that unless otherwise specified in Block 12, the work identified in Block 11 and described in Block 12 was accomplished in accordance with Title 14, Code of Federal Regulations, part 43 and in respect to that work, the items are approved for return to service.	
☒ Approved design data and are in a condition for safe operation. ☐ Non-approved design data specified in Block 12.			
13b. Authorized Signature:	13c. Approval/Authorization No.: 466371619	14b. Authorized Signature:	14c. Approval/Certificate No.:
13d. Name (Typed or Printed): Mirza Baig	13e. Date (dd/mmm/yyyy): 16 JUL 2018	14d. Name (Typed or Printed):	14e. Date (dd/mmm/yyyy):

User/Installer Responsibilities

It is important to understand that the existence of this document alone does not automatically constitute authority to install the aircraft engine/propeller/article. Where the user/installer performs work in accordance with the national regulations of an airworthiness authority different than the airworthiness authority of the country specified in Block 1, it is essential that the user/installer ensures that his/her airworthiness authority accepts aircraft engine(s)propeller(s)/ article(s) from the airworthiness authority of the country specified in the Block 1. Statements in Blocks 13a and 14a do not constitute installation certification. In all cases, aircraft maintenance records must contain an installation certification issued in accordance with the national regulations by the user/installer before the aircraft may be flown.

1. Approving Civil Aviation Authority/Country: FAA/UNITED STATES	2. **AUTHORIZED RELEASE CERTIFICATE** **FAA Form 8130-3, AIRWORTHINESS APPROVAL TAG**	3. Form Tracking Number: ST0922320
4. Organization Name and Address: Piper Aircraft, Inc. 2926 Piper Drive Vero Beach, FL 32960 USA	**PC 206**	5. Work Order / Contract / Invoice Number: ST0922320 / 210008000 / SH0134918 Page 1 of 1

6. Item:	7. Description:	8. Part Number:	9. Quantity:	10. Serial Number:	11. Status/Work:
10	PULLEY ASSY	481-799	50	N/A	NEW

12. Remarks: Airworthiness Approval

13a. Certifies the items identified above were manufactured in conformity to:

[X] Approved design data and are in condition for safe operation.

[ ] Non-approved design data specified in Block 12.

14a. [ ] 14 CFR 43.9 Return to Service [ ] Other regulation specified in Block 12

Certifies that unless otherwise specified in Block 12, the work identified in Block and described in Block 12 was accomplished in accordance with Title 14, Code of Federal Regulations, part 43 and in respect to that work, the items are approved for return to service.

13b. Authorized Signature:	13c. Approval/Authorization No: PC206	14b. Authorized Signature:	14c. Approval/Certificate No.:
13d. Name (Typed or Printed): Wilson, James	13e. Date (dd/mmm/yyyy): 08/Jun/2018	14d. Name (Typed or Printed):	14e. Date (dd/mmm/yyyy):

User/Installer Responsibilities

It is important to understand that the existence of this document alone does not automatically constitute authority to install the aircraft engine/propeller/article.

Where the user/installer performs work in accordance with the national regulations of an airworthiness authority different than the airworthiness authority of the country specified in Block 1, it is essential that the user/installer ensures that his/her airworthiness authority accepts aircraft engine(s)/propeller(s)/article(s) from the airworthiness authority of the country specified in Block 1.

Statements in Blocks 13a and 14a do not constitute installation certification. In all cases, aircraft maintenance records must contain an installation certification issued in accordance with the national regulations by the user/installer before the aircraft may be flown.

AVIALL - TRUE CERTIFIED COPY - 07/16/2018 - JEFLORES - 7364883020

2-9

1160 MUSTANG DR. SUITE 300
DFW AIRPORT, TX 75261
TEL: (817) 328-6600 FAX (972) 456-1015
WWW.AEROGLEN.COM
CAGE CODE 9V172
ISO9001 / AS9100 / AS9120 REGISTERED
PRI CERTIFICATION: 14-2127, 14-2128R

AERO-GLEN INTERNATIONAL LLC
COMMITMENT | EXECUTION | RESULTS

PACKING SLIP

Print Date : Feb-08-2018 4:06 PM | Printed By : RHAY Print No. : 3

No. 112566 Pg:1/2

Ship To : [1]	For : Account No. [AVIALL-DALLA]
AVIALL CENTRAL WAREHOUSE Attn: RECEIVING DEPT. 2750 REGENT BOULEVARD DFW Airport, TX 75261 UNITED STATES Tel. : 972-586-1994	AVIALL Attn: MICHELLE ZHONG, BUYER 2700 Regent Blvd DFW Airport, TX 75261 UNITED STATES Tel. : 972-586-1994

S.O. No.	:075345	Our Ref	:	Domestic AW :	
Cust P.O.	:0045799975	Your Ref	:DROP OFF	Int'l AWB :	
Picked On	:Jan-05-2018	Spec Inst	:	Origin :	
Shipped On	:Jan-08-2018	Contract	:	Transpor :	
Ship Via	:DROP OFF	Lic No.	:	Nationall :	
F.O.B.	:DESTINATION	Expires	:	Trip/Flig :	
Terms	:NET 30				
Our Contact	:MERLE LANGTON				

Line	P/N & Description	Qty	Ordered	Qty Shipped	Back Orders	Packaging
10	MS20220-1 PULLEY GROOVE UID380636 Note: PULLEY: GROOVE - PKG 1 PER LOT #: 30954 MFG: RALMARK CAGE CODE: 25337 Country Of Origin:USA	ND3	150.00	90.00 EA	60.00	
10	MS20220-1 PULLEY GROOVE UID395603 Rev: F Note: PULLEY: GROOVE - PKG 1 PER LOT #: 33022 REV: F MFG: RALMARK CAGE CODE: 25337 MATL TYPE: MULTIPLE Country Of Origin:USA	ND3		60.00 EA	0.00	

ITEM MS20220-1=28

BATCH 7364777787

BHORTON
02/12/18

UNLESS NOTED ON THE FACE HEREOF, ANY AND ALL MATERIALS/PARTS SUPPLIED ON THIS S.O./P.O. MAY NOT BE DFARS 252.22-7014 ALT. 1 COMPLIANT. AERO-GLEN, INTL., GRAPEVINE, TX., USA, WILL NOT BE HELD IN VIOLATION OF THE DFARS/SPECIALTY

Copyright (c) PENTAGON2000 Software, Inc.
Ser #:[2000.21078] Ver 9.00.03 Build 88

CUSTOMER COPY

AVIALL - TRUE CERTIFIED COPY - 07/16/2018 - DFULCHER - 7364777787

AERO-GLEN INTERNATIONAL LLC
COMMITMENT | EXECUTION | RESULTS

1160 MUSTANG DR. SUITE 300
DFW AIRPORT, TX 75261
TEL: (817) 328-6600 FAX (972) 456-1015
WWW.AEROGLEN.COM
CAGE CODE 9V172
ISO9001 / AS9100 / AS9120 REGISTERED
PRI CERTIFICATION: 14-2127, 14-2128R

CERTIFICATE OF CONFORMANCE

Print Date : Feb-08-2018 4:06 PM

Printed By : RHAY Print No. : 4

No. : 112566 Pg: 1/2

Sold To : Account No. [AVIALL-DALLA]	Shipped To :
AVIALL Attn: Email invoce to apinvoices@aviall.com, ACCOUNTS PAYABLE 2700 Regent Blvd DFW Airport, TX 75261 UNITED STATES Tel. : 972-586-1426	AVIALL CENTRAL WAREHOUSE Attn: RECEIVING DEPT. 2750 REGENT BOULEVARD DFW Airport, TX 75261 UNITED STATES Tel. : 972-586-1994

S.O. No.	:075345	Our Ref	:	Domestic AW:	
Customer P.	:0045799975	Your Ref	:DROP OFF	Int'l AWB:	
Issued Date	:Dec-28-2017	Spec Inst	:	Origin	:
		Contract	:	Transpor:	
Ship Via	:DROP OFF	License No.	:	Nationall:	
F.O.B.	:DESTINATION	Expires	:	Trip/Flig :	
Shipped Dat	:Jan-08-201	Terms	: NET 30		
Our Contact	:MERLE LANGTON				

Line	P/N & Description	Code	Qty Ordered	Shipped	Unit Sell Price	Amount
10	MS20220-1 PULLEY GROOVE Country Of Origin:USA UID#380636 Pick Ticket / Packing Slip No. : 112566 Note: PULLEY: GROOVE - PKG 1 PER LOT #: 30954 MFG: RALMARK CAGE CODE: 25337	ND3	150.00EA	90.00 (Qty. Back 60.00)		
10	MS20220-1 PULLEY GROOVE Country Of Origin:USA UID#395603 Pick Ticket / Packing Slip No. : 112566 Rev: F Note: PULLEY: GROOVE - PKG 1 PER LOT #: 33022 REV: F MFG: RALMARK CAGE CODE: 25337	ND3		60.00 (Qty. Back 0.00)		

THIS IS TO CERTIFY THAT THE MATERIAL(S) FORWARDED TO YOU MEET ALL THE PO, DRAWING, CHEMICAL AND PHYSICAL REQUIREMENTS AND FREE OF ANY FOREIGN OBJECT DEBRIS. AERO-GLEN, INTL. DISCLAIMS ANY RESPONSIBILITY FOR ALL MANUFACTURING OR ANY FUNCTIONAL DEFECTS AND HEREBY LIMITS EXPRESSED OR IMPLIED WARRANTIES TO LIABILITY FOR THE COST OF REPLACING THE MATERIAL OR REFUNDING THE INVOICE VALUE OF MATERIAL, SO ACCEPTING DELIVERY OF THIS MATERIAL ACKNOWLEDGES AWARENESS OF SUCH LIMITATION OF LIABILITY. PRODUCTS HAVE NOT BEEN INTRODUCED TO MERCURY CONTAMINATION WHILE AT OUR FACILITY.
THE COMMODITIES SOLD BY AERO-GLEN, INTL MUST BE EXPORTED FROM THE UNITED STATES IN ACCORDANCE WITH U.S. LAWS. ANY DIVERSION CONTRARY TO U.S. LAW IS PROHIBITED. ANY OR ALL MATERIALS/PARTS SUPPLIED ON THIS S.O./P.O. SHALL BE DFARS 252.225-7014 ALTERNATE 1 COMPLIANT AS NOTED ON A LINE ITEM BASIS.

Continued on next page

Copyright (c) PENTAGON 2000 Software, Inc.
Ser #:[2000.21078] Ver 9.00.03 Build 88

ORIGINAL (COPY.)

AVIALL - TRUE CERTIFIED COPY - 07/16/2018 - DFULCHER - 7364777787

6-3

1160 MUSTANG DR. SUITE 300
DFW AIRPORT, TX 75261
TEL: (817) 328-6600 FAX (972) 456-1015
WWW.AEROGLEN.COM
CAGE CODE 9V172

ISO9001 / AS9100 / AS9120 REGISTERED
PRI CERTIFICATION: 14-2127, 14-2128R

AERO-GLEN INTERNATIONAL LLC
COMMITMENT | EXECUTION | RESULTS

CERTIFICATE OF CONFORMANCE

Pick Ticket No. 112566 Page:2/2

Your Ref : DROP OFF

Line	P/N & Description	Cnd	Qty Ordered	Shipped	Unit Sell Price	Amount
	MATL TYPE: MULTIPLE					

THIS IS TO CERTIFY THAT THE MATERIAL(S) FORWARDED TO YOU MEET ALL THE PO, DRAWING, CHEMICAL AND PHYSICAL REQUIREMENTS AND FREE OF ANY FOREIGN OBJECT DEBRIS. AERO-GLEN, INTL. DISCLAIMS ANY RESPONSIBILITY FOR ALL MANUFACTURING OR ANY FUNCTIONAL DEFECTS AND HEREBY LIMITS EXPRESSED OR IMPLIED WARRANTIES TO LIABILITY FOR THE COST OF REPLACING THE MATERIAL OR REFUNDING THE INVOICE VALUE OF MATERIAL, SO ACCEPTING DELIVERY OF THIS MATERIAL ACKNOWLEDGES AWARENESS OF SUCH LIMITATION OF LIABILITY. PRODUCTS HAVE NOT BEEN INTRODUCED TO MERCURY CONTAMINATION WHILE AT OUR FACILITY.
THE COMMODITIES SOLD BY AERO-GLEN, INTL MUST BE EXPORTED FROM THE UNITED STATES IN ACCORDANCE WITH U.S. EXPORT LAWS. ANY DIVERSION CONTRARY TO U.S. LAW IS PROHIBITED. ANY OR ALL MATERIALS/PARTS SUPPLIED ON THIS S.O./P.O. SHALL BE DFARS 252.225-7014 ALTERNATE 1 COMPLIANT AS NOTED ON A LINE ITEM BASIS.

TYSON KAY, V.P.

Copyright (c) PENTAGON 2000 Software, Inc.
Ser #[2000.21078] Ver 9.00.03 Build 38

ORIGINAL (COPY.)

AVIALL - TRUE CERTIFIED COPY - 07/16/2018 - DFULCHER - 7364777787

6-4

1160 MUSTANG DR. SUITE 300
DFW AIRPORT, TX 75261
TEL: (817) 328-6600 FAX (972) 456-1015
WWW.AEROGLEN.COM
CAGE CODE 9V172
ISO9001 / AS9100 / AS9120 REGISTERED
PRI CERTIFICATION: 14-2127, 14-2128R

AERO-GLEN INTERNATIONAL LLC
COMMITMENT | EXECUTION | RESULTS

PACKING SLIP

Pick Ticket No. 112566 Page:2/2

Your Ref : DROP OFF

Line	P/N & Description	Cn	Ordered	Qty Shipped	Back Order	Packaging
	MATERIAL REQUIREMENT. THE COMMODITIES SOLD BY AERO-GLEN, INTL., MUST BE EXPORTED FROM THE UNITED STATES IN ACCORDANCE WITH ALL U.S. EXPORT LAWS. ANY DIVERSION CONTRARY TO U.S. LAW IS PROHIBITED.					

Copyright (c) PENTAGON 2000 Software, Inc.
Ser #:[2000 21078] Ver 9.00.03 Build 88

CUSTOMER COPY

AVIALL - TRUE CERTIFIED COPY - 07/16/2018 - DFULCHER - 7364777787

6-5

RALMARK COMPANY

83 E. Luzerne Avenue - Larksville
P.O. Box 1507 - Kingston, PA 18704-0507 U.S.A.
Phone: 570-288-9331 Fax: 570-288-0902

Shipping List

Number: 125829 Date: 12/28/2017
Customer PO: 041413

Sold To: AERO-GLEN INTERNATIONAL, LLC
PO BOX 878
GRAPEVINE, TX 76099-0878
USA

Ship To: AERO-GLEN INTERNATIONAL, LLC
1160 MUSTANG DR.
SUITE 300, DFW INT'L. AIRPORT
DALLAS, TX 75261
USA

Buyer: MERLE LANGTON
Ph: 817-328-6600 Fax: 972-456-1015 Ph: 817-328-6600 Fax: 972-456-1015

Customer #	SO	Ship Via	Weight	# of Boxes	Bill of Lading #	F O B
2959	25209	FEDEX GND CLLT	21	1	7710 9969 3649	EXW-LARKSVILLE, PA USA

Item	Description	Order Quantity	Ship Quantity
1	Ralmark Part #: MS20220-1 Rev: F/A Cust PO Item: 001 U/M: ea PULLEY, GROOVE PER MIL-DTL-7034F AND MIL-DTL-7034/2A MADE IN USA LOT: 33022 LUBE 10/17/17 QTY: 250	250	250
	DEC 28 2017		

THESE MATERIALS WERE PRODUCED IN COMPLIANCE WITH THE FAIR LABOR ACT OF 1938, AS AMENDED

AVIALL - TRUE CERTIFIED COPY - 07/16/2018 - DFULCHER - 7364777787

6-6

RALMARK
COMPANY

83 E. Luzerne Avenue - Larksville
P.O. Box 1507 - Kingston, PA 18704-0507 U.S.A.
Phone: 570-288-9331 Fax: 570-288-0902

Certificate Of Conformance

Number: 125829 Date: 12/28/2017
Customer PO: 041413

Sold To: AERO-GLEN INTERNATIONAL, LLC
PO BOX 876

GRAPEVINE, TX 76099-0876
USA

Ship To: AERO-GLEN INTERNATIONAL, LLC
1160 MUSTANG DR.
SUITE 300, DFW INT'L. AIRPORT
DALLAS, TX 75261
USA

Buyer: MERLE LANGTON
Ph: 817-328-6600 EXT: Fax: 972-456-1015 Ph: 817-328-6600 Fax: 972-456-1015

Customer #	SO	Ship Via	Weight	# of Boxes	Bill of Lading #	F O B
2959	25209	FEDEX GND CLLT	21	1	7710 9968 3848	EXW - LARKSVILLE, PA USA

Item	Description	Order Quantity	Ship Quantity
1	Ralmark Part #: MS2022D-1 Rev: F/A Cust PO Item: 001 U/M: ea PULLEY, GROOVE PER MIL-DTL-7034F AND MIL-DTL-7034/2A MADE IN USA LOT: 33022 LUBE 10/17/17 QTY: 250	250	250

We hereby certify that test reports covering the above are on file, subject to your examination, and indicate conformance with applicable specification and/or purchase order requirements.

DEC 28 2017
Date

Eugene Zabiotney, Quality Assurance Technician
Authorized Signature

ATIS OE
FR.145.566
DDU

THESE MATERIALS WERE PRODUCED IN COMPLIANCE WITH THE FAIR LABOR ACT OF 1938, AS AMENDED

AVIALL - TRUE CERTIFIED COPY - 07/16/2018 - DFULCHER - 7364777787

1. Approving Civil Aviation Authority/Country: FAA/United States	2. **AUTHORIZED RELEASE CERTIFICATE** FAA Form 8130-3, AIRWORTHINESS APPROVAL TAG	3. Form Tracking Number: 7364826138 1000000044116961

4. Organization Name and Address:	5. Work Order/Contract/Invoice Number:
AVIALL SERVICES INC. 2750 REGENT BLVD DFW AIRPORT, TX 75261	1773

6. Item:	7. Description:	8. Part Number:	9. Quantity:	10. Serial Number:	11. Status/Work:
1.	PULLEY	481-613	2	N/A	NEW

12. Remarks:

MQ
DAP
1053

ATIS OE
FR.145.505
DDU

THE PRODUCT(S)/ARTICLE(S) SHIPPED UNDER THIS APPROVAL WERE PRODUCED BY PIPER AIRCRAFT, INC..

13a. Certifies the items identified above were manufactured in conformity to:	14a. ☐ 14 CFR 43.9 Return to Service ☐ Other regulation specified in Block 12
☒ Approved design data and are in a condition for safe operation. ☐ Non-approved design data specified in Block 12.	Certifies that unless otherwise specified in Block 12, the work identified in Block 11 and described in Block 12 was accomplished in accordance with Title 14, Code of Federal Regulations, part 43 and in respect to that work, the items are approved for return to service.

13b. Authorized Signature:	13c. Approval/Authorization No.:	14b. Authorized Signature:	14c. Approval/Certificate No.:
Mirza I. Baig	466371619		
13d. Name (Typed or Printed):	**13e. Date (dd/mmm/yyyy):**	**14d. Name (Typed or Printed):**	**14e. Date (dd/mmm/yyyy):**
Mirza Baig	16 JUL 2018		

User/Installer Responsibilities

It is important to understand that the existence of this document alone does not automatically constitute authority to install the aircraft engine/propeller/article. Where the user/installer performs work in accordance with the national regulations of an airworthiness authority different than the airworthiness authority of the country specified in Block 1, it is essential that the user/installer ensures that his/her airworthiness authority accepts aircraft engine(s)propeller(s)/ article(s) from the airworthiness authority of the country specified in the Block 1. Statements in Blocks 13a and 14a do not constitute installation certification. In all cases, aircraft maintenance records must contain an installation certification issued in accordance with the national regulations by the user/installer before the aircraft may be flown.

7-2

1. Approving Civil Aviation Authority/Country: FAA/UNITED STATES	2. **AUTHORIZED RELEASE CERTIFICATE** **FAA Form 8130-3, AIRWORTHINESS APPROVAL TAG**	3. Form Tracking Number: ST0919456
4. Organization Name and Address: Piper Aircraft, Inc. 2926 Piper Drive Vero Beach, FL 32960 USA	PC 206	5. Work Order / Contract / Invoice Number: ST0919456 / 210008000 / SH0127810 Page 1 of 1

6. Item:	7. Description:	8. Part Number:	9. Quantity:	10. Serial Number:	11. Status/Work:
10	PULLEY	481-613	30	N/A	NEW

12. Remarks: Airworthiness Approval

13a. Certifies the items identified above were manufactured in conformity to:

[X] Approved design data and are in condition for safe operation.

[ ] Non-approved design data specified in Block 12.

14a. [ ] 14 CFR 43.9 Return to Service/ [ ] Other regulation specified in Block 12

Certifies that unless otherwise specified in Block 12, the work identified in Block 11 and described in Block 12 was accomplished in accordance with Title 14, Code of/ Federal Regulations, part 43 and in respect to that work, the items are approved for return to service.

13b. Authorized Signature: Carolyn Melton	13c. Approval/Authorization No: PC206	14b. Authorized Signature:	14c. Approval/Certificate No.:
13d. Name (Typed or Printed): Melton, Carolyn	13e. Date (dd/mmm/yyyy): 28/Mar/2018	14d. Name (Typed or Printed):	14e. Date (dd/mmm/yyyy):

User/Installer Responsibilities

It is important to understand that the existence of this document alone does not automatically constitute authority to install the aircraft engine/propeller/article.

Where the user/installer performs work in accordance with the national regulations of an airworthiness authority different than the airworthiness authority of the country specified in Block 1, it is essential that the user/installer ensures that his/her airworthiness authority accepts aircraft engine(s)/propeller(s)/article(s) from the airworthiness authority of the country specified in Block 1.

Statements in Blocks 13a and 14a do not constitute installation certification. In all cases, aircraft maintenance records must contain an installation certification issued in accordance with the national regulations by the user/installer before the aircraft may be flown.

AVIALL - TRUE CERTIFIED COPY 07/16/2018 - DFULCHER 7364826138

Piper

Packing Slip SH0127810 Original
Date 03-28-2018

Sales Order ST0919456
Page 20

210008000 AVIALL CENTRAL WAREHOUSE
2750 REGENT BLVD. DFW AIRPORT, Dallas, TX, 75261, USA

AVIALL CENTRAL WAREHOUSE
2750 REGENT BLVD. DFW AIRPORT
Dallas TX 75261
UNITED STATES OF AMERICA

Customer Order No.	Date	Ship Via	Ship Date	Point of Origin
0045796G46	03-30-2018	Fedex Ground	03-30-2018	Vero Beach, FL 32960 USA

Aircraft S/N :

Line	Order	Item	Order Qty	Unit	Description	Qty Shipped	Backorder	Pl.Rec.Dt.
360	ST0919456	481-613	30.00	ea	PULLEY	30.00		03-02-2018
		HarmC 8483.50.9040 SchB 8483.50.8030 ECCN 9A991.d Shelf Life 0 Country USA						

Shipment Reference : SH0127810 3/28/2018
SHIP FEDEX GRD BILL ACCT 0752-6857-2
FOR FEDEX GRD UNDER 150 LBS PER PACKAGE
AND TOTAL SHIPMENT 400 LBS OR LESS
ALL OTHER PLEASE REFER TO AVIALL
SHIPPING INSTRUCTIONS DATED 05/07/09

ITEM 481-613=PI
BATCH 7364826138

EMARISCAL
04/06/18

Material heron has been made in conformance with all Federal wage and hour laws. The parts listed on this document, were produced and/or supplied under FAA Production Certificate 206. Merchandise shipped according to order cannot be returned without our permission. All claims for damages should be made direct to transportation agency.
Piper Parts Limited Warranty: http://www.piper.com/warranty/

NOTE:
REMIT PAYMENT TO:
Piper Aircraft, Inc.
2926 Piper Drive
Vero Beach, FL 32960-1964

Form No. 012-341 Rev.07/2014

AVIALL - TRUE CERTIFIED COPY - 07/16/2018 - DFULCHER - 7364826138

1160 MUSTANG DR. SUITE 300
DFW AIRPORT, TX 75261
TEL: (817) 328-6600 FAX (972) 456-1015
WWW.AEROGLEN.COM
CAGE CODE 9V172

ISO9001 / AS9100 / AS9120 REGISTERED
PRI CERTIFICATION: 14-2127, 14-2128R

AERO-GLEN INTERNATIONAL LLC
COMMITMENT | EXECUTION | RESULTS

PACKING SLIP

Print Date : Jun-05-2018 2:05 PM | Printed By : RHAY Print No. : 2

No. 122324

Ship To : [1]	For : Account No. [AVIALL-DALLA]
AVIALL CENTRAL WAREHOUSE Attn: RECEIVING DEPT. 2750 REGENT BOULEVARD DFW Airport, TX 75261 UNITED STATES Tel. : 972-586-1994	AVIALL Attn: MICHELLE ZHONG, BUYER 2700 Regent Blvd DFW Airport, TX 75261 UNITED STATES Tel. : 972-586-1994

S.O. No.	:079738	Our Ref	:	Domestic AW :	
Cust P.O.	:0045895010	Your Ref	:DROP OFF	Int'l AWB :	
Picked On	:May-14-2018	Spec Inst	:	Origin	:
Shipped On	:May-28-2018	Contract	:	Transpor :	
Ship Via	:DROP OFF	Lic No.	:	Nationali :	
F.O.B.	:DESTINATION	Expires	:	Trip/Flig :	
Terms	:NET 30				
Our Contact	:MERLE LANGTON				

Line	P/N & Description	Cn	Ordered	Qty Shipped	Back Order	Packaging
10	MS24566-1B PULLEY: ANTI-FRICTION UID391585 Rev: F/A Note: ND3; PKG 1 PER LOT #: 32188 REV: F/A MFG: RALMARK CURE DATE: 1Q17 CAGE CODE: 25337 Country Of Origin:USA	ND3	200.00	82.00 EA	118.00	
10	MS24566-1B PULLEY: ANTI-FRICTION UID391683 Rev: F/A Note: ND3; PKG 1 PER LOT #: 32189 REV: F/A MFG: RALMARK CURE DATE: 2Q17 CAGE CODE: 25337 Country Of Origin:USA	ND3		118.00 EA	0.00	

ITEM MS24566-1B=28
BATCH 7364884430
SSOMSANIT
06/14/18

UNLESS NOTED ON THE FACE HEREOF, ANY AND ALL MATERIALS/PARTS SUPPLIED ON

Copyright (c) PENTAGON 2000 Software, Inc.
Ser #:[2000.21078] Ver 9.00.03 Build 88

CUSTOMER COPY

AVIALL - TRUE CERTIFIED COPY - 07/16/2018 - DFULCHER - 7364884430

8-2

1160 MUSTANG DR. SUITE 300
DFW AIRPORT, TX 75261
TEL: (817) 328-6600 FAX (972) 456-1015
WWW.AEROGLEN.COM
CAGE CODE 9V172

ISO9001 / AS9100 / AS9120 REGISTERED
PRI CERTIFICATION: 14-2127, 14-2128R

AERO-GLEN INTERNATIONAL LLC
COMMITMENT | EXECUTION | RESULTS

PACKING SLIP

Pick Ticket No. 122324 Page:2/2

Your Ref : DROP OFF

Line	P/N & Description	Cn	Ordered	Qty Shipped	Back Order	Packaging
	THIS S.O./P.O. MAY NOT BE DFARS 252.22-7014 ALT. 1 COMPLIANT. AERO-GLEN, INTL., GRAPEVINE, TX., USA, WILL NOT BE HELD IN VIOLATION OF THE DFARS/SPECIALTY MATERIAL REQUIREMENT. THE COMMODITIES SOLD BY AERO-GLEN, INTL., MUST BE EXPORTED FROM THE UNITED STATES IN ACCORDANCE WITH ALL U.S. EXPORT LAWS. ANY DIVERSION CONTRARY TO U.S. LAW IS PROHIBITED.					

Copyright (c) PENTAGON2000 Software, Inc.
Ser #:[2000.21078] Ver 9.00.03 Build 88

CUSTOMER COPY

AVIALL - TRUE CERTIFIED COPY - 07/16/2018 - DFULCHER - 7364884430

8-3

1160 MUSTANG DR. SUITE 300
DFW AIRPORT, TX 75261
TEL: (817) 328-6600 FAX (972) 456-1015
WWW.AEROGLEN.COM
CAGE CODE 9V172

ISO9001 / AS9100 / AS9120 REGISTERED
PRI CERTIFICATION: 14-2127, 14-2128R

AERO-GLEN INTERNATIONAL LLC
COMMITMENT | EXECUTION | RESULTS

CERTIFICATE OF CONFORMANCE

Print Date : Jun-05-2018 2:05 PM — Printed By : RHAY Print No. : 3

No. : 122324 Pg:1/2

Sold To : Account No. [AVIALL-DALLA]	Shipped To :
AVIALL Attn: Email invoce to apinvoices@aviall.com, ACCOUNTS PAYABLE 2700 Regent Blvd DFW Airport, TX 75261 UNITED STATES Tel. : 972-586-1426	AVIALL CENTRAL WAREHOUSE Attn: RECEIVING DEPT. 2750 REGENT BOULEVARD DFW Airport, TX 75261 UNITED STATES Tel. : 972-586-1994

S.O. No.	:079738	Our Ref	:	Domestic AW:	
Customer P.	:0045895010	Your Ref	:DROP OFF	Int'l AWB:	
Issued Date	:May-14-2018	Spec Inst	:	Origin	:
		Contract	:	Transpor:	
Ship Via	:DROP OFF	License No.	:	Nationali:	
F.O.B.	:DESTINATION	Expires	:	Trip/Flig :	
Shipped Dat	:May-28-20	Terms	: NET 30		
Our Contact	:MERLE LANGTON				

Line	P/N & Description	Cnd	Qty Ordered	Shipped	Unit Sell Price	Amount
10	**MS24566-1B** PULLEY: ANTI-FRICTION **Country Of Origin:**USA **UID#**391585 **Pick Ticket / Packing Slip No. : 122324** **Rev:** F/A **Note:** ND3; PKG 1 PER **LOT #:** 32188 **REV:** F/A **MFG:** RALMARK **CURE DATE:** 1Q17 **CAGE CODE:** 25337	ND3	**200.00**EA	**82.00** (Qty. Back 118.00)		
10	**MS24566-1B** PULLEY: ANTI-FRICTION **Country Of Origin:**USA **UID#**391683 **Pick Ticket / Packing Slip No. : 122324** **Rev:** F/A **Note:** ND3; PKG 1 PER **LOT #:** 32189	ND3		**118.00** (Qty. Back 0.00)		

THIS IS TO CERTIFY THAT THE MATERIAL(S) FORWARDED TO YOU MEET ALL THE PO, DRAWING, CHEMICAL AND PHYSICAL REQUIREMENTS AND FREE OF ANY FOREIGN OBJECT DEBRIS. AERO-GLEN, INTL. DISCLAIMS ANY RESPONSIBILITY FOR ALL MANUFACTURING OR ANY FUNCTIONAL DEFECTS AND HEREBY LIMITS EXPRESSED OR IMPLIED WARRANTIES TO LIABILITY FOR THE COST OF REPLACING THE MATERIAL OR REFUNDING THE INVOICE VALUE OF MATERIAL, SO ACCEPTING DELIVERY OF THIS MATERIAL ACKNOWLEDGES AWARENESS OF SUCH LIMITATION OF LIABILITY. PRODUCTS HAVE NOT BEEN INTRODUCED TO MERCURY CONTAMINATION WHILE AT OUR FACILITY.
THE COMMODITIES SOLD BY AERO-GLEN, INTL MUST BE EXPORTED FROM THE UNITED STATES IN ACCORDANCE WITH U.S. LAWS. ANY DIVERSION CONTRARY TO U.S. LAW IS PROHIBITED. ANY OR ALL MATERIALS/PARTS SUPPLIED ON THIS S.O./P.O. SHALL BE DFARS 252.225-7014 ALTERNATE 1 COMPLIANT AS NOTED ON A LINE ITEM BASIS.

Continued on next page

Copyright (c) PENTAGON2000 Software, Inc.
Ser #:[2000.21078] Ver 9.00.03 Build 88

ORIGINAL (COPY.)

AVIALL - TRUE CERTIFIED COPY - 07/16/2018 - DFULCHER - 7364884430

8-4

1160 MUSTANG DR. SUITE 300
DFW AIRPORT, TX 75261
TEL: (817) 328-6600 FAX (972) 456-1015
WWW.AEROGLEN.COM
CAGE CODE 9V172

ISO9001 / AS9100 / AS9120 REGISTERED
PRI CERTIFICATION: 14-2127, 14-2128R

AERO-GLEN INTERNATIONAL LLC
COMMITMENT | EXECUTION | RESULTS

CERTIFICATE OF CONFORMANCE

Pick Ticket No. 122324 Page :2/2

Your Ref : DROP OFF

Line	P/N & Description	Cnd	Qty Ordered	Shipped	Unit Sell Price	Amount
	REV: F/A MFG: RALMARK CURE DATE: 2Q17 CAGE CODE: 25337					

THIS IS TO CERTIFY THAT THE MATERIAL(S) FORWARDED TO YOU MEET ALL THE PO, DRAWING, CHEMICAL AND PHYSICAL REQUIREMENTS AND FREE OF ANY FOREIGN OBJECT DEBRIS. AERO-GLEN, INTL. DISCLAIMS ANY RESPONSIBILITY FOR ALL MANUFACTURING OR ANY FUNCTIONAL DEFECTS AND HEREBY LIMITS EXPRESSED OR IMPLIED WARRANTIES TO LIABILITY FOR THE COST OF REPLACING THE MATERIAL OR REFUNDING THE INVOICE VALUE OF MATERIAL, SO ACCEPTING DELIVERY OF THIS MATERIAL ACKNOWLEDGES AWARENESS OF SUCH LIMITATION OF LIABILITY. PRODUCTS HAVE NOT BEEN INTRODUCED TO MERCURY CONTAMINATION WHILE AT OUR FACILITY.
THE COMMODITIES SOLD BY AERO-GLEN, INTL MUST BE EXPORTED FROM THE UNITED STATES IN ACCORDANCE WITH U.S. EXPORT LAWS. ANY DIVERSION CONTRARY TO U.S. LAW IS PROHIBITED. ANY OR ALL MATERIALS/PARTS SUPPLIED ON THIS S.O./P.O. SHALL BE DFARS 252.225-7014 ALTERNATE 1 COMPLIANT AS NOTED ON A LINE ITEM BASIS.

TYSON KAY, V.P.

Copyright (c) PENTAGON 2000 Software, Inc.
Ser #:[2000.21078] Ver 9.00.03 Build 98

ORIGINAL (COPY.)

AVIALL - TRUE CERTIFIED COPY - 07/16/2018 - DFULCHER - 7364884430

8-5

RALMARK
COMPANY

Shipping List

83 E. Luzerne Avenue - Larksville
P.O. Box 1507 - Kingston, PA 18704-0507 U.S.A.
Phone: 570-288-9331 Fax: 570-288-0902

Number: 125309 Date: 08/28/2017
Customer PO: 035425

Sold To: AERO-GLEN INTERNATIONAL, LLC
PO BOX 878
GRAPEVINE, TX 76099-0878
USA

Ship To: AERO-GLEN INTERNATIONAL, LLC
1160 MUSTANG DR.
SUITE 300, DFW INT'L. AIRPORT
DALLAS, TX 75261
USA

Buyer: CHRIS PATTON
Ph: 817-328-6600 Fax: 972-456-1015 Ph: 817-328-6600 Fax: 972-456-1015

Customer #	SO	Ship Via	Weight	# of Boxes	Bill of Lading #	F O B
2959	24276	FEDEX GND CLLT	17	1	7701 2348 8330	EXW - LARKSVILLE, PA USA

Item	Description	Order Quantity	Ship Quantity
1	Ralmark Part #: MS24566-1B Rev: F/A SO Item: 003 U/M: ea PULLEY, CONTROL PER MIL-DTL-7034F AND MIL-DTL-7034/4A MADE IN USA LOT: 32188 LUBE 03/02/17 QTY: 82 LOT: 32189 LUBE 05/10/17 QTY: 418	500	500
	AUG 28 2017		

THESE MATERIALS WERE PRODUCED IN COMPLIANCE WITH THE FAIR LABOR ACT OF 1938, AS AMENDED

AVIALL - TRUE CERTIFIED COPY - 07/16/2018 - DFULCHER - 7364884430

8-6

RALMARK COMPANY

83 E. Luzerne Avenue - Larksville
P.O. Box 1507 - Kingston, PA 18704-0507 U.S.A.
Phone: 570-288-9331 Fax: 570-288-0902

Certificate Of Conformance

Number: 125399 Date: 08/28/2017
Customer PO: 035425

Sold To: AERO-GLEN INTERNATIONAL, LLC
PO BOX 878

GRAPEVINE, TX 76099-0878
USA

Ship To: AERO-GLEN INTERNATIONAL, LLC
1160 MUSTANG DR.
SUITE 300, DFW INT'L. AIRPORT
DALLAS, TX 75261
USA

Buyer: CHRIS PATTON
Ph: 817-328-6600 EXT: Fax: 972-456-1015 Ph: 817-328-6600 Fax: 972-456-1015

Customer #	SO	Ship Via	Weight	# of Boxes	Bill of Lading #	F.O.B.
2959	24276	FEDEX GND CLLT	17	1	7701 2348 8330	EXW - LARKSVILLE, PA USA

Item	Description	Order Quantity	Ship Quantity
1	Ralmark Part #: MS24566-1B Rev: F/A SO Item: 003 U/M: ea PULLEY, CONTROL PER MIL-DTL-7034F AND MIL-DTL-7034/4A MADE IN USA LOT: 32188 LUBE 03/02/17 QTY: 82 LOT: 32189 LUBE 05/10/17 QTY: 418	500	500

We hereby certify that test reports covering the above are on file, subject to your examination, and indicate conformance with applicable specification and/or purchase order requirements.

AUG 28 2017
Date

Eugene Zablotney, Quality Assurance Technician
Authorized Signature

ATIS OE
FR.145.566
DDU

THESE MATERIALS WERE PRODUCED IN COMPLIANCE WITH THE FAIR LABOR ACT OF 1938, AS AMENDED

AVIALL - TRUE CERTIFIED COPY - 07/16/2018 - DFULCHER - 7364884430

1160 MUSTANG DR. SUITE 300
DFW AIRPORT, TX 75261
TEL: (817) 328-6600 FAX (972) 456-1015
WWW.AEROGLEN.COM
CAGE CODE 9V172
ISO9001 / AS9100 / AS9120 REGISTERED
PRI CERTIFICATION: 14-2127, 14-2128R

AERO-GLEN INTERNATIONAL LLC
COMMITMENT | EXECUTION | RESULTS

PACKING SLIP

Print Date : Dec-28-2017 8:51 AM | Printed By : NROA Print No. : 2

No. 112533 Pg:1/1

Ship To : [1]	For : Account No. [AVIALL-DALLA]
AVIALL CENTRAL WAREHOUSE Attn: RECEIVING DEPT. 2750 REGENT BOULEVARD DFW Airport, TX 75261 UNITED STATES Tel. : 972-586-1994	AVIALL Attn: CAMERON ROSS 2700 Regent Blvd DFW Airport, TX 75261 UNITED STATES Tel. : 972-586-1994

S.O. No.	:074513	Our Ref	:	Domestic AW :	
Cust P.O.	:0045774609	Your Ref	:DROP OFF	Int'l AWB :	
Picked On	:Dec-27-2017	Spec Inst	:	Origin :	
Shipped On	:Dec-26-2017	Contract	:	Transpor :	
Ship Via	:DROP OFF	Lic No.	:	Nationali :	
F.O.B.	:DESTINATION	Expires	:	Trip/Flig :	
Terms	:NET 30				
Our Contact	:MERLE LANGTON				

Line	P/N & Description	Cn	Ordered	Qty Shipped	Back Order	Packaging
10	MS20220-2 PULLEY GROOVE UID395506 Rev: F/A Note: PULLEY: GROOVE - PKG 1 PER LOT #: 32906 REV: F/A MFG: RALMARK CURE DATE: 4Q17 CAGE CODE: 25337 Country Of Origin:USA	ND3	250.00	250.00 EA	0.00	

UNLESS NOTED ON THE FACE HEREOF, ANY AND ALL MATERIALS/PARTS SUPPLIED ON THIS S.O./P.O. MAY NOT BE DFARS 252.22-7014 ALT. 1 COMPLIANT. AERO-GLEN, INTL., GRAPEVINE, TX., USA, WILL NOT BE HELD IN VIOLATION OF THE DFARS/SPECIALTY MATERIAL REQUIREMENT. THE COMMODITIES SOLD BY AERO-GLEN, INTL., MUST BE EXPORTED FROM THE UNITED STATES IN ACCORDANCE WITH ALL U.S. EXPORT LAWS. ANY DIVERSION CONTRARY TO U.S. LAW IS PROHIBITED.

ITEM MS20220-2=28

BATCH 7364744334

BHORTON
01/02/18

Copyright (c) PENTAGON2000 Software, Inc.
Ser #[2000.21078] Ver 9.00.03 Build 88

CUSTOMER COPY

AVIALL - TRUE CERTIFIED COPY - 07/16/2018 - JBUSTILLOS - 7364744334

9-2

1160 MUSTANG DR. SUITE 300
DFW AIRPORT, TX 75261
TEL: (817) 328-6600 FAX (972) 456-1015
WWW.AEROGLEN.COM
CAGE CODE 9V172

ISO9001 / AS9100 / AS9120 REGISTERED
PRI CERTIFICATION: 14-2127, 14-2128R

AERO-GLEN INTERNATIONAL LLC
COMMITMENT | EXECUTION | RESULTS

CERTIFICATE OF CONFORMANCE

Print Date : Dec-28-2017 8:51 AM | Printed By : NROA Print No. : 3

No. : 112533 Pg:1/1

Sold To : Account No. [AVIALL-DALLA]	Shipped To :
AVIALL Attn: Email invoce to apinvoices@aviall.com, ACCOUNTS PAYABLE 2700 Regent Blvd DFW Airport, TX 75261 UNITED STATES Tel. : 972-586-1426	AVIALL CENTRAL WAREHOUSE Attn: RECEIVING DEPT. 2750 REGENT BOULEVARD DFW Airport, TX 75261 UNITED STATES Tel. : 972-586-1994

Line	P/N & Description	Cnd	Qty Ordered	Shipped	Unit Sell Price	Amount
10	**MS20220-2** PULLEY GROOVE **Country Of Origin:** USA **Pick Ticket / Packing Slip No. : 112533** **Rev:** F/A **Note:** PULLEY: GROOVE - PKG 1 PER **LOT #:** 32906 **REV:** F/A **MFG:** RALMARK **CURE DATE:** 4Q17 **CAGE CODE:** 25337	ND3	250.00 EA	250.00 (Qty. Back 0.00)		

THIS IS TO CERTIFY THAT THE MATERIAL(S) FORWARDED TO YOU MEET ALL THE PO, DRAWING, CHEMICAL AND PHYSICAL REQUIREMENTS AND FREE OF ANY FOREIGN OBJECT DEBRIS. AERO-GLEN, INTL. DISCLAIMS ANY RESPONSIBILITY FOR ALL MANUFACTURING OR ANY FUNCTIONAL DEFECTS AND HEREBY LIMITS EXPRESSED OR IMPLIED WARRANTIES TO LIABILITY FOR THE COST OF REPLACING THE MATERIAL OR REFUNDING THE INVOICE VALUE OF MATERIAL, SO ACCEPTING DELIVERY OF THIS MATERIAL ACKNOWLEDGES AWARENESS OF SUCH LIMITATION OF LIABILITY. PRODUCTS HAVE NOT BEEN INTRODUCED TO MERCURY CONTAMINATION WHILE AT OUR FACILITY.
THE COMMODITIES SOLD BY AERO-GLEN, INTL MUST BE EXPORTED FROM THE UNITED STATES IN ACCORDANCE WITH U.S. EXPORT LAWS. ANY DIVERSION CONTRARY TO U.S. LAW IS PROHIBITED. ANY OR ALL MATERIALS/PARTS SUPPLIED ON THIS S.O./P.O. SHALL BE DFARS 252.225-7014 ALTERNATE 1 COMPLIANT AS NOTED ON A LINE ITEM BASIS.

TYSON KAY, V.P.

Copyright (c) PENTAGON 2000 Software, Inc.
ORIGINAL (COPY.)
Ser #:[2000.21078] Ver 9.00.03 Build 88

AVIALL - TRUE CERTIFIED COPY - 07/16/2018 - JBUSTILLOS - 7364744334

9-3

RALMARK
COMPANY

Shipping List

83 E. Luzerne Avenue - Larksville
P.O. Box 1507 - Kingston, PA 18704-0507 U.S.A.
Phone: 570-288-9331 Fax: 570-288-0902

Number: 125801 Date: 12/19/2017
Customer PO: 040919

Sold To: AERO-GLEN INTERNATIONAL, LLC
PO BOX 878
GRAPEVINE, TX 76099-0878
USA

Ship To: AERO-GLEN INTERNATIONAL, LLC
1160 MUSTANG DR.
SUITE 300, DFW INT'L. AIRPORT
DALLAS, TX 75261
USA

Buyer: ALEX FAZZARI
Ph: 817-328-6600 Fax: 972-456-1015 Ph: 817-328-6600 Fax: 972-456-1015

Customer #	SO	Ship Via	Weight	# of Boxes	Bill of Lading #	F O B
2959	25118	FEDEX GND CLLT	95	3	771034871211	EXW - LARKSVILLE, PA USA

Item	Description	Order Quantity	Ship Quantity
1	Ralmark Part #: MS20220-2 Rev: F/A Cust PO Item: 001 U/M: ea PULLEY, GROOVE PER MIL-DTL-7034F AND MIL-DTL-7034/2A MADE IN USA LOT: 32906 LUBE 11/08/17 QTY: 500	500	500
	DEC 19 2017		

THESE MATERIALS WERE PRODUCED IN COMPLIANCE WITH THE FAIR LABOR ACT OF 1938, AS AMENDED

AVIALL - TRUE CERTIFIED COPY - 07/16/2018 - JBUSTILLOS - 7364744334

RALMARK
COMPANY

83 E. Luzerne Avenue - Larksville
P.O. Box 1507 - Kingston, PA 18704-0507 U.S.A.
Phone: 570-288-9331 Fax: 570-288-0902

Certificate Of Conformance

Number: 125801 Date: 12/19/2017
Customer PO: 040919

Sold To: AERO-GLEN INTERNATIONAL, LLC
PO BOX 878

GRAPEVINE, TX 76099-0878
USA

Ship To: AERO-GLEN INTERNATIONAL, LLC
1160 MUSTANG DR.
SUITE 300, DFW INT'L. AIRPORT
DALLAS, TX 75261
USA

Buyer: ALEX FAZZARI
Ph: 817-328-6600 EXT: Fax: 972-456-1015 Ph: 817-328-6600 Fax: 972-456-1015

Customer #	SO	Ship Via	Weight	# of Boxes	Bill of Lading #	F O B
2959	25118	FEDEX GND CLLT	95	3	771034871211	EXW - LARKSVILLE, PA USA

Item	Description	Order Quantity	Ship Quantity
1	Ralmark Part #: MS20220-2 Rev: F/A Cust PO Item: 001 U/M: ea PULLEY, GROOVE PER MIL-DTL-7034F AND MIL-DTL-7034/2A MADE IN USA LOT: 32906 LUBE 11/08/17 QTY: 500	500	500

We hereby certify that test reports covering the above are on file, subject to your examination, and indicate conformance with applicable specification and/or purchase order requirements.

DEC 19 2017
Date

Eugene Zablotney, Quality Assurance Technician
Authorized Signature

ATIS OE
FR.145.566
DDU

THESE MATERIALS WERE PRODUCED IN COMPLIANCE WITH THE FAIR LABOR ACT OF 1938, AS AMENDED

AVIALL - TRUE CERTIFIED COPY - 07/16/2018 - JBUSTILLOS - 7364744334

1. Approving Civil Aviation Authority/Country: FAA/United States	2. **AUTHORIZED RELEASE CERTIFICATE** FAA Form 8130-3, AIRWORTHINESS APPROVAL TAG	3. Form Tracking Number: 7364805483 1000000042000140

4. Organization Name and Address:	5. Work Order/Contract/Invoice Number:
AVIALL SERVICES INC. 2750 REGENT BLVD DFW AIRPORT, TX 75261	1227

6. Item:	7. Description:	8. Part Number:	9. Quantity:	10. Serial Number:	11. Status/Work:
1.	MUFFLER	PIM0007	1	012128-0005	NEW

12. Remarks:

MQ
JES
1738

ATIS OE
FR.145.566
DDU

THIS PMA PART IS NOT A CRITICAL COMPONENT.
THE PRODUCT(S)/ARTICLE(S) SHIPPED UNDER THIS APPROVAL WERE PRODUCED BY WALL COLMONOY CORP.

13a. Certifies the items identified above were manufactured in conformity to:		14a. ☐ 14 CFR 43.9 Return to Service ☐ Other regulation specified in Block 12 Certifies that unless otherwise specified in Block 12, the work identified in Block 11 and described in Block 12 was accomplished in accordance with Title 14, Code of Federal Regulations, part 43 and in respect to that work, the items are approved for return to service.	
☒ Approved design data and are in a condition for safe operation. ☐ Non-approved design data specified in Block 12.			
13b. Authorized Signature:	13c. Approval/Authorization No.: 278953503	14b. Authorized Signature:	14c. Approval/Certificate No.:
13d. Name (Typed or Printed): Harry Gammons	13e. Date (dd/mmm/yyyy): 09 MAY 2018	14d. Name (Typed or Printed):	14e. Date (dd/mmm/yyyy):

User/Installer Responsibilities

It is important to understand that the existence of this document alone does not automatically constitute authority to install the aircraft engine/propeller/article. Where the user/installer performs work in accordance with the national regulations of an airworthiness authority different than the airworthiness authority of the country specified in Block 1, it is essential that the user/installer ensures that his/her airworthiness authority accepts aircraft engine(s)propeller(s)/ article(s) from the airworthiness authority of the country specified in the Block 1. Statements in Blocks 13a and 14a do not constitute installation certification. In all cases, aircraft maintenance records must contain an installation certification issued in accordance with the national regulations by the user/installer before the aircraft may be flown.

NSN:0052-00-012-9005

FAA Form 8130-3 (02-14)

Rear

Printed on 17/05/2018 16:47
by Nicolas Dadou Pro +596 596 524 905 Fax +596 596 381

AMC

SERVICEABLE

MATERIAL

P/N	**PIM0007**
S/N / Batch	**012128-005**
Descrip.	MUFFLER
Qty. 1	Owner: ATISAWAK
ATIS	

PAR-902

GRN: MREC 1232-2

CONSULT AMS TO GET THE LATEST SITUATION

LAST CERTIFICATION

DATE 09/05/2018 SLL NEVER

REF. AVIALL-7364805483

	TS (FH)	CS (FC)
INS	0	0
OHL	0	0
NEW	0	0

FORM AMS/30152 REV 02

1. Approving Civil Aviation Authority/Country:	2.	3. Form Tracking Number:
FAA/UNITED STATES	**AUTHORIZED RELEASE CERTIFICATE** FAA Form 8130-3, AIRWORTHINESS APPROVAL TAG	***18-0373***

4. Organization Name and Address:

WALLCOLMONOY

WALL COLMONOY CORPORATION - PQ0352SW
4700 S.E. 59th STREET, OKLAHOMA CITY, OK. 73135

5. Work Order/Contract/Invoice Number: 45861865

6.Item:	7. Description	8. Part Number:	9. Quantity:	10. Serial Number:	11. Status/Work:
1	Muffler	PIM0007	1	012128-0005	New

12. Remarks:

This PMA Part is not a critical component.

FAA-PMA Manufactured By Wall Colmonoy Corp.

Revision; Date: C; 2/10/2017

Work Completed: 3/7/2018

This is a "Certified True Copy" if Block 13b is signed in Blue Ink.

13a. Certifies the items identified above were manufactured in conformity to:

- [X] Approved design data and are in a condition for safe operation.
- [ ] Non-approved design data specified in Block 12.

~~14a. [ ] 14 CFR 43.9 Return to Service. [ ] Other regulation specified in Block 12. Certifies that unless otherwise specified in Block 12, the work identified in Block 11 and described in Block 12 was accomplished in accordance with Title 14, Code of Federal Regulations, part 43 and in respect to that work, the items are approved for return to service.~~

13b. Authorized Signature:	13c. Approval/Authorization No.:	~~14b. Authorized Signature:~~	~~14c. Approval/Certificate No.:~~
Roger Stavnem	***116932607***		
13d. Name (Typed or Printed):	13e. Date (dd/mmm/yyyy):	~~14d. Name (Typed or Printed):~~	~~14e. Date (dd/mmm/yyyy):~~
Roger Stavnem DMIR	12/MAR/2018		

User/Installer Responsibilities

It is important to understand that the existance of this document alone does not automatically constitute authority to install the aircraft engine/propeller/article.

Where the user/installer performs work in accordance with the national regulations of an airworthiness authority different than the airworthiness authority of the country specified in Block 1, it is essential that the user/installer ensures that his/her airworthiness authority accepts aircraft engine(s)/propeller(s)/article(s) from the airworthiness authority of the country specified in Block 1.

Statements in Blocks 13a and 14a do not constitute installation certification. In all cases, aircraft maintenance records must contain an installation certification issued in accordance with the national regulations by theuser/installer before the aircraft may be flown.

AVIALL - TRUE CERTIFIED COPY - 05/09/2018 - JBUSTILLOS - 7364805483

10-2

(13)

5

1. Approving Civil Aviation Authority/Country: FAA/United States	2. AUTHORIZED RELEASE CERTIFICATE FAA Form 8130-3, AIRWORTHINESS APPROVAL TAG	3. Form Tracking Number: 4888256
4. Organization Name and Address: Textron Aviation Inc. (PC4) Textron Aviation Inc. 1 Cessna Blvd, Wichita, KS 67215		5. Work Order/Contract/Invoice Number: 2110882

6. Item:	7. Description:	8. Part Number:	9. Quantity:	10. Serial Number:	11. Status/Work:
3	GASKET	77611	5	N/A	New

12. Remarks:

AIRWORTHINESS APPROVAL - PARTS.

13a. Certifies the items identified above were manufactured in conformity to:

☒ Approved design data and are in a condition for safe operation.

☐ Non-approved design data specified in Block 12.

14a. [illegible]

13b. Authorized Signature:	13c. Approval/Authorization No.: ODA-100129-CE	[illegible]
13d. Name (Typed or Printed): DANIEL P. BEAT	13e. Date (dd/mmm/yyyy): 07/Jan/2016	[illegible]

User/Installer Responsibilities

It is important to understand that the existence of this document alone does not automatically constitute authority to install the aircraft engine/propeller/article.

Where the user/installer performs work in accordance with the national regulations of an airworthiness authority different than the airworthiness authority of the country specified in Block 1, it is essential that the user/installer ensures that his/her airworthiness authority accepts aircraft engine(s)/propeller(s)/article(s) from the airworthiness authority of the country specified in Block 1.

Statements in Blocks 13a and 14a do not constitute installation certification. In all cases, aircraft maintenance records must contain an installation certification issued in accordance with the national regulations by the user/installer before the aircraft may be flown.

FAA Form 8130-3 (02-14)

NSN: 0052-00-012-9005

Photocopie effectuée le 20/07/18
au titre d'un délotissement de 4 pièce(s)
sur un total de 5 pièces
par SAN de la société ATIS

12

1. Approving Civil Aviation Authority / Country: FAA/UNITED STATES

2. **AUTHORIZED RELEASE CERTIFICATE**
FAA FORM 8130-3, AIRWORTHINESS APPROVAL TAG

3. Form Tracking Number: 4375059

4. Organization Name and Address:
Cessna Aircraft Company (PC4)
Cessna Parts Distribution Dept. 702
5800 E Pawnee, Wichita, KS 67218

5. Work Order/Contract/Invoice Number: 1404954

6. Item:	7. Description:	8. Part Number:	9. Quantity:	10. Serial Number:	11. Status/Work:
12	NUT	STD1410	10	N/A	New

12. Remarks:
XPORT MARTINIQUE

ATIS OE FR.145.566 DDU

PO# 1022168

13a. Certifies the items identified above were manufactured in conformity to:
☒ Approved design data and are in a condition for safe operation.
☐ Non-approved design data specified in Block 12.

14a. ☐ 14 CFR 43.9 Return to Service ☐ Other regulation specified in block 12
Certifies that unless otherwise specified in Block 12, the work identified in Block 11 and described in Block 12 was accomplished in accordance with Title 14, Code of Federal Regulations, part 43 and in respect to that work, the items are approved for return to service.

13b. Authorized Signature: Marilyn K. Farber
13c. Approval/Authorization No.: ODA-100129-CE
14b. Authorized Signature:
14c. Approval/Certificate No.:
13d. Name (Typed or Printed): ARILYN K. FARBER
13e. Date (dd/mmm/yyyy): 09/OCT/2014
14d. Name (Typed or Printed):
14e. Date (dd/mmm/yyyy):

User / Installer Responsibilities
s important to understand that the existence of this document alone does not automatically constitute authority to install the aircraft engine/propeller/article.
here the user/installer performs work in accordance with the national regulations of an airworthiness authority different than the airworthiness authority of the country
ecified in Block 1, it is essential that the user/installer ensures that his/her airworthiness authority accepts aircraft engine(s)/propeller(s)/article(s) from the
rworthiness authority of the country specified in Block 1
tements in Blocks 13a and 14a do not constitute installation certification. In all cases, aircraft maintenance records must contain an installation certification issued in
cordance with the national regulations by the user/installer before the aircraft may be flown.

A Form 8130-3 (02/14) NSN: 0052-00-012-9005

1. Approving Civil Aviation Authority / Country: FAA/UNITED STATES
2. AUTHORIZED RELEASE CERTIFICATE FAA FORM 8130-3, AIRWORTHINESS APPROVAL TAG
3. Form Tracking Number: 43750
4. Organization Name and Address: Cessna Aircraft Company (PC4) Cessna Parts Distribution Dept. 702 5800 E Pawnee, Wichita, KS 67218
5. Work Order/Contract 14
6. Item: 12 | 7. Description: NUT | 8. Part Number: STD1410 | 9. Quantity: 10 | 10. Serial Number: N/A
12. Remarks: EXPORT MARTINIQUE
ATIS C FR.145. DDU
PO# 1022168
13a. Certifies the items identified above were manufactured in conformity to: ☒ Approved design data and are in a condition for safe operation. ☐ Non-approved design data specified in Block 12.
14a. ☐ 14 CFR 43.9 Return to Service ☐ Other regulation sp
Certifies that unless otherwise specified in Block 12, the w Block 11 and described in Block 12 was accomplished in Title 14, Code of Federal Regulations, part 43 and in resp the items are approved for return to service.
13b. Authorized Signature: Marilyn K. Farber
13c. Approval/Authorization No.: ODA-100129-CE
14b. Authorized Signature:
14c. Appr
13d. Name (Typed or Printed): MARILYN K. FARBER
13e. Date (dd/mmm/yyyy): 09/OCT/2014
14d. Name (Typed or Printed):
14e. Date
User / Installer Responsibilities
It is important to understand that the existence of this document alone does not automatically constitute authority to install the aircraft engine/propelle
Where the user/installer performs work in accordance with the national regulations of an airworthiness authority different than the airworthiness autho
specified in Block 1, it is essential that the user/installer ensures that his/her airworthiness authority accepts aircraft engine(s)/propeller(s)/article(s) fro
airworthiness authority of the country specified in Block 1
Statements in Blocks 13a and 14a do not constitute installation certification. In all cases, aircraft maintenance records must contain an installation cer
accordance with the national regulations by the user/installer before the aircraft may be flown.
FAA Form 8130-3 (02/14) NSN

1. Approving Civil Aviation Authority / Country: FAA/UNITED STATES
2. AUTHORIZED RELEASE CERTIFICATE FAA FORM 8130-3, AIRWORTHINESS APPROVAL TAG
3. Form Tracking Number: 4375059
4. Organization Name and Address: Cessna Aircraft Company (PC4) Cessna Parts Distribution Dept. 702 5800 E Pawnee, Wichita, KS 67218
5. Work Order/Contract/Invoice Number: 1404954
6. Item: 12 | 7. Description: NUT | 8. Part Number: STD1410 | 9. Quantity: 10 | 10. Serial Number: N/A | 11. Status/Work: New
12. Remarks: XPORT MARTINIQUE
ATIS OE FR.145.566 DDU
PO# 1022168
13a. Certifies the items identified above were manufactured in conformity to: ☒ Approved design data and are in a condition for safe operation. ☐ Non-approved design data specified in Block 12.
14a. ☐ 14 CFR 43.9 Return to Service ☐ Other regulation specified in block 12
Certifies that unless otherwise specified in Block 12, the work identified in Block 11 and described in Block 12 was accomplished in accordance with Title 14, Code of Federal Regulations, part 43 and in respect to that work, the items are approved for return to service.
13b. Authorized Signature: Marilyn K. Farber
13c. Approval/Authorization No.: ODA-100129-CE
14b. Authorized Signature:
14c. Approval/Certificate No.:
13d. Name (Typed or Printed): ARILYN K. FARBER
13e. Date (dd/mmm/yyyy): 09/OCT/2014
14d. Name (Typed or Printed):
14e. Date (dd/mmm/yyyy):
User / Installer Responsibilities
s important to understand that the existence of this document alone does not automatically constitute authority to install the aircraft engine/propeller/article.
here the user/installer performs work in accordance with the national regulations of an airworthiness authority different than the airworthiness authority of the country
ecified in Block 1, it is essential that the user/installer ensures that his/her airworthiness authority accepts aircraft engine(s)/propeller(s)/article(s) from the
rworthiness authority of the country specified in Block 1
tements in Blocks 13a and 14a do not constitute installation certification. In all cases, aircraft maintenance records must contain an installation certification issued in
cordance with the national regulations by the user/installer before the aircraft may be flown.
A Form 8130-3 (02/14) NSN: 0052-00-012-9005

1. Approving Civil Aviation Authority / Country: FAA/UNITED STATES
2. AUTHORIZED RELEASE CERTIFICATE FAA FORM 8130-3, AIRWORTHINESS APPROVAL TAG
3. Form Tracking Number: 4375059
4. Organization Name and Address: Cessna Aircraft Company (PC4) Cessna Parts Distribution Dept. 702 5800 E Pawnee, Wichita, KS 67218
5. Work Order/Contract/Invoice N 14049
6. Item: 12 | 7. Description: NUT | 8. Part Number: STD1410 | 9. Quantity: 10 | 10. Serial Number: N/A | 11. Status Ne
12. Remarks: EXPORT MARTINIQUE
ATIS OE FR.145.566 DDU
PO# 1022168
13a. Certifies the items identified above were manufactured in conformity to: ☒ Approved design data and are in a condition for safe operation. ☐ Non-approved design data specified in Block 12.
14a. ☐ 14 CFR 43.9 Return to Service ☐ Other regulation specified in
Certifies that unless otherwise specified in Block 12, the work iden Block 11 and described in Block 12 was accomplished in accordan Title 14, Code of Federal Regulations, part 43 and in respect to the the items are approved for return to service.
13b. Authorized Signature: Marilyn K. Farber
13c. Approval/Authorization No.: ODA-100129-CE
14b. Authorized Signature:
14c. Approval/Certi
13d. Name (Typed or Printed): MARILYN K. FARBER
13e. Date (dd/mmm/yyyy): 09/OCT/2014
14d. Name (Typed or Printed):
14e. Date (dd/mmm
User / Installer Responsibilities
It is important to understand that the existence of this document alone does not automatically constitute authority to install the aircraft engine/propeller/article.
Where the user/installer performs work in accordance with the national regulations of an airworthiness authority different than the airworthiness authority of the
specified in Block 1, it is essential that the user/installer ensures that his/her airworthiness authority accepts aircraft engine(s)/propeller(s)/article(s) from the
airworthiness authority of the country specified in Block 1
Statements in Blocks 13a and 14a do not constitute installation certification. In all cases, aircraft maintenance records must contain an installation certification is
accordance with the national regulations by the user/installer before the aircraft may be flown.
FAA Form 8130-3 (02/14) NSN: 0052-00-

1. Approving Civil Aviation Authority / Country: FAA/UNITED STATES
2. AUTHORIZED RELEASE CERTIFICATE FAA FORM 8130-3, AIRWORTHINESS APPROVAL TAG
3. Form Tracking Number: 4375059
4. Organization Name and Address: Cessna Aircraft Company (PC4) Cessna Parts Distribution Dept. 702 5800 E Pawnee, Wichita, KS 67218
5. Work Order/Contract/Invoice Number: 1404954
6. Item: 12 | 7. Description: NUT | 8. Part Number: STD1410 | 9. Quantity: 10 | 10. Serial Number: N/A | 11. Status/Work: New
12. Remarks: EXPORT MARTINIQUE
ATIS OE FR.145.566 DDU
PO# 1022168
13a. Certifies the items identified above were manufactured in conformity to: ☒ Approved design data and are in a condition for safe operation. ☐ Non-approved design data specified in Block 12
14a. ☐ 14 CFR 43.9 Return to Service ☐ Other regulation specified in block 12
Certifies that unless otherwise specified in Block 12, the work identified in Block 11 and described in Block 12 was accomplished in accordance with Title 14, Code of Federal Regulations, part 43 and in respect to that work, the items are approved for return to service.
13b. Authorized Signature: Marilyn K. Farber
13c. Approval/Authorization No.: ODA-100129-CE
14b. Authorized Signature:
14c. Approval/Certificate No.:
13d. Name (Typed or Printed): MARILYN K. FARBER
13e. Date (dd/mmm/yyyy): 09/OCT/2014
14d. Name (Typed or Printed):
14e. Date (dd/mmm/yyyy):
User / Installer Responsibilities
It is important to understand that the existence of this document alone does not automatically constitute authority to install the aircraft engine/propeller/article.
Where the user/installer performs work in accordance with the national regulations of an airworthiness authority different than the airworthiness authority of the country specified in Block 1, it is essential that the user/installer ensures that his/her airworthiness authority accepts aircraft engine(s)/propeller(s)/article(s) from the airworthiness authority of the country specified in Block 1
Statements in Blocks 13a and 14a do not constitute installation certification. In all cases, aircraft maintenance records must contain an installation certification issued in accordance with the national regulations by the user/installer before the aircraft may be flown.
FAA Form 8130-3 (02/14) NSN: 0052-00-012-9005

ITEM: 12 4375059
ORDER: 4375059 SN/LOT: N/A
PN: STD1410
QTY: 10
U/M: EA
DESC: NUT

Photocopie effectuée le 20/09/2018
du titre d'un délotissement de 1 pièce(s)
sur un total de 10 pièces
par WLE de la société ATIS

13

1. Approving National Aviation Authority / Country: FAA/UNITED STATES	2. AUTHORIZED RELEASE CERTIFICATE FAA FORM 8130-3, AIRWORTHINESS APPROVAL TAG	3. Form Tracking Number: 3913420
4. Organization Name and Address: Cessna Aircraft Company (PC4) Cessna Parts Distribution Dept. 702 5800 E Pawnee, Wichita, KS 67218		5. Work Order/Contract/Invoice Number: 1296061

6. Item:	7. Description:	8. Part Number:	9. Eligibility: *	10. Quantity:	11. Serial/Batch Number:	12. Status/Work:
13	WASHER, FL	NAS1149F0463P	N/A	100	N/A	New

13. Remarks:
EXPORT MARTINIQUE

ATIS OE FR.145.566 RFC

PO# 1013727

14. Certifies the items identified above were manufactured in conformity to:
☒ Approved design data and are in a condition for safe operation
☐ Non-approved design data specified in Block 13.

15. ☐ 14 CFR 43.9 Return to Service ☐ Other regulation specified in Block 13
Certifies that unless otherwise specified in Block 13, the work identified in Block 12 and described in Block 13 was accomplished in accordance with Title 14, Code of Federal Regulations, part 43 and in respect to that work, the items are approved for return to service.

15. Authorized Signature:	16. Approval/Authorization No.:	20. Authorized Signature:	21. Approval/Certificate No.:
Johnny Gl	ODA-100129-CE		
17. Name (Typed or Printed):	**18. Date (m/d/y):**	**22. Name (Typed or Printed):**	**23. Date (m/d/y):**
JOHNNY GLOVER	JUL/19/2013		

User / Installer Responsibilities

It is important to understand that the existence of this document alone does not automatically constitute authority to install the part/component/assembly. Where the user/installer performs work in accordance with the national regulations of an airworthiness authority different than the airworthiness authority of the country specified in Block 1, it is essential that the user/installer ensures that his/her airworthiness authority accepts parts/components/assemblies from the airworthiness authority of the country specified in Block 1.
Statements in Blocks 14 and 19 do not constitute installation certification. In all cases, aircraft maintenance records must contain an installation certification issued in accordance with the national regulations by the user/installer before the aircraft may be flown.

FAA Form 8130-3 (6-01) * Installer must cross-check eligibility with applicable technical data. NSN: 0052-00-012-9005

ITEM: 13 3913420 PN: NAS1149F0463P 13 ORDER: 3913420 SN/LOT: N/A DESC: WASHER, FLA QTY: 100 U/M: EA

Photocopie effectuée le 20/09/2018
au titre d'un délotissement de 4 pièce(s)
sur un total de 100 pièces
par [illegible] de la société ATIS

1. Approving National Aviation Authority / Country: FAA/UNITED STATES	2. AUTHORIZED RELEASE CERTIFICATE FAA FORM 8130-3, AIRWORTHINESS APPROVAL TAG	3. Form Tracking Number: 3913420
4. Organization Name and Address: Cessna Aircraft Company (PC4) Cessna Parts Distribution Dept. 702 5800 E Pawnee, Wichita, KS 67218		5. Work Order/Contract/Invoice Number: 1296061

6. Item:	7. Description:	8. Part Number:	9. Eligibility: *	10. Quantity:	11. Serial/Batch Number:	12. Status/Work:
13	WASHER, FL	NAS1149F0463P	N/A	100	N/A	New

13. Remarks:
EXPORT MARTINIQUE

ATIS OE FR.145.566 RFC

PO# 1013727

14. Certifies the items identified above were manufactured in conformity to:
☒ Approved design data and are in a condition for safe operation.
☐ Non-approved design data specified in Block 13.

15. ☐ 14 CFR 43.9 Return to Service ☐ Other regulation specified in Block 13
Certifies that unless otherwise specified in Block 13, the work identified in Block 12 and described in Block 13 was accomplished in accordance with Title 14, Code of Federal Regulations, part 43 and in respect to that work, the items are approved for return to service.

15. Authorized Signature:	16. Approval/Authorization No.:	20. Authorized Signature:	21. Approval/Certificate No.:
Johnny Gl	ODA-100129-CE		
17. Name (Typed or Printed):	**18. Date (m/d/y):**	**22. Name (Typed or Printed):**	**23. Date (m/d/y):**
JOHNNY GLOVER	JUL/19/2013		

User / Installer Responsibilities

It is important to understand that the existence of this document alone does not automatically constitute authority to install the part/component/assembly. Where the user/installer performs work in accordance with the national regulations of an airworthiness authority different than the airworthiness authority of the country specified in Block 1, it is essential that the user/installer ensures that his/her airworthiness authority accepts parts/components/assemblies from the airworthiness authority of the country specified in Block 1.
Statements in Blocks 14 and 19 do not constitute installation certification. In all cases, aircraft maintenance records must contain an installation certification issued in accordance with the national regulations by the user/installer before the aircraft may be flown.

FAA Form 8130-3 (6-01) * Installer must cross-check eligibility with applicable technical data. NSN: 0052-00-012-9005

1. Approving Civil Aviation Authority/Country:	2.	3. Form Tracking Number:
FAA/United States	**AUTHORIZED RELEASE CERTIFICATE** FAA Form 8130-3, AIRWORTHINESS APPROVAL TAG	0071465045-00001
4. Organization Name and Address:	Beechcraft Beechcraft Corporation 801 Industrial Blvd. Suite 100 Grapevine, TX 76051 — FAA Production Certificate No 8	5. Work Order/Contract/Invoice Number: 0000514200-000010

6. Item:	7. Description:	8. Part Number:	9. Quantity:	10. Serial Number:	11. Status/Work:
1	NUT, SELF-LOCKING, H	MS21046C4	50.000	N/A	NEW

12. Remarks:

AIRWORTHINESS APPROVAL

Photocopie effectuee le 26/03/2018
au titre d'un delaissement de 2 piece(s)
sur un total de 20000 pieces
par NLC de la societe ATIS

Photocopie effectuee le
au titre de piece(s)
par ATIS

ATIS OE
FR.145.666
DDU

13a. Certifies the items identified above were manufactured in conformity to:

☒ Approved design data and are in a condition for safe operation.
☐ Non-approved design data specified in Block 12.

14a. ☒ 14 CFR 43.9 Return to service ☐ Other regulation specified in Block 12

Certifies that unless otherwise specified in Block 12 the work identified in Block 11 and described in Block 12 was accomplished in accordance with Title 14, Code of Federal Regulations, part 43 and in respect to that work, the items are approved for return to service.

13b. Authorized Signature:	13c. Approval/Authorization No.:	14b. Authorized Signature:	14c. Approval/Certificate No.:
	ODA-230339-CE		
13d. Name (Typed or Printed): Timmy Shurley	13e. Date (dd/mmm/yyyy): 10/JAN/2015	14d. Name (Typed or Printed):	14e. Date (dd/mmm/yyyy):

User/Installer Responsibilities

It is important to understand that the existence of this document alone does not automatically constitute authority to install the aircraft engine/propeller/article.

Where the user/installer performs work in accordance with the national regulations of an airworthiness authority different than the airworthiness authority of the country specified in Block 1, it is essential that the user/installer ensures that his/her airworthiness authority accepts aircraft engine(s)/propeller(s)/article(s) from the airworthiness authority of the country specified in Block 1.

Statements in Blocks 13a and 14a do not constitute installation certification. In all cases, aircraft maintenance records must contain an installation certification issued in accordance with the national regulations by the user/installer before the aircraft may be flown.

(15)

MONROE AEROSPACE

CERTIFICATE OF CONFORMITY

NO: 585056

BILL TO:	SHIP TO:
ATIS ACCTS. PAYABLE ZONE AVIATION GENERALE-AEROPORT LE LAMENTIN, MARTINOQUE 97232	ATIS ATTN: RECIEVING ZONE AVIATION GENERALE-AEROPORT LE LAMENTIN, MARTINOQUE 97232

CUSTOMER PO	SHIP DATE	AIRWAY BILL/TRACKING #
CF598		665765272406

PART NO:	Description	CND	QTY	S/L		
AN919-3D	REDUCER	NE	8	30	LOT: 8142	MFR: INLAND MACHINE
AN960-8	Customer Reference: WASHER	NE	200	45	LOT: Y4658	MFR: ANILLO
NAS1149F0363P	Customer Reference: WASHER	NE	200	1	LOT: SA4633	MFR: ANILLO
AN960-516	Customer Reference: WASHER	NE	200	57	LOT: SA6173	MFR: ANILLO
MS24694S95	Customer Reference: STRUCTURAL SCREW	NE	100	17	LOT: 52603	MFR: LFC
44PN REV: N/A	Customer Reference: CLEAR TUBING	NE	150	30	LOT: 11203312	MFR: FLOWLINE
261N04	Customer Reference: NYLON NUT/SLEEVE	NE	10	46	LOT: 10964379	MFR: GHX
262N04	Customer Reference: NYLON UNION	NE	5	30	LOT: 10964379	MFR: GHX
265N04	Customer Reference: NYLON UNION/ELBOW	NE	4	21	LOT: 10964379	MFR: GHX
CR3213-4-02	Customer Reference: CHERRY RIVET	NE	200	342	LOT: 88052451	MFR: CHERRY
CR3213-4-03	Customer Reference: CHERRY RIVET	NE	200	209	LOT: 86089214	MFR: CHERRY
	Customer Reference:					

CONDITIONS: NE - New OH-OVERHAULED RP-REPAIRED SV-SERVICEABLE

We hereby certify that the items that are a part of this Purchase Order have been visually & dimensionally found to conform to all applicable standards, drawings & specifications. The liability of ECAS, LLC is limited to replacement of any item which is rejected because of a defect in material or workmanship if notified within 30 days & liability shall not exceed the invoice value. Such replacement shall constitute satisfaction of all liability.

SIGNED:

For and on behalf of ECAS, LLC dba MONROE AEROSPACE

ECAS, LLC dba MONROE AEROSPACE
399 EAST DRIVE MELBOURNE, FL 32904 PH: 800.330.3975

Photocopie effectuée le 20/09/2018
au titre d'un délotissement de 2 pièce(s)
sur un total de 200 pièces
par NAE de la société ATIS

ANILLO *Industries, Inc.*
2090 NORTH GLASSELL STREET, ORANGE, CA 92865-3391 USA
PLEASE REMIT TO
P.O. BOX 5586 ORANGE, CA 92863-5586 USA
(714)637-7000 (562)924-6632 FAX(714) 637-3022 CAGE CODE: 10630

AS9100 NADCAP CP ISO 9001 CERTIFIED

579925

Packing List & Certification

WE ACCEPT VISA/MASTER/DISCOVER/AMEX

D

SOLD TO 3174
EAST COAST AVIATION SUPPLIES
ATTN: ACCOUNTS PAYABLE DEPT.
399 EAST DRIVE

MELBOURNE, FL 32904

SHIP TO
ECAS WEST
7540 DEAN MARTIN DRIVE
506/507
LAS VEGAS,NV 89139

DATE ORDER REC'D	ORDER NUMBER	INVOICE DATE	SHIPPED VIA	TERMS
12/09/2014	10048-NV		UPS GRND 3165E0	1% 10 DAYS, NET 30

ITEM	ORDERED	SHIPPED	DESCRIPTION	NET WEIGHT
1	250,000	250,000	AN960-6 REV 21 /LOT#Y3246 /QCR:1,4,6,8,15,30, NAS1149FN632P ECCN: 9A991 Schedule B#: 7318.22.0000 COO: USNLR	
2	250,000	171,705	AN960-6L REV 21 /LOT#Y2869 /QCR:1,4,6,8,15,30, NAS1149FN616P ECCN: 9A991 Schedule B#: 7318.22.0000 COO: USNLR	
4	100,000	100,000	AN960-8L REV 21 /LOT#Y3407 /QCR:1,4,6,8,15,30, NAS1149FN816P ECCN: 9A991 Schedule B#: 7318.22.0000 COO: USNLR	
5	500,000	500,000	AN960-10 REV 21/SA4633/Y3242 /QCR:1,4,6,8,15,30, NAS1149D0363P ECCN: 9A991 Schedule B#: 7318.22.0000 COO: USNLR	
7	250,000	250,000	AN960-416 REV 21 /LOT#SA4335 /QCR:1,4,6,8,15,30, NAS1149F0463P ECCN: 9A991 Schedule B#: 7318.22.0000 COO: USNLR	
8	100,000	100,000	AN960-516 REV 21 /LOT#Y4656 /QCR:1,4,6,8,15,30, NAS1149F0563P ECCN: 9A991 Schedule B#: 7318.22.0000 COO: USNLR	

We certify that 1. item number 1,2,4,5,7,8 above is manufactured in accordance with the material and processing specifications of this order.
2. We certify that the material on this order conforms in all respects to the current applicable government and/or manufacturer's specification. Test reports are on file and are available for examination on all Anillo manufactured parts. All claims for errors or shortages must be made within 10 days after receipt of goods. No good to be returned without written authorization. All claims for defective material must filed within 30 days of shipment to receive consideration. We do not assume financial responsibility or liability from the use of products sold, other than the replacement value of the products sold, if claimed within the specified time limit above.

<< R.M.A.# REQUIRED FOR RETURNS >> << TO THE BEST OF OUR KNOWLEDGE, PARTS ARE MERCURY FREE >>

Certification

STAMP 22 DATE 12-11-14

DFAR DOES NOT APPLY
ANILLO IND. (CageCode: 10630)
Part #: AN960-10
Quantity: 355639
P.O.#: 10048-NV
LOT#: SA4633
ITEM#: 5 REV. 21
Packed By: NB

ANILLO IND. (CageCode: 10630)
Part #: AN960-10
Quantity: 144361
P.O.#: 10048-NV
LOT#: Y3242
ITEM#: 5 REV. 21
Packed By: NB

BY Ben Omidwar
Ben Omidwar, Quality Assurance Manager

FI 4.03.05

1. Approving Civil Aviation Authority/Country: FAA/United States	2. **AUTHORIZED RELEASE CERTIFICATE** FAA Form 8130-3, AIRWORTHINESS APPROVAL TAG	3. Form Tracking Number: 7364799649 1000000040494811

4. Organization Name and Address:	5. Work Order/Contract/Invoice Number:
AVIALL SERVICES INC. 2750 REGENT BLVD DFW AIRPORT, TX 75261	680

6. Item:	7. Description:	8. Part Number:	9. Quantity:	10. Serial Number:	11. Status/Work:
1.	GASKET- MAGNETO	LW-12681	20	N/A	NEW

Photocopie effectuée le 21/03/2018
au titre d'un délotissement de 2 pièce(s)
sur un total de 20 pièces
par NBC de la société ATIS

12. Remarks:

MQ
THE
2107

THE PRODUCT(S)/ARTICLE(S) SHIPPED UNDER THIS APPROVAL WERE PRODUCED BY LYCOMING ENGINES.

SHELF LIFE EXPIRATION DATE: 01 APR 2022

13a. Certifies the items identified above were manufactured in conformity to:

- ☒ Approved design data and are in a condition for safe operation.
- ☐ Non-approved design data specified in Block 12.

~~14a. ☐ 14 CFR 43.9 Return to Service ☐ Other regulation specified in Block 12 Certifies that unless otherwise specified in Block 12, the work identified in Block 11 and described in Block 12 was accomplished in accordance with Title 14, Code of Federal Regulations, part 43 and in respect to that work, the items are approved for return to service.~~

13b. Authorized Signature:	13c. Approval/Authorization No.:	~~14b. Authorized Signature:~~	~~14c. Approval/Certificate No.:~~
	DART-700136-SW		
13d. Name (Typed or Printed):	**13e. Date (dd/mmm/yyyy):**	**~~14d. Name (Typed or Printed):~~**	**~~14e. Date (dd/mmm/yyyy):~~**
J.R. Hofmann	25 MAR 2018		

User/Installer Responsibilities

It is important to understand that the existence of this document alone does not automatically constitute authority to install the aircraft engine/propeller/article. Where the user/installer performs work in accordance with the national regulations of an airworthiness authority different than the airworthiness authority of the country specified in Block 1, it is essential that the user/installer ensures that his/her airworthiness authority accepts aircraft engine(s)propeller(s)/ article(s) from the airworthiness authority of the country specified in the Block 1. Statements in Blocks 13a and 14a do not constitute installation certification. In all cases, aircraft maintenance records must contain an installation certification issued in accordance with the national regulations by the user/installer before the aircraft may be flown.

16

1. Approving Civil Aviation Authority/Country:	2. AUTHORIZED RELEASE CERTIFICATE FAA FORM 8130-3,AIRWORTHINESS APPROVAL TAG	3. Form Tracking Number
FAA/UNITED STATES		MS-496602

4. Organization Name and Address:
LYCOMING ENGINES
652 OLIVER STREET
WILLIAMSPORT, PA 17701
PRODUCTION CERTIFICATE #3

5. Work Order/Contract/ Invoice Number: 156760/4887183

6.Item:	7. Description:	8. Part Number:	9. Quantity:	10. Serial Number:	11. Status/ Work:
1.1	BEARING - CONNECTING ROD	18N26106	00200	N/A	NEW

12. Remarks: AIRWORTHINESS APPROVAL PARTS
AVIALL INC
United States

13a. Certifies the items identified above were manufactured in conformity to:
X Approved design data and are in a condition for safe operation.
_ Non-approved design data specified in Block 12.

14a. _14CFR 43.9 Return to Service _Other regulation specified in Block 12
Certifies that unless otherwise specified in Block 12, the work identified in block 11 and described in Block 12 was accomplished in accordance with Title 14 Code of Federal Regulations, Part 43 and in respect to that work, the items are approved for return to service

13b. Authorized Signature	13c. Approval/Authorization No.	14b. Authorized Signature	14c. Approval/Certificate:
	ODA830878NE		
13d. Name (Typed or Printed):	**13e. Date(dd/mmm/yyyy):**	**14d. Name (Typed or Printed):**	**14e. Date(dd/mmm/yyyy):**
T. STROUD	01 MAR 2018		

User/Installer Responsibilities

It is important to understand that the existence of this document alone does not automatically constitute authority to install aircraft engine/propeller/article.

Where the user/installer performs work in accordance with the national regulations of an airworthiness authority different than the airworthiness authority of the country specified in Block 1, it is essential that the user/installer ensures that his/her airworthiness authority accepts aircraft engine/propeller/article from the airworthiness authority of the country specified in Block 1.

Statements in Blocks 13a and 14a do not constitute installation certification. In all cases, aircraft maintenance records must contain an installation certification issued in accordance with the national regulations by the user/installer before the aircraft may be flown.

FAA Form 8130-3 (02-14) *Installer must cross check eligibility with applicable technical data.

---

1. Approving Civil Aviation Authority/Country:	2. AUTHORIZED RELEASE CERTIFICATE FAA FORM 8130-3, AIRWORTHINESS APPROVAL TAG	3. Form Tracking Number
FAA/UNITED STATES		MS-496602

4. Organization Name and Address:
LYCOMING ENGINES
652 OLIVER STREET
WILLIAMSPORT, PA 17701
PRODUCTION CERTIFICATE #3

5. Work Order/Contract/ Invoice Number: 156760/4887183

6.Item:	7. Description:	8. Part Number:	9. Quantity:	10. Serial Number:	11. Status/ Work:
2.1	GASKET-V BAND COUPLING 2.25	78246 SUPPLIER PART NO: 17189-225N	00010	N/A	NEW

12. Remarks: AIRWORTHINESS APPROVAL PARTS
AVIALL INC
United States

13a. Certifies the items identified above were manufactured in conformity to:
X Approved design data and are in a condition for safe operation.
_ Non-approved design data specified in Block 12.

14a. _14CFR 43.9 Return to Service _Other regulation specified in Block 12
Certifies that unless otherwise specified in Block 12, the work identified in block 11 and described in Block 12 was accomplished in accordance with Title 14 Code of Federal Regulations, Part 43 and in respect to that work, the items are approved for return to service

13b. Authorized Signature:	13c. Approval/Authorization No.	14b. Authorized Signature:	14c. Approval/Certificate:
	ODA830878NE		
13d. Name (Typed or Printed):	**13e. Date(dd/mmm/yyyy):**	**14d. Name (Typed or Printed):**	**14e. Date(dd/mmm/yyyy):**
T. STROUD	01 MAR 2018		

User/Installer Responsibilities

It is important to understand that the existence of this document alone does not automatically constitute authority to install aircraft engine/propeller/article.

Where the user/installer performs work in accordance with the national regulations of an airworthiness authority different than the airworthiness authority of the country specified in Block 1, it is essential that the user/installer ensures that his/her airworthiness authority accepts aircraft engine/propeller/article from the airworthiness authority of the country specified in Block 1.

Statements in Blocks 13a and 14a do not constitute installation certification. In all cases, aircraft maintenance records must contain an installation certification issued in accordance with the national regulations by the user/installer before the aircraft may be flown.

FAA Form 8130-3 (02-14) *Installer must cross check eligibility with applicable technical data.

---

1. Approving Civil Aviation Authority/Country:	2. AUTHORIZED RELEASE CERTIFICATE FAA FORM 8130-3, AIRWORTHINESS APPROVAL TAG	3. Form Tracking Number
FAA/UNITED STATES		MS-496602

4. Organization Name and Address:
LYCOMING ENGINES
652 OLIVER STREET
WILLIAMSPORT, PA 17701
PRODUCTION CERTIFICATE #3

5. Work Order/Contract/ Invoice Number: 156760/4887183

6.Item:	7. Description:	8. Part Number:	9. Quantity:	10. Serial Number:	11. Status/ Work:
4.1	GASKET-MAGNETO	LW-12881	02000	N/A	NEW

12. Remarks: AIRWORTHINESS APPROVAL PARTS
AVIALL INC
United States

13a. Certifies the items identified above were manufactured in conformity to:
X Approved design data and are in a condition for safe operation.
_ Non-approved design data specified in Block 12.

14a. _14CFR 43.9 Return to Service _Other regulation specified in Block 12
Certifies that unless otherwise specified in Block 12, the work identified in block 11 and described in Block 12 was accomplished in accordance with Title 14 Code of Federal Regulations, Part 43 and in respect to that work, the items are approved for return to service

13b. Authorized Signature:	13c. Approval/Authorization No.	14b. Authorized Signature:	14c. Approval/Certificate:
	ODA830878NE		
13d. Name (Typed or Printed):	**13e. Date(dd/mmm/yyyy):**	**14d. Name (Typed or Printed):**	**14e. Date(dd/mmm/yyyy):**
T. STROUD	01 MAR 2018		

User/Installer Responsibilities

It is important to understand that the existence of this document alone does not automatically constitute authority to install aircraft engine/propeller/article.

Where the user/installer performs work in accordance with the national regulations of an airworthiness authority different than the airworthiness authority of the country specified in Block 1, it is essential that the user/installer ensures that his/her airworthiness authority accepts aircraft engine/propeller/article from the airworthiness authority of the country specified in Block 1.

Statements in Blocks 13a and 14a do not constitute installation certification. In all cases, aircraft maintenance records must contain an installation certification issued in accordance with the national regulations by the user/installer before the aircraft may be flown.

FAA Form 8130-3 (02-14) *Installer must cross check eligibility with applicable technical data.

---

1. Approving Civil Aviation Authority/Country:	2. AUTHORIZED RELEASE CERTIFICATE FAA FORM 8130-3, AIRWORTHINESS APPROVAL TAG	3. Form Tracking Number
FAA/UNITED STATES		

4. Organization Name and Address:

5. Work Order/Contract/ Invoice Number:

6.Item:	7. Description:	8. Part Number:	9. Quantity:	10. Serial Number:	11. Status/ Work:

12. Remarks

13a. Certifies the items identified above were manufactured in conformity to:
_Approved design data and are in a condition for safe operation.
_Non-approved design data specified in Block 12.

14a. _14CFR 43.9 Return to Service _Other regulation specified in Block 12
Certifies that unless otherwise specified in Block 12, the work identified in block 11 and described in Block 12 was accomplished in accordance with Title 14 Code of Federal Regulations, Part 43 and in respect to that work, the items are approved for return to service

13b. Authorized Signature:	13c. Approval/Authorization No.	14b. Authorized Signature:	14c. Approval/Certificate:
	ODA830878NE		
13d. Name (Typed or Printed):	**13e. Date(dd/mmm/yyyy):**	**14d. Name (Typed or Printed):**	**14e. Date(dd/mmm/yyyy):**

User/Installer Responsibilities

It is important to understand that the existence of this document alone does not automatically constitute authority to install aircraft engine/propeller/article.

Where the user/installer performs work in accordance with the national regulations of an airworthiness authority different than the airworthiness authority of the country specified in Block 1, it is essential that the user/installer ensures that his/her airworthiness authority accepts aircraft engine/propeller/article from the airworthiness authority of the country specified in Block 1.

Statements in Blocks 13a and 14a do not constitute installation certification. In all cases, aircraft maintenance records must contain an installation certification issued in accordance with the national regulations by the user/installer before the aircraft may be flown.

FAA Form 8130-3 (02-14) *Installer must cross check eligibility with applicable technical data.

AVIALL - TRUE COPY - 03/15/2018 - TSEN - 00479645

Packing List

McFarlane Aviation, Inc.
696 E. 1700 Road
Baldwin City, KS 66006
7855942741

McFarlane

McFarlane Aviation Products

Shipping Number: 0306574
Ship Date: 4/20/2018

Order Number: 0189569
Order Date: 4/16/2018
Salesperson: SARA
Customer Number: AVI5209

Sold To:
AVIALL SERVICES INC
ATTN: AP DEPARTMENT
PO BOX 619048
DALLAS, TX 75261-9048

Ship To:
AVIALL CENTRAL WAREHOUSE
2750 REGENT BLVD
DALLAS CDC
DFW AIRPORT, TX 75261

Confirm To:
SEDRICK

Number of Packages 1
Tracking # 780608546992;

Customer P. O.	Ship VIA	F. O. B.	Terms
45885194	FEDEX GROUND	BALDWIN CITY	NET 45 DAYS

Item Number	Unit	Ordered	Shipped	Backordered	Applicable Quality Clauses
JMBZMS	EACH	1.000	1.000	0.000	4,8,10
MAIN STRUT SEAL KIT **Lot Number:** PO28483-2					
H65846-00	EACH	1.000	1.000	0.000	4,6,8,10
PLATE, Placard, Engine Control **Lot Number:** PO28549-2					
62371-108	EACH	1.000	1.000	0.000	4,6,8,10
HINGE, Aileron **Lot Number:** PO28485-1					
MC0550180-16	EACH	1.000	1.000	0.000	1,4,5,6,10
SHAFT (Carb. Heat) **Lot Number:** 48503					

ITEM H65846-00=2M

BATCH 7364842109

SSOMSANIT
04/25/18

AVIALL - TRUE CERTIFIED COPY - 04/27/2018 - CHOOPER - 7364842109

91

17-2

McFarlane Aviation, Inc.
696 E. 1700 Road
Baldwin City, KS 66006
7855942741

McFarlane

Ship Date: 4/20/2018
Shipping Number: 0306574

Certificate of Conformance

Supporting documentation for items on this invoice are on file and available for review (subject to McFarlane Aviation, Inc. data policies). Records for items manufactured by McFarlane Aviation, Inc. include materials utilized during production, adherence to established processing procedures, in-process and final inspection results, and calibrated gauges used for acceptance.

Supporting documentation for distributed items (parts not manufactured by McFarlane Aviation, Inc.) includes a line of traceability to the original manufacturer and may include certification from the original manufacturer to required standards, materials, or special processes as applicable to the item.

These records will be maintained for 10 years minimum as per the McFarlane Quality Assurance Manual and Federal Aviation Regulation 14 CFR Part 21.137(k).

Items on this invoice also have applicable quality clauses identified that apply to each specific line item part number. Corresponding quality clauses are listed below:

Quality Clauses

1. The items on this invoice identified as clause 1 fully conform to McFarlane Aviation, Inc. approved design data.
2. The items on this invoice identified as clause 2 were manufactured using materials and procedures that conform to McFarlane Aviation, Inc. approved processes.
3. The items on this invoice identified as clause 3 fully conform to customer supplied data.
4. The items on this invoice identified as clause 4 fully conform with customer purchase order requirements.
5. The items on this invoice identified as clause 5 were proudly manufactured by McFarlane Aviation, Inc. in the United States of America by employees that are dedicated to Quality and our customer's safety and satisfaction. (Items not produced by McFarlane Aviation, Inc. may or may not be made in the USA).
6. The items on this invoice identified as clause 6 conform to one of the following approvals which will be clearly identified on the part or packaging:
   - FAA-PMA items conform to design data that was submitted and approved by the FAA on the associated PMA supplement for the associated article. McFarlane Aviation, Inc. manufactured FAA PMA articles are manufactured under FAA Parts Manufacturer Approval number PQ3732CE. Supplements can be downloaded from the McFarlane website at http://www.mcfarlaneaviation.com/reference/
   - FAA-STC items are approved on the basis of an FAA Supplemental Type Certificate.
   - FAA-TSO items are approved on the basis of an FAA Technical Standard Order Authorization.
   - CASA-PMA items are listed on an Australian PMA Supplement.
   - FAA-TC Items are OEM produced items that are produced under the original FAA Type Certificate.
7. The items on this invoice identified as clause 7 is a part or material that conforms to an established industry or U.S. government published specification.
8. The items on this invoice identified as clause 8 are distributed parts that are not manufactured by McFarlane Aviation, Inc.
9. The items on this invoice identified as clause 9 are kits that contain FAA approved articles and/or standard hardware. Some kits also contain articles such as tools, which do not require FAA approval.
10. The items on this invoice identified as clause 10 are new and unused.

Dana Yarnell
Quality Assurance Manager

AVIALL - TRUE CERTIFIED COPY - 04/27/2018 - CHOOPER - 7364842109

91

Printed on 07/05/2018 12:42
by Nicolas Dubou Phn +596 596 524 005 Fax +596 596 38 1

AMC

SERVICEABLE

MATERIAL

P/N	**H65846-00**
S/N / Batch	**PASTINC-F995786**
Descrip.	PLATE: PLACARD,ENGINE CON
Qty. 1	Owner: ATISAWAK
ATIS	**PI00**

PAR-896

GRN: MREC 1218-1

CONSULT AMS TO GET THE LATEST SITUATION

LAST CERTIFICATION

DATE 27/04/2018 SLL NEVER

REF. AVIALL-7364842109

	TS (FH)	CS (FC)
INS	0	0
OHL	0	0
NEW	0	0

FORM AMS/30152 REV 02

1. Approving Civil Aviation Authority/Country: FAA/United States	2. **AUTHORIZED RELEASE CERTIFICATE** FAA Form 8130-3, AIRWORTHINESS APPROVAL TAG	3. Form Tracking Number: 7364842109 1000000041599771

4. Organization Name and Address:	5. Work Order/Contract/Invoice Number:
AVIALL SERVICES INC. 2750 REGENT BLVD DFW AIRPORT, TX 75261	1141

6. Item:	7. Description:	8. Part Number:	9. Quantity:	10. Serial Number:	11. Status/Work:
1.	PLATE, PLACARD, ENGINE CONTROL	H65846-00	1	N/A	NEW

12. Remarks:

MQ
COL
0813

B/N:PO28549-2

THIS PMA PART IS NOT A CRITICAL COMPONENT.
THE PRODUCT(S)/ARTICLE(S) SHIPPED UNDER THIS APPROVAL WERE PRODUCED BY MCFARLANE AVIATION PRODUCTS.

ATIS OE
FR.145.566
DDU

13a. Certifies the items identified above were manufactured in conformity to:		14a. ☐ 14 CFR 43.9 Return to Service ☐ Other regulation specified in Block 12 Certifies that unless otherwise specified in Block 12, the work identified in Block 11 and described in Block 12 was accomplished in accordance with Title 14, Code of Federal Regulations, part 43 and in respect to that work, the items are approved for return to service.	
☒ Approved design data and are in a condition for safe operation. ☐ Non-approved design data specified in Block 12.			
13b. Authorized Signature: Thomas C. Willis	13c. Approval/Authorization No.: 127604222	14b. Authorized Signature:	14c. Approval/Certificate No.:
13d. Name (Typed or Printed): Thomas Willis	13e. Date (dd/mmm/yyyy): 27 APR 2018	14d. Name (Typed or Printed):	14e. Date (dd/mmm/yyyy):

User/Installer Responsibilities

It is important to understand that the existence of this document alone does not automatically constitute authority to install the aircraft engine/propeller/article. Where the user/installer performs work in accordance with the national regulations of an airworthiness authority different than the airworthiness authority of the country specified in Block 1, it is essential that the user/installer ensures that his/her airworthiness authority accepts aircraft engine(s)propeller(s)/ article(s) from the airworthiness authority of the country specified in the Block 1. Statements in Blocks 13a and 14a do not constitute installation certification. In all cases, aircraft maintenance records must contain an installation certification issued in accordance with the national regulations by the user/installer before the aircraft may be flown.

1. Approving Civil Aviation Authority/Country: FAA/United States	2. **AUTHORIZED RELEASE CERTIFICATE** FAA Form 8130-3, AIRWORTHINESS APPROVAL TAG	3. Form Tracking Number: 7364813080 1000000040494807

4. Organization Name and Address:	5. Work Order/Contract/Invoice Number:
AVIALL SERVICES INC. 2750 REGENT BLVD DFW AIRPORT, TX 75261	680

6. Item:	7. Description:	8. Part Number:	9. Quantity:	10. Serial Number:	11. Status/Work:
1.	COMPASS HOUSING ASSEMBLY	H79600-00	1	N/A	NEW

12. Remarks:

MQ
LOR
0712

L/N: PO26975-41

ATIS OE
FR.145.566
DDU

THIS COMPASS HOUSING ASSEMBLY IS A SUBCOMPONENT OF AN FAA PMA ARTICLE.THIS PMA PART IS NOT A CRITICAL COMPONENT.
THE PRODUCT(S)/ARTICLE(S) SHIPPED UNDER THIS APPROVAL WERE PRODUCED BY MCFARLANE.

13a. Certifies the items identified above were manufactured in conformity to:		14a. ☐ 14 CFR 43.9 Return to Service ☐ Other regulation specified in Block 12 Certifies that unless otherwise specified in Block 12, the work identified in Block 11 and described in Block 12 was accomplished in accordance with Title 14, Code of Federal Regulations, part 43 and in respect to that work, the items are approved for return to service.	
☒ Approved design data and are in a condition for safe operation. ☐ Non-approved design data specified in Block 12.			
13b. Authorized Signature: David Burke	13c. Approval/Authorization No.: DART-700704-SW	14b. Authorized Signature:	14c. Approval/Certificate No.:
13d. Name (Typed or Printed): David Burke	13e. Date (dd/mmm/yyyy): 26 MAR 2018	14d. Name (Typed or Printed):	14e. Date (dd/mmm/yyyy):

User/Installer Responsibilities

It is important to understand that the existence of this document alone does not automatically constitute authority to install the aircraft engine/propeller/article. Where the user/installer performs work in accordance with the national regulations of an airworthiness authority different than the airworthiness authority of the country specified in Block 1, it is essential that the user/installer ensures that his/her airworthiness authority accepts aircraft engine(s)propeller(s)/ article(s) from the airworthiness authority of the country specified in the Block 1. Statements in Blocks 13a and 14a do not constitute installation certification. In all cases, aircraft maintenance records must contain an installation certification issued in accordance with the national regulations by the user/installer before the aircraft may be flown.

(16)

18-2

Packing List

McFarlane Aviation, Inc.
696 E. 1700 Road
Baldwin City, KS 66006
7855942741

McFarlane

McFarlane Aviation Products

Shipping Number: 0303347
Ship Date: 3/19/2018

Order Number: 0187502
Order Date: 3/13/2018
Salesperson: SARA
Customer Number: AVI5209

Sold To:
AVIALL SERVICES INC
ATTN: AP DEPARTMENT
PO BOX 619048
DALLAS, TX 75261-9048

Ship To:
AVIALL CENTRAL WAREHOUSE
2750 REGENT BLVD
DALLAS CDC
DFW AIRPORT, TX 75261

Confirm To:
SEDRICK

Number of Packages 1
Tracking # 780148361530;

Customer P. O.	Ship VIA	F. O. B.	Terms
45862874	FEDEX GROUND	BALDWIN CITY	NET 45 DAYS

Item Number	Unit	Ordered	Shipped	Backordered	Applicable Quality Clauses
H79600-00 COMPASS HOUSING ASSEMBLY **Lot Number:** PO26975-41	EACH	1.000	1.000	0.000	4,6,8,10
TLSL-KT-1 STOP LUG KIT, Torque Link	EACH	1.000	0.000	1.000	1,4,5,9,10
AN3-3A BOLT, 3/16 Undrilled	EACH	2.000	0.000	2.000	4,7,8,10
MC0442506-8 STOP LUG, Torque Link	EACH	1.000	0.000	1.000	1,4,5,6,10
MC0442506-9 SAFETY PLATE, Stop Lug, Torque	EACH	1.000	0.000	1.000	1,4,5,6,10
Part numbers listed without pricing are included in the price of the kit listed above.					
MC69790-00 BUSHING ASSEMBLY **Lot Number:** 46386	EACH	10.000	10.000	0.000	1,4,5,6,10
9851097-1 SEAL **Lot Number:** PO25836-2	EACH	6.000	6.000	0.000	4,6,8,10

ITEM H79600-00=2M

BATCH 7364813080

LRAMSEY
03/23/18

AVIALL - TRUE CERTIFIED COPY - 03/26/2018 - LSCOTT - 7364813080

(16)

18-3

McFarlane Aviation, Inc.
696 E. 1700 Road
Baldwin City, KS 66006
7855942741

McFarlane

Ship Date: 3/19/2018
Shipping Number: 0303347

Certificate of Conformance

Supporting documentation for items on this invoice are on file and available for review (subject to McFarlane Aviation, Inc. data policies). Records for items manufactured by McFarlane Aviation, Inc. include materials utilized during production, adherence to established processing procedures, in-process and final inspection results, and calibrated gauges used for acceptance.

Supporting documentation for distributed items (parts not manufactured by McFarlane Aviation, Inc.) includes a line of traceability to the original manufacturer and may include certification from the original manufacturer to required standards, materials, or special processes as applicable to the item.

These records will be maintained for 10 years minimum as per the McFarlane Quality Assurance Manual and Federal Aviation Regulation 14 CFR Part 21.137(k).

Items on this invoice also have applicable quality clauses identified that apply to each specific line item part number. Corresponding quality clauses are listed below:

Quality Clauses

1. The items on this invoice identified as clause 1 fully conform to McFarlane Aviation, Inc. approved design data.
2. The items on this invoice identified as clause 2 were manufactured using materials and procedures that conform to McFarlane Aviation, Inc. approved processes.
3. The items on this invoice identified as clause 3 fully conform to customer supplied data.
4. The items on this invoice identified as clause 4 fully conform with customer purchase order requirements.
5. The items on this invoice identified as clause 5 were proudly manufactured by McFarlane Aviation, Inc. in the United States of America by employees that are dedicated to Quality and our customer's safety and satisfaction. (Items not produced by McFarlane Aviation, Inc. may or may not be made in the USA).
6. The items on this invoice identified as clause 6 conform to one of the following approvals which will be clearly identified on the part or packaging:
   - FAA-PMA items conform to design data that was submitted and approved by the FAA on the associated PMA supplement for the associated article. McFarlane Aviation, Inc. manufactured FAA PMA articles are manufactured under FAA Parts Manufacturer Approval number PQ3732CE. Supplements can be downloaded from the McFarlane website at http://www.mcfarlaneaviation.com/reference/
   - FAA-STC items are approved on the basis of an FAA Supplemental Type Certificate.
   - FAA-TSO items are approved on the basis of an FAA Technical Standard Order Authorization.
   - CASA-PMA items are listed on an Australian PMA Supplement.
   - FAA-TC Items are OEM produced items that are produced under the original FAA Type Certificate.
7. ~~The items on this invoice identified as clause 7 is a part or material~~ that conforms to an established industry or U.S. government published specification.
8. The items on this invoice identified as clause 8 are distributed parts that are not manufactured by McFarlane Aviation, Inc.
9. The items on this invoice identified as clause 9 are kits that contain FAA approved articles and/or standard hardware. Some kits also contain articles such as tools, which do not require FAA approval.
10. The items on this invoice identified as clause 10 are new and unused.

Dana Yarnell
Quality Assurance Manager

AVIALL - TRUE CERTIFIED COPY - 03/26/2018 - LSCOTT - 7364813080

Printed on 03/04/2018 15:47
by Nicolas Dadou Phn +596 596 524905 Fax +596 596 381

A.M.C. SERVICEABLE

MATERIAL

P/N	**H79600-00**
S/N / Batch	**7363813080**
Descrip.	Housing, compass
Qty. 1	Owner: ATISAWAK
ATIS	**PI00**

PAR-826

GRN: MREC 1138-1

LAST CERTIFICATION

DATE 26/03/2018 SLL NEVER

REF. AVIALL-7364813080

	TS (FH)	CS (FC)
INS	0	0
OHL	0	0
NEW	0	0

FORM AMS/30152 REV 02

CONSULT AMS TO GET THE LATEST SITUATION

1. Approving Civil Aviation Authority/Country: FAA/United States	2. **AUTHORIZED RELEASE CERTIFICATE** FAA Form 8130-3, AIRWORTHINESS APPROVAL TAG	3. Form Tracking Number: 7364798070 1000000039904736

4. Organization Name and Address:	5. Work Order/Contract/Invoice Number:
AVIALL SERVICES INC. 2750 REGENT BLVD DFW AIRPORT, TX 75261	CF678

6. Item:	7. Description:	8. Part Number:	9. Quantity:	10. Serial Number:	11. Status/Work:
1.	COVER, ENGINE CONTROL	H67232-40-41	1	N/A	NEW

12. Remarks:

MQ
SYD
0418

B/N: PO27148-3

THIS PMA PART IS NOT A CRITICAL COMPONENT.
THE PRODUCT(S)/ARTICLE(S) SHIPPED UNDER THIS APPROVAL WERE PRODUCED BY MCFARLANE AVIATION, INC..

ATIS OE
FR.145.566
DDU

13a. Certifies the items identified above were manufactured in conformity to:		14a. ☐ 14 CFR 43.9 Return to Service ☐ Other regulation specified in Block 12 Certifies that unless otherwise specified in Block 12, the work identified in Block 11 and described in Block 12 was accomplished in accordance with Title 14, Code of Federal Regulations, part 43 and in respect to that work, the items are approved for return to service.	
☒ Approved design data and are in a condition for safe operation. ☐ Non-approved design data specified in Block 12.			
13b. Authorized Signature:	13c. Approval/Authorization No.: DART-700136-SW	14b. Authorized Signature:	14c. Approval/Certificate No.:
13d. Name (Typed or Printed): J.R. Hofmann	13e. Date (dd/mmm/yyyy): 07 MAR 2018	14d. Name (Typed or Printed):	14e. Date (dd/mmm/yyyy):

User/Installer Responsibilities

It is important to understand that the existence of this document alone does not automatically constitute authority to install the aircraft engine/propeller/article. Where the user/installer performs work in accordance with the national regulations of an airworthiness authority different than the airworthiness authority of the country specified in Block 1, it is essential that the user/installer ensures that his/her airworthiness authority accepts aircraft engine(s)propeller(s)/ article(s) from the airworthiness authority of the country specified in the Block 1. Statements in Blocks 13a and 14a do not constitute installation certification. In all cases, aircraft maintenance records must contain an installation certification issued in accordance with the national regulations by the user/installer before the aircraft may be flown.

(16)

15-2

Packing List

McFarlane Aviation, Inc.
696 E. 1700 Road
Baldwin City, KS 66006
7855942741

McFarlane

McFarlane Aviation Products

Shipping Number: 0301833
Ship Date: 3/1/2018

Order Number: 0186477
Order Date: 2/23/2018
Salesperson: SARA
Customer Number: AVI5209

Sold To:
AVIALL SERVICES INC
ATTN: AP DEPARTMENT
PO BOX 619048
DALLAS, TX 75261-9048

Ship To:
AVIALL CENTRAL WAREHOUSE
2750 REGENT BLVD
DALLAS CDC
DFW AIRPORT, TX 75261

Confirm To:
SEDRICK

Number of Packages 1
Tracking # 771665907358;

Customer P. O.	Ship VIA	F. O. B.	Terms
45851419	FEDEX GROUND	BALDWIN CITY	NET 45 DAYS

Item Number	Unit	Ordered	Shipped	Backordered	Applicable Quality Clauses
MC69790-00 BUSHING ASSEMBLY **Lot Number:** 46386	EACH	4.000	4.000	0.000	1,4,5,6,10
H67232-40-41 COVER, Engine Control **Lot Number:** PO27148-3	EACH	1.000	1.000	0.000	4,6,8,10

ITEM H67232-40-41=2M

BATCH 7364798070

LRAMSEY
03/06/18

(16)

18-3

McFarlane Aviation, Inc.
696 E. 1700 Road
Baldwin City, KS 66006
7855942741

McFarlane®

Ship Date: 3/1/2018
Shipping Number: 0301833

Certificate of Conformance

Supporting documentation for items on this invoice are on file and available for review (subject to McFarlane Aviation, Inc. data policies). Records for items manufactured by McFarlane Aviation, Inc. include materials utilized during production, adherence to established processing procedures, in-process and final inspection results, and calibrated gauges used for acceptance.

Supporting documentation for distributed items (parts not manufactured by McFarlane Aviation, Inc.) includes a line of traceability to the original manufacturer and may include certification from the original manufacturer to required standards, materials, or special processes as applicable to the item.

These records will be maintained for 10 years minimum as per the McFarlane Quality Assurance Manual and Federal Aviation Regulation 14 CFR Part 21.137(k).

Items on this invoice also have applicable quality clauses identified that apply to each specific line item part number. Corresponding quality clauses are listed below:

Quality Clauses

1. The items on this invoice identified as clause 1 fully conform to McFarlane Aviation, Inc. approved design data.
2. The items on this invoice identified as clause 2 were manufactured using materials and procedures that conform to McFarlane Aviation, Inc. approved processes.
3. The items on this invoice identified as clause 3 fully conform to customer supplied data.
4. The items on this invoice identified as clause 4 fully conform with customer purchase order requirements.
5. The items on this invoice identified as clause 5 were proudly manufactured by McFarlane Aviation, Inc. in the United States of America by employees that are dedicated to Quality and our customer's safety and satisfaction. (Items not produced by McFarlane Aviation, Inc. may or may not be made in the USA).
6. The items on this invoice identified as clause 6 conform to one of the following approvals which will be clearly identified on the part or packaging:
   - FAA-PMA items conform to design data that was submitted and approved by the FAA on the associated PMA supplement for the associated article. McFarlane Aviation, Inc. manufactured FAA PMA articles are manufactured under FAA Parts Manufacturer Approval number PQ3732CE. Supplements can be downloaded from the McFarlane website at http://www.mcfarlaneaviation.com/reference/
   - FAA-STC items are approved on the basis of an FAA Supplemental Type Certificate.
   - FAA-TSO items are approved on the basis of an FAA Technical Standard Order Authorization.
   - CASA-PMA items are listed on an Australian PMA Supplement.
   - FAA-TC Items are OEM produced items that are produced under the original FAA Type Certificate.
7. The items on this invoice identified as clause 7 is a part or material that conforms to an established industry or U.S. government published specification.
8. The items on this invoice identified as clause 8 are distributed parts that are not manufactured by McFarlane Aviation, Inc.
9. The items on this invoice identified as clause 9 are kits that contain FAA approved articles and/or standard hardware. Some kits also contain articles such as tools, which do not require FAA approval.
10. The items on this invoice identified as clause 10 are new and unused.

Dana Yarnell
Quality Assurance Manager

AVIALL - TRUE CERTIFIED COPY - 03/07/2018 - SPOGUE - 7364798070

20-1

ETA Global, Inc.
PO Box 259
Palestine TX 75802
United States

Phone:: 903-729-3131
Fax: 903-729-3180

etaGLOBAL

Pack Slip: 1743
1743

Packing Slip

Ship To:
AVIALL SERVICES (CONTRACT) 8418
2750 REGENT BLVD
DFW AIRPORT TX 75261
United States

Phone:
Fax:
Email:

Sold To:
AVIALL SERVICES (CONTRACT)
ATTN: ACCOUNTS PAYABLE
PO BOX 619048
DALLAS TX 75261
United States

Phone: 770-473-1346
Fax: 770/473-1346
Email:

Ship Date: 7/26/2017 F.O.B.:

Ship Via: Fed X Ground

Pack Line	Part Number/Description	Planned Qty	Shipped Qty	Rev	PO Line

Sales Order: 360881 Your PO: 45668725

Salesperson(s): JANIE RICHMOND

Line 1 Rel 1

1 PN: MS35206-234 Customer PN: Rev: PO Line: 10
Description: SCREW, MACHINE Customer PN Rev:
2,600.00 EA 2,600.00 EA

LOT:	49497800-04-02	**CURE DATE:**	N/A
MFG LOT:	88143	**EXP DATE:**	N/A
MFG:	CRESCENT MANUFACTURING CO	**COO:**	United States

ITEM MS35206-234=28

BATCH 7364610894

SSOMSANIT
07/27/17

Photocopie effectuée le 26/05/2018
au titre d'un délotissement de 1 pièce(s)
sur un total de 2600 pièces
par [illegible] de la société ATIS

ETA Global, Inc.
PO Box 259
Palestine TX 75802
United States

903-729-3131
903-729-3180

etaGLOBAL

Packing Slip

Pack Slip: 1743 **Sales Order: 360881** **Your PO: 45668725**

1743

*** CERTIFICATE OF CONFORMANCE ***

ETA Global certifies the products furnished on the above referenced order conform to applicable drawings, specifications and purchase order requirements. Supporting evidence is on file at ETA Global or the manufacturer and is available upon request, subject to a charge.

Larry Dever, Quality Manager 07/26/2017

Commercial or Surplus Product: When packing list identifies product as "Commercial" Supporting evidence may not be on file at ETA Global or the manufacturer. When packing list identifies product as "Surplus" it is sold in new, unused condition "as is" without traceability. IMPORTANCE NOTICE: LIMITATION OF REMEDIES: IF this product is proved to be defective, the exclusive remedy available and ETA's only obligation shall be to replace such quantity of this product which is proved to be defective or to refund the purchase price paid for this product. ALL CLAIMS FOR DEFECTIVE MATERIAL ARE WAIVED UNLESS MADE IN WRITING WITHIN 30 DAYS FROM THE DATE OF SHIPMENT. LIMITATION OF LIABILITIES: ETA shall not be liable for any damages, including incidental and/or consequential damage, regardless of the legal theory asserted, including negligence and/or strict liability. Before using, User shall determine the suitability of the product for intended use. User assumes all risk and liability whatsoever in connection therewith. CHECK CAREFULLY – Reference must be made to our delivery receipt register number when making claims or request for adjustment. ALL RETURN SUBJECT TO APPROVAL OF SELLER TO RETURN. The foregoing limitation of remedies and liabilities may not be altered unless in writing signed by the President of ETA GLOBAL, INC.

ATIS OE
FR.145.566
DDU

20-2

CUST PO NO	SO NO
494978	517634

FROM: BILD INDUSTRIES, INC. 800 CLEARWATER LOOP POST FALLS, ID 83854

SHIP TO
ETA GLOBAL, INC.
5500 WEST OAK ST.
PALESTINE TX 75801

CUST PO NO	SO NO
494978	517634

FROM: BILD INDUSTRIES, INC. 800 CLEARWATER LOOP POST FALLS, ID 83854

SHIP TO
ETA GLOBAL, INC.
5500 WEST OAK ST.
PALESTINE TX 75801

CUST PO NO	SO NO
494978	51763

FROM: BILD INDUSTRIES, INC. 800 CLEARWATER LOOP POST FALLS, ID 83854

ATIS OE
FR.145.566
DDU

SHIP TO
ETA GLOBAL, INC.
5500 WEST OAK ST.
PALESTINE TX 75801

CUSTOMER BILL TO ADDRESS	COMPLETE CUSTOMER PO NO.	BILL TO NO.	SHIP TO NO.	PAGE
ETA GLOBAL, INC. P.O. DRAWER 259 PALESTINE TX 750020259	494978		EGL001	1
	BUYER NAME & PHONE NO. JUDY/FAX			

PACKING INSPECTION

1910454962
ETA CTL#:49497800-04-02

LINE	LOC	QTY ORDERED	TOTAL QTY SHIPPED THIS ORDER		LOT	CUST. PO NO.	CUST. NO	DESCRIPTION
1		50000	50000	C	86861/14694-1EZ44 MS35206-245	494978	EGL001	SCREW Bx15=40
2		1	1	C	S/C FULL CERTS	494978	EGL001	CERTIFICATION
3		25000	10000	P	855317551179 MS24693S275	494978	EGL001	SCREW Bx67=32
								SHIP FOR STK OFAR
4		1	1	C	S/C FULL CERTS	494978	EGL001	CERTIFICATION
5		1	0		S/C FULL CERTS	494978	EGL001	CERTIFICATION
6		25000	10000	P	86202/88143 MS35206-234	494978	EGL001	SCREW Bx8=41
7		1	1	C	S/C FULL CERTS	494978	EGL001	CERTIFICATION
								SHIP FOR STK

RECEIVED NOV 02 2019

Thank you for your order

CERTIFICATION OF CONFORMANCE
I HEREBY CERTIFY THAT THE MERCHANDISE INCLUDED ON THIS PACKING LIST IS IN CONFORMANCE TH AN-MS-NAS OR APPLICABLE SPECIFICATIONS AND OR DRAWINGS.

CAGE CODE 31222

DATE: OCT 30 2019

QUALITY CONTROL MANAGER: Kaila K Jensen

TOTAL WT	NO CTNS		DATE SHIPPED	SHIPPED VIA
365	9	P = PARTIAL C = COMPLETE CC = CONSIDER COMPLETE CX = CANCEL	10/26/19	TLC

SIGNATURE - MERCHANDISE RECEIVED X

AVIALL - TRUE CERTIFIED COPY | 01/17/2018 | Ship #: 8005390363 | Line: 20 | 7364610894 | Qty: 100 | CPO: 1043997

Nº 88143

CERTIFICATE OF COMPLIANCE
TEST REPORT

FORM REV A 11/09

MADE IN THE U.S.A.

CUSTOMER NAME BILD INDUSTRIES

PART NO. MS35206-234 REV 3

PARTS CONTAINED IN THIS SHIPMENT HAVE BEEN MANUFACTURED AND INSPECTED IN ACCORDANCE WITH APPLICABLE DRAWINGS AND SPECIFICATIONS.

PHYSICAL PROPERTIES

TENSILE STRENGTH	HARDNESS	SCALE
1) 660.0 LB T	1)	
2) 662.0 LB T	2)	
3) 658.0 LB T	3)	
4) 663.0 LB T	4)	
5) 660.0 LB T	5)	
6) 668.0 LB T	6)	
7) 654.0 LB T	7)	
8) 673.0 LB T	8)	

OTHER TESTING:

1910454962
ETA CTL#:49497800-04-02

ADDITIONALLY, AN ANSI/ASQC Z 1.4 SAMPLE OF THE FINISHED FASTENERS WERE TESTED IN ACCORDANCE WITH APPLICABLE SPECIFICATIONS. SAMPLE PARTS AND THE TEST DATA ARE IN OUR RECORDS RETENTION AREA AS OBJECTIVE EVIDENCE AND WILL BE HELD AS REQUIRED.

PURCHASE ORDER NO. 86202

INTERNAL ROUTING NO. 40145

QUANTITY TWENTY FIVE THOUSAND FIVE HUNDRED

MATERIAL/SPECIFICATION .125 1018 STL TRU SPEC I-W38139

DATE 3/10/2015

CONFORMS TO THE PROCUREMENT SPECIFICATIONS OF:

FF-S-92B

OTHER MECHANICAL TEST DATA

☐ MEET MAGNETIC PERMEABILITY REQUIREMENTS OF FF-S-92B, MIL-I-17214B, AND ASTM A342/A 342M TEST METHOD 3.

PARTS ARE FREE FROM MERCURY AND ASBESTOS CONTAMINATION.

PART(S) COVERED UNDER THIS CERTIFICATION ARE CONFLICT MINERAL FREE AND IS/ARE IN COMPLIANCE WITH THE DODD-FRANK ACT.

VISUAL AND DIMENSIONAL INSPECTION SATISFACTORY.

FINISH

CAD TYPE 2 CLASS 3 PER AMS QQ-P-416 REV C

INSPECTED TO ZERO ACCEPTANCE SAMPLE / INDEX VALUE 2.5

Signature

BRIAN LESIEUR, QC MGR

CRESCENT MANUFACTURING OPERATING, CO.

Cage Code #63020
700 George Washington Turnpike, Burlington, CT 06013, U.S.A.
Telephone: (860) 673-2591 Fax:(860) 673-5973

AVIALL - TRUE CERTIFIED COPY | 01/17/2018 | Ship #: 8005390363 | Line: 20 | 7364610894 | Qty: 100 | CPO: 1043997

20-3

Tru-Spec Metals, Inc.

21 Commerce Drive – North Branford, CT – 888 484 5151 – Fax 888 484 5154

10/2/2014

We certify that the following material was supplied by **Tru-Spec Metals, Inc.** and shipped to **Crescent Manufacturing Company:**

Dia.	Grade	Temper	Quantity	Heat #	PO#	Producer
.125"	C1018	SAFS	1150#	IW38139	K14-146	Johnstown
.092"	C1018	SAIP	1036#	W34547	K14-191	Johnstown

Sincerely,

Linda MacLean

Linda MacLean
Tru-Spec Metals, Inc.

1910454962
ETA CTL#:49497800-04-02

CRESCENT MFG
P.O. NO. 38143

AVIALL - TRUE CERTIFIED COPY | 01/17/2018 | Ship #: 8005390363 | Line: 20 | 7364610894 | Qty: 100 | CPO: 1043997

TRU-SPEC METALS, INC.

Packing

21 Commerce Drive
North Branford, CT 06471
PH: 800-345-8473
FAX: 888-350-8404

Order #: S41510
Ship Date: 10/02/14
Page: 1

Bill to: CRESCENT MANUFACTURING
P O BOX 1350
BURLINGTON, CT 06013
USA

Ship to: CRESCENT MANUFACTURING
700 GEORGE WASHINGTON TPK
BURLINGTON, CT 06013
USA

Customer #	Customer Purchase Order #	Ship Terms	Branch	Salesperson
381	K14146	MID CITIES	2	

Transport #	BOL #

Item Number / Description	Heat/Lot	Net Wt
1018 .125 SAFS AKFG PHLU CHQ	TOTAL LB OF THIS PART IW38139	1150

1910454962
ETA CTL#:49497809-04-02

Special Instructions:

Total LBS: 1150

ISO 9001:2008 CERTIFIED
FED TAX I.D. #36-3307958

Office Copy

CRESCENT MFG
T.R. NO. 38143

AVIALL - TRUE CERTIFIED COPY | 01/17/2018 | Ship #: 8005390363 | Line: 20 | 7364610894 | Qty: 100 | CPO: 1043997

20-4

Johnstown Wire Technologies

124 Laurel Ave,
Johnstown, PA 15906

Phone: 814-532-5680
Fax: 814-532-5684

TEST REPORT

WORK ORDER 207299

LOT NUMBER I-W38139

SALES ORDER / RLS 158881 / 7

SOLD TO

Tru-Spec Metals, Inc.
21 Commerce Drive
North Branford, CT 06471
USA
Attn: QA Dept

CUSTOMER P.O.	CUSTOMER PART	QUANTITY	COILS	LADING NO	SHIPMENT DATE
P15823	C1018125FSPL	4,262 LBS	4	00125836	07/23/2014

SPECIFICATION Truspec-5723
AIR 4127 1018 Aluminum Killed Fine Grain Cold Heading Quality Spherodize Annealed At Finish Size PHOS & Lube Coated
Size: .125 +.0015 -.0015

CERTIFICATION REQUIREMENTS
Cert must state "MATERIAL COMPLIES WITH CONFLICT OF MINERALS ACT"
Dual Certs

Chemical

C	Mn	P	S	Si	Al
.19	.79	.013	.003	.07	.056

Mechanical

TEST	UNITS	HIGH	LOW	AVERAGE
Tensile Str	Lbs/Sqin	58000	58000	58000

Rod / Melt Source

Country of Origin
Canada

End of Certification

1910454962
ETA CTL#:49497800-04-02

I certify that the results are a true and correct copy of the records prepared and maintained by JOHNSTOWN WIRE TECHNOLOGIES in compliance with the requirements of the cited specification. Chemistry is as reported by the rod / bar supplier and is not in JWT A2LA accreditation. This test report cannot be reproduced or distributed except in full without the written permission of JOHNSTOWN WIRE TECHNOLOGIES. The test results certified herein relate only to the items tested.

Daniel J. Mallet, Director of Quality Assurance

PESCENT MFG
T.R. NO. 33143

Date Printed 07/24/2014

AVIALL - TRUE CERTIFIED COPY | 01/17/2018 | Ship #: 8005390363 | Line: 20 | 7364610894 | Qty: 100 | CPO: 1043997

MILL TEST CERTIFICATE

IVACO ROLLING MILLS LP

P.O.BOX 203, L'ORIGINAL, ONTARIO, CANADA K0B 1K0
TEL: (613) 675-4671 FAX: (613) 675-6859

10459 0114 **JOHNSTOWN WIRE TECHNOLOGIES**
124 LAUREL AVENUE
JOHNSTOWN, PA.
15905.

This report contains analysis data that were produced under laboratory Rio Tinto - Fer et Titane, ASLA certificate number 5129-01.

NVLAP only covers the chemistry presented within this certificate. All other data is not covered by the NVLAP accreditation.

Lab Code: 200143-0

ATTENTION : Ed Zapola FAX : (814) 532-5884

Date Rolled 23-Mar-2014 Date Chemical Analysis Performed 19-Jan-2014

P.O. Number	Order Number	Heat Number	Customer Spec.	Spec Rev. No.	Customer Part No.	Billet Order	Grade		Diameter
86314	10149004	W36139	AXA16CG	1/21/02	AXA16CG	361850	1018AK	CHQ	7.50 mm

Heat Analysis

	C	Mn	P	S	Si	Cu	Ni	Cr	Mo	Sn	Al	N	B	V
Spec. Min*	.17	.60									.020			
Actual	.19	.79	.013	.003	.07	.03	.04	.05	.006	.003	.056	.0039	.0001	.005
Spec. Max*	.20	.90	.020	.020	.10	.10	.10	.10	.040	.020	.060	.0080		

*This is to certify that heat number W36139 is in conformance with the required specifications.
Heat analysis obtained by test methods ASTM E419 and ASTM E1019.
*Minimum and maximum refer to the required customer specification.
This wire rod was produced in conformance with IMS AIR 4127
This steel was produced using a fine grain steelmaking practice (5-11).
This is to certify that the product is in conformance with RM-007 dated 11-8-2013 Radioactive emissions are at background levels. The wire rod was produced from Continuous Cast billets.
European Chemicals Agency's (ECHA) Candidate List of Substances of Very High Concern (SVHC) updated December 2012. Based on our review of the available documentation, the wire rod produced by RM does not contain any of the SVHC substances at concentrations exceeding the 0.1% weight by weight threshold specified by the ECHA. Laboratory testing of the wire rod steel for the presence of the SVHC substances was not undertaken.
Conflict Minerals: RM confirms that the material produced has no intentional addition of Columbite-Tantalite (Coltan, Niobium, Tantalum), Cassiterite (Tin), Gold and Wolframite (Tungsten) or their derivatives, and that we do not purchase directly or to the best of our knowledge indirectly materials originating from the Democratic Republic of Congo (the "DRC") or an adjoining country (Angola, Burundi, Central African Republic, Congo Republic, Rwanda, Sudan, Tanzania, Uganda and/or Zambia).
Random samples of steel produced by RM were analyzed by an independent testing laboratory and confirmed that there are trace amounts only of hexavalent chromium prohibited by RoHS.

Results of Physical Testing	UTS (ksi)	ROA (%)	DIA. (in)
Average	74.94	71.57	.2961
Maximum	75.18	71.66	.2969
Minimum	74.71	71.27	.2953

1910454962
ETA CTL#:49497800 - 04 - 02

APPROVED BY : _____
Supervisor, Quality Assurance

ISSUED BY QUALITY ASSURANCE : Elaine Demers
Date: 3 Apr 2014 Specification Clerk

This Certificate shall not be reproduced except in full, without the written approval of Ivaco Rolling Mills LP, a Heico Company. This certificate is not to be used by the client to claim related endorsement by NVLAP or an agency of the U.S. Government.

AVIALL - TRUE CERTIFIED COPY | 01/17/2018 | Ship #: 8005390363 | Line: 20 | 7364616894 | Qty: 100 | CPO: 1043997

20-5

PRODUCTION CADMIUM • NICKEL • CHROME

New Method Plating Co., Inc.

Established 1931

43 Hammond St.
Worcester, MA 01610
Phone 508.754.2871
Fax 508.754.1981
www.newmethodplating.com

CERTIFICATE OF COMPLIANCE

COMPANY CRESCENT MFG CO. DATE 3/4/15

PO# 40145 QUANTITY 30,000

JOB # 6-32 x 1.000 ph pan MS35206-234

CADMIUM PLATED IN ACCORDANCE WITH AMS QQ-P-416C
Class III Type II (Clear ___ Yellow X Black ___)

Hardness: NA HRC

[X] NO BAKE

[ ] Before plating, bake at 375+/-25F for 4 hours. After plating, bake at 375+/-25F for 8 hours.

[ ] Before plating, bake at 275+/-25F for 5 hours. After plating, bake at 275+/-25F for 23 hours.

[ ] Before plating, bake at 375+/-25F for 4 hours. After plating, bake at 375+/-25F for 23 hours.

Thickness Test Results

Accept [X] Reject [ ] Min.: Spec. .0002 Read .00026 Avg. .00031

Adhesion Test Results

Accept [X] Reject [ ] Inspected by: CM

Certification

This lot has been processed, sampled, tested, and inspected in accordance with the contract and specification requirements listed above, and the plating and conversion coating complies with those contract and specification requirements. Process control data is on file and is available upon request. We certify that these parts have been processed in a mercury free environment and that no materials used are from a "conflict country."

Signed: CM Christopher J. Capalbo Title: Quality Manager Date: MAR 04 2015

CRESCENT MFG
T.R. NO. 39143

1910454962
ETA CTL#:49497808-04-02

NMP R-1104 Rev. F

Date of Issue 01 September 09

AVIALL - TRUE CERTIFIED COPY | 01/17/2018 | Ship #: 8005390363 | Line: 20 | 7364610894 | Qty: 100 | CPO: 1043997

21

Original

ECAS, LLC
CERTIFICATE OF CONFORMITY

No: 542928

ORIGINAL

Bill To:

ATIS
ACCTS. PAYABLE
ZONE AVIATION GENERALE-AEROPORT
LE LAMENTIN, FRENCH WEST INDIES 972

Ship To:

ATIS
ATTN: RECIEVING
ZONE AVIATION GENERALE-AEROPORT
LE LAMENTIN, FRENCH WEST INDIES 972

Customer PO	Ship Date	Airway Bill Number
W/O#38348	11/5/2015	6282 2823 4825

Part No.	Description	Cond	Qty	S/L
AD32BS MFR: STANLEY LOT: 831123	POP RIVET ECCN#: 9A991 SCHB#: 7616.10.3000	NE	500	15
AD42BS MFR: STANLEY LOT: 872363	POP RIVET ECCN#: 9A991 SCHB#: 7616.10.3000	NE	1000	54
AD44BS MFR: POP LOT: 764566	POP RIVET ECCN#: 9A991 SCHB#: 7616.10.3000	NE	1000	16
MS20392-1C53 MFR: AFC LOT: 5857	CLEVIS PIN ECCN#: 9A991 SCHB#: 7319.90.0000	NE	10	7

P/N IPC: AD42BS

P/N fournisseur:

N° Doc. lib.: COC542928

S/N: 872363

Désignation: POP RIVET

Rayon:

Aéronef:

Péremption: _____

BON ETAT

BR 715 du 12/11/2015

ATIS OE FR.145.56 Ed2 R0 Nov0

CONDITIONS: NE - New NS - New Surplus OH-Overhauled RP-Repaired SV-Serviceable

We hereby certify that the items that are a part of this Purchase Order have been visually & dimensionally found to conform to all applicable standards, drawings & specifications. The liability of ECAS is limited to replacement of any item which is rejected because of a defect in material or workmanship if notified within 30 days & liability shall not exceed the invoice value. Such replacement shall constitute satisfaction of all liability.

Signed: _____

For and on behalf of EAST COAST AVIATION SUPPLIES, INC.

Insp. #2

Inspectors Stamp

Photocopie effectuée le 21/09/2018
au titre d'un délotissement de 4 pièce(s)
sur un total de 1000 pièces
par _____ de la société ATIS

STANLEY.
Engineered Fastening

Certificate of Compliance

To: Rapid Rivet
121 Toledo Street
Farmingdale NY 11735

Non-transferable

Customer's Order No. 341494
Sales Order No. 602187 SO
Shipping Date

PART NUMBER	CONTROL NUMBER	I/A/W	QUANTITY
[redacted]	[redacted]		250.000

We, Stanley Engineered Fastening certify that all items listed above and supplied on the above mentioned Purchase Order have been inspected and comply in every way with the relevant drawings and/or specifications in accordance with your requirements. Inspection records and material certifications are on file at Emhart Teknologies and may be reviewed at any time during normal working hours. Unless otherwise specified, raw material certifications are representative of the product listed.

Stanley Engineered Fastening maintains a single standard of quality and the Quality Assurance System has been certified to ISO/TS 16949:2009.

Authorized Signature 11/12/14 Firm Stanley Engineered Fastening
A Stanley Black & Decker, Inc. Company

CUSTOMER COPY

23

2655 Harrison Ave. SW
Canton, Ohio 44706-3047
Phone: 330-430-6190
Fax: 330-430-6199

CERTIFICATE OF CONFORMANCE

AVIALL AEROSPACE

I hereby certify that on 08/30/16 Airfasco Industries provided the supplies called for by Contract/ PO Number 45499273 in accordance with all applicable requirements for shipment. I further state/ that the process certifications are in conformance with the contract requirements, including specifications and/or drawings, physical item identification (part number) and the quantity shown on this or attached acceptance document. The part numbers certified below have been manufactured in the United States.

Quality Assurance Representative

WM. DENT

Photocopie effectuée le 25/02/2018
au titre d'un délotissement de 1 pièce(s)
sur un total de 100 pièces
par _____ de la société ATIS

PART NUMBER	LOT NUMBER	QUANTITY	PART NUMBER	LOT NUMBER	QUANTITY
AN4-35A	13454	1000			

Packing Slip

Original

Invoice #: 146402
Invoice Date: 8/30/2016
Time: 11:59:49 AM
Page: 1

AIRFASCO.com
2655 Harrison Ave SW
Canton, OH 44706
Ph: 330-430-6190, Fax: 330-430-6199,

To:
AVIALL AEROSPACE TEXAS
PO BOX 619048
DFW AIRPORT
DALLAS, TX 75261-0000
USA
ATTN: REJOE JACOB
Ph: 972-586-1903 Fax: 972-586-7995

Ship To:
AVIALL AEROSPACE TEXAS
2750 REGENT BLVD.
DFW AIRPORT
DALLAS, TX 75261-0000

Cust. PO#: 45499273 | Terms: NET 30 | Ship Via: FED EX MOTOR FRE | Ship Via Acc:
Order Date: 8/15/2016 | # of Items: 1 | # of Boxes: 14 | Weight: 245
Prepared By: | Sales Order: 120268 | Ship Log #: 1 | Ship Order:
Customer #: 15195 | VAT #: | Cust VAT #: | Ship Date: 8/30/2016
Buyer: REJOE JACOB | FOB: | AWB: | Shipment:
WO #:

Item	Part Number/Description	Shipped	BackOrd	CD	List Price	Disc	Unit Price	UOM	Total Amt
1	AN4-35A BOLT, AN Loc/Whse: 3C8 3F7 3F9 Control #: 125742-1 L-13454	1000	0	NE				EA	

C OF C ENCLOSED
14 BOXES 245 LBS
INV# 146401/146402/146403/146404/146405 ARE SHIPPING TOGETHER
PARTS MANUFACTURED IN USA
THANK YOU!

Special Instructions:

ITEM AN4-35A=28

BATCH 7364352134

NANUARIO
09/07/16

Authorized Signature:

24

1. Approving Civil Aviation Authority / Country: FAA/UNITED STATES	2. AUTHORIZED RELEASE CERTIFICATE FAA FORM 8130-3, AIRWORTHINESS APPROVAL TAG	3. Form Tracking Number: 4181113
4. Organization Name and Address: Cessna Aircraft Company (PC4) Cessna Parts Distribution Dept. 702 5800 E Pawnee, Wichita, KS 67218		5. Work Order/Contract/Invoice Number: 1359197

6. Item:	7. Description:	8. Part Number:	9. Quantity:	10. Serial Number:	11. Status/Work:
0	NUT	[illegible]	10	N/A	NEW

12. Remarks:

EXPORT MARTINIQUE

PO# 1018688

13a. Certifies the items identified above were manufactured in conformity to:
- [x] Approved design data and are in a condition for safe operation.
- [ ] Non-approved design data specified in Block 12.

14a. [ ] 14 CFR 43.9 Return to Service [ ] Other regulation specified in block 12

Certifies that unless otherwise specified in Block 12, the work identified in Block 11 and described in Block 12 was accomplished in accordance with Title 14, Code of Federal Regulations, part 43 and in respect to that work, the items are approved for return to service.

13b. Authorized Signature:	13c. Approval/Authorization No.:	14b. Authorized Signature:	14c. Approval/Certificate No.:
Marilyn K. Farber	ODA-100129-CE		
13d. Name (Typed or Printed):	**13e. Date (dd/mmm/yyyy):**	**14d. Name (Typed or Printed):**	**14e. Date (dd/mmm/yyyy):**
MARILYN K. FARBER	08/APR/2014		

User / Installer Responsibilities

It is important to understand that the existence of this document alone does not automatically constitute authority to install the aircraft engine/propeller/article. Where the user/installer performs work in accordance with the national regulations of an airworthiness authority different than the airworthiness authority of the country specified in Block 1, it is essential that the user/installer ensures that his/her airworthiness authority accepts aircraft engine(s)/propeller(s)/article(s) from the airworthiness authority of the country specified in Block 1.
Statements in Blocks 13a and 14a do not constitute installation certification. In all cases, aircraft maintenance records must contain an installation certification issued in accordance with the national regulations by the user/installer before the aircraft may be flown.

FAA Form 8130-3 (02/14) * Installer must cross-check eligibility with applicable technical data. NSN: 0052-00-012-9005

Photocopie effectuée le 25/05/2018
au titre d'un délotissement de 3 pièce(s)
sur un total de 10 pièces
par [signature] de la société ATIS

1. Approving Civil Aviation Authority/Country: FAA/United States	2. **AUTHORIZED RELEASE CERTIFICATE** FAA Form 8130-3, AIRWORTHINESS APPROVAL TAG	3. Form Tracking Number: 7364911048 1000000046314843

4. Organization Name and Address:	5. Work Order/Contract/Invoice Number:
AVIALL SERVICES INC. 2750 REGENT BLVD DFW AIRPORT, TX 75261	2268

6. Item:	7. Description:	8. Part Number:	9. Quantity:	10. Serial Number:	11. Status/Work:
1.	CABLES	62701-047	1	N/A	NEW

12. Remarks:

MQ
BRI
1705

THE PRODUCT(S)/ARTICLE(S) SHIPPED UNDER THIS APPROVAL WERE PRODUCED BY PIPER AIRCRAFT INC.

ATIS OE
FR.145.566
DDU

13a. Certifies the items identified above were manufactured in conformity to:

☒ Approved design data and are in a condition for safe operation.

☐ Non-approved design data specified in Block 12.

~~14a. ☐ 14 CFR 43.9 Return to Service ☐ Other regulation specified in Block 12 Certifies that unless otherwise specified in Block 12, the work identified in Block 11 and described in Block 12 was accomplished in accordance with Title 14, Code of Federal Regulations, part 43 and in respect to that work, the items are approved for return to service.~~

13b. Authorized Signature:	13c. Approval/Authorization No.:	~~14b. Authorized Signature:~~	~~14c. Approval/Certificate No.:~~
	278953503		
13d. Name (Typed or Printed):	**13e. Date (dd/mmm/yyyy):**	**~~14d. Name (Typed or Printed):~~**	**~~14e. Date (dd/mmm/yyyy):~~**
Harry Gammons	20 SEP 2018		

User/Installer Responsibilities

It is important to understand that the existence of this document alone does not automatically constitute authority to install the aircraft engine/propeller/article. Where the user/installer performs work in accordance with the national regulations of an airworthiness authority different than the airworthiness authority of the country specified in Block 1, it is essential that the user/installer ensures that his/her airworthiness authority accepts aircraft engine(s)propeller(s)/ article(s) from the airworthiness authority of the country specified in the Block 1. Statements in Blocks 13a and 14a do not constitute installation certification. In all cases, aircraft maintenance records must contain an installation certification issued in accordance with the national regulations by the user/installer before the aircraft may be flown.

26-2

1. Approving Civil Aviation Authority/Country: FAA/UNITED STATES	2. **AUTHORIZED RELEASE CERTIFICATE** **FAA Form 8130-3, AIRWORTHINESS APPROVAL TAG**	3. Form Tracking Number: ST0921966
4. Organization Name and Address: Piper Aircraft, Inc. 2926 Piper Drive Vero Beach, FL 32960 USA	**PC 206**	5. Work Order / Contract / Invoice Number: ST0921966 / 210008000 / SH0136696 Page 1 of 1

6. Item:	7. Description:	8. Part Number:	9. Quantity:	10. Serial Number:	11. Status/Work:
10	CABLE ASSY STAB TRIM AFT	62701-047	8	N/A	NEW

12. Remarks: Airworthiness Approval

13a. Certifies the items identified above were manufactured in conformity to:

[X] Approved design data and are in condition for safe operation.

[ ] Non-approved design data specified in Block 12.

14a. [ ] 14 CFR 43.9 Return to Service/ [ ] Other regulation specified in Block 12

Certifies that unless otherwise specified in Block 12, the work identified in Block and described in Block 12 was accomplished in accordance with Title 14, Code of/ Federal Regulations, part 43 and in respect to that work, the items are approved for return to service.

13b. Authorized Signature:	13c. Approval/Authorization No: PC206	14b. Authorized Signature:	14c. Approval/Certificate No.:
13d. Name (Typed or Printed): Wilson, James	13e. Date (dd/mmm/yyyy): 29/Jun/2018	14d. Name (Typed or Printed):	14e. Date (dd/mmm/yyyy):

User/Installer Responsibilities

It is important to understand that the existence of this document alone does not automatically constitute authority to install the aircraft engine/propeller/article.

Where the user/installer performs work in accordance with the national regulations of an airworthiness authority different than the airworthiness authority of the country specified in Block 1, it is essential that the user/installer ensures that his/her airworthiness authority accepts aircraft engine(s)/propeller(s)/article(s) from the airworthiness authority of the country specified in Block 1.

Statements in Blocks 13a and 14a do not constitute installation certification. In all cases, aircraft maintenance records must contain an installation certification issued in accordance with the national regulations by the user/installer before the aircraft may be flown.

FAA Form 8130-3 (02-14)

NSN: 0052-00-012-9005

AVIALL - TRUE CERTIFIED COPY - 09/20/2018 - BEDGINGTON - 7364911048

Piper

Packing Slip SH0136696 Original
Date 07-02-2018

Sales Order ST0921966
Page 49

210008000 AVIALL CENTRAL WAREHOUSE
2750 REGENT BLVD. DFW AIRPORT, Dallas, TX, 75261, USA

AVIALL CENTRAL WAREHOUSE
2750 REGENT BLVD. DFW AIRPORT
Dallas TX 75261
UNITED STATES OF AMERICA

Customer Order No.	Date	Ship Via	Ship Date	Point of Origin
0045832682	06-29-2018	Fedex Ground	06-29-2018	Vero Beach, FL 32960 USA

Aircraft S/N :

Line	Order	Item	Order Qty	Unit	Description	Qty Shipped	Backorder	Pl.Rec.Dt.
396	ST0921966	62701-047	8.00	ea	CABLE ASSY STAB TRIM AFT	8.00		07-02-2018
		HarmC 7312.10.2000	SchB 7312.10.2500	ECCN	9A991.d	Shelf Life 0	Country USA	

Shipment Reference : SH0136696 7/2/2018
SHIP FEDEX GRD BILL ACCT 0752-6857-2
FOR FEDEX GRD UNDER 150 LBS PER PACKAGE
AND TOTAL SHIPMENT 400 LBS OR LESS
ALL OTHER PLEASE REFER TO AVIALL
SHIPPING INSTRUCTIONS DATED 05/07/09

ITEM 62701-047=PI
BATCH 7364911048

EMARISCAL
07/11/18

Material heron has been made in conformance with all Federal wage and hour laws. The parts listed on this document, were produced and/or supplied under FAA Production Certificate 206.
Merchandise shipped according to order cannot be returned without our permission. All claims for damages should be made direct to transportation agency.
Piper Parts Limited Warranty: http://www.piper.com/warranty/

NOTE:
REMIT PAYMENT TO:
Piper Aircraft, Inc.
2926 Piper Drive
Vero Beach, FL 32960-1964

Form No. 012-341 Rev.07/2014

AVIALL - TRUE CERTIFIED COPY - 09/20/2018 - BEDGINGTON - 7364911048

1. Approving Civil Aviation Authority/Country: FAA/United States	2. **AUTHORIZED RELEASE CERTIFICATE** FAA Form 8130-3, AIRWORTHINESS APPROVAL TAG	3. Form Tracking Number: 7364620186 1000000043894064

4. Organization Name and Address:	5. Work Order/Contract/Invoice Number:
AVIALL SERVICES INC. 2750 REGENT BLVD DFW AIRPORT, TX 75261	1562

6. Item:	7. Description:	8. Part Number:	9. Quantity:	10. Serial Number:	11. Status/Work:
1.	BEARING	452-413	2	N/A	NEW

12. Remarks:

MQ
JUL
1937

THE PRODUCT(S)/ARTICLE(S) SHIPPED UNDER THIS APPROVAL WERE PRODUCED BY PIPER AIRCRAFT, INC..

ATIS OE
FR.145.566
DDU

13a. Certifies the items identified above were manufactured in conformity to:

☒ Approved design data and are in a condition for safe operation.

☐ Non-approved design data specified in Block 12.

14a. ☐ 14 CFR 43.9 Return to Service ☐ Other regulation specified in Block 12

Certifies that unless otherwise specified in Block 12, the work identified in Block 11 and described in Block 12 was accomplished in accordance with Title 14, Code of Federal Regulations, part 43 and in respect to that work, the items are approved for return to service.

13b. Authorized Signature:	13c. Approval/Authorization No.:	14b. Authorized Signature:	14c. Approval/Certificate No.:
Harry Gammons	278953503		
13d. Name (Typed or Printed):	**13e. Date (dd/mmm/yyyy):**	**14d. Name (Typed or Printed):**	**14e. Date (dd/mmm/yyyy):**
Harry Gammons	09 JUL 2018		

User/Installer Responsibilities

It is important to understand that the existence of this document alone does not automatically constitute authority to install the aircraft engine/propeller/article. Where the user/installer performs work in accordance with the national regulations of an airworthiness authority different than the airworthiness authority of the country specified in Block 1, it is essential that the user/installer ensures that his/her airworthiness authority accepts aircraft engine(s)propeller(s)/ article(s) from the airworthiness authority of the country specified in the Block 1. Statements in Blocks 13a and 14a do not constitute installation certification. In all cases, aircraft maintenance records must contain an installation certification issued in accordance with the national regulations by the user/installer before the aircraft may be flown.

27-2

AVIALL - TRUE CERTIFIED COPY - 07/09/2018 - JFACUNDO - 7364620186

1. Approving Civil Aviation Authority/Country:	2.	3. Form Tracking Number:
FAA/UNITED STATES	**AUTHORIZED RELEASE CERTIFICATE** **FAA Form 8130-3, AIRWORTHINESS APPROVAL TAG**	ST0905646
4. Organization Name and Address: Piper Aircraft, Inc. 2926 Piper Drive Vero Beach, FL 32960 USA	**PC 206**	5. Work Order / Contract / Invoice Number: ST0905646 / 210008000 / SH0108170 Page 1 of 1

6. Item:	7. Description:	8. Part Number:	9. Quantity:	10. Serial Number:	11. Status/Work:
10	BEARING	452-413	1,700	N/A	NEW

12. Remarks: Airworthiness Approval

13a. Certifies the items identified above were manufactured in conformity to:

[X] Approved design data and are in condition for safe operation.

[ ] Non-approved design data specified in Block 12.

14a. [ ] 14 CFR 43.9 Return to Service/ [ ] Other regulation specified in Block 12

Certifies that unless otherwise specified in Block 12, the work identified in Block 11 and described in Block 12 was accomplished in accordance with Title 14, Code of/ Federal Regulations, part 43 and in respect to that work, the items are approved for return to service.

13b. Authorized Signature:	13c. Approval/Authorization No:	14b. Authorized Signature:	14c. Approval/Certificate No.:
	PC206		
13d. Name (Typed or Printed): Wilson, James	13e. Date (dd/mmm/yyyy): 28/Jul/2017	14d. Name (Typed or Printed):	14e. Date (dd/mmm/yyyy):

User/Installer Responsibilities

It is important to understand that the existence of this document alone does not automatically constitute authority to install the aircraft engine/propeller/article.

Where the user/installer performs work in accordance with the national regulations of an airworthiness authority different than the airworthiness authority of the country specified in Block 1, it is essential that the user/installer ensures that his/her airworthiness authority accepts aircraft engine(s)/propeller(s)/article(s) from the airworthiness authority of the country specified in Block 1.

Statements in Blocks 13a and 14a do not constitute installation certification. In all cases, aircraft maintenance records must contain an installation certification issued in accordance with the national regulations by the user/installer before the aircraft may be flown.

27-3

Piper

Packing Slip SH0108170 Original
Date 07-28-2017

Sales Order ST0905646
Page 3

210008000 AVIALL CENTRAL WAREHOUSE
2750 REGENT BLVD. DFW AIRPORT, Dallas, TX, 75261, USA

AVIALL CENTRAL WAREHOUSE
2750 REGENT BLVD. DFW AIRPORT
Dallas TX 75261
UNITED STATES OF AMERICA

Customer Order No.	Date	Ship Via	Ship Date	Point of Origin
0045598952	08-24-2017	Fedex Ground	08-24-2017	Vero Beach, FL 32960 USA

Aircraft S/N :

Line	Order	Item	Order Qty	Unit	Description	Qty Shipped	Backorder	Pl.Rec.Dt.
108	ST0905646	452-413	1700.00	ea	BEARING	1700.00		07-07-2017

HarmC 8483.30.8090 SchB 8483.30.8090 ECCN 9A991.d Shelf Life 0 Country USA

Shipment Reference : SH0108170 7/28/2017
Back Order Quantity : 6.0000 em
SHIP FEDEX GRD BILL ACCT 0752-6857-2
FOR FEDEX GRD UNDER 150 LBS PER PACKAGE
AND TOTAL SHIPMENT 400 LBS OR LESS
ALL OTHER PLEASE REFER TO AVIALL
SHIPPING INSTRUCTIONS DATED 05/07/09

ITEM 452-413=PI

BATCH 7364620186

ATHOMPSON
08/08/17

Material heron has been made in conformance with all Federal wage and hour laws. The parts listed on this document, were produced and/or supplied under FAA Production Certificate 206. Merchandise shipped according to order cannot be returned without our permission. All claims for damages should be made direct to transportation agency.
Piper Parts Limited Warranty: http://www.piper.com/warranty/

Form No. 012-341 Rev.07/2014

NOTE:
REMIT PAYMENT TO:
Piper Aircraft, Inc.
2926 Piper Drive
Vero Beach, FL 32960-1964

AVIALL - TRUE CERTIFIED COPY - 07/09/2018 - JFACUNDO - 7364620186

1. Approving Civil Aviation Authority/Country: FAA/United States	2. **AUTHORIZED RELEASE CERTIFICATE** **FAA Form 8130-3, AIRWORTHINESS APPROVAL TAG**	3. Form Tracking Number: 7364760934 1000000043894063

4. Organization Name and Address:	5. Work Order/Contract/Invoice Number:
AVIALL SERVICES INC. 2750 REGENT BLVD DFW AIRPORT, TX 75261	1562

6. Item:	7. Description:	8. Part Number:	9. Quantity:	10. Serial Number:	11. Status/Work:
1.	RING SNAP	484-747	1	N/A	NEW

12. Remarks:

MQ
FAB
2114

THE PRODUCT(S)/ARTICLE(S) SHIPPED UNDER THIS APPROVAL WERE PRODUCED BY PIPER AIRCRAFT INC..

ATIS OE
FR.145.566
DDU

13a.Certifies the items identified above were manufactured in conformity to:		14a: ☐ 14 CFR 43.9 Return to Service ☐ Other regulation specified in Block 12 Certifies that unless otherwise specified in Block 12, the work identified in Block 11 and described in Block 12 was accomplished in accordance with Title 14, Code of Federal Regulations, part 43 and in respect to that work, the items are approved for return to service.	
☒ Approved design data and are in a condition for safe operation. ☐ Non-approved design data specified in Block 12.			
13b. Authorized Signature: Thomas C. Willis	13c. Approval/Authorization No.: 127604222	14b. Authorized Signature:	14c. Approval/Certificate No.:
13d. Name (Typed or Printed): Thomas Willis	13e. Date (dd/mmm/yyyy): 09 JUL 2018	14d. Name (Typed or Printed):	14e. Date (dd/mmm/yyyy):

User/Installer Responsibilities

It is important to understand that the existence of this document alone does not automatically constitute authority to install the aircraft engine/propeller/article. Where the user/installer performs work in accordance with the national regulations of an airworthiness authority different than the airworthiness authority of the country specified in Block 1, it is essential that the user/installer ensures that his/her airworthiness authority accepts aircraft engine(s)propeller(s)/ article(s) from the airworthiness authority of the country specified in the Block 1. Statements in Blocks 13a and 14a do not constitute installation certification. In all cases, aircraft maintenance records must contain an installation certification issued in accordance with the national regulations by the user/installer before the aircraft may be flown.

1. Approving Civil Aviation Authority/Country: FAA/UNITED STATES	2. **AUTHORIZED RELEASE CERTIFICATE** **FAA Form 8130-3, AIRWORTHINESS APPROVAL TAG**	3. Form Tracking Number: ST0919965
4. Organization Name and Address: Piper Aircraft, Inc. 2926 Piper Drive Vero Beach, FL 32960 USA	**PC 206**	5. Work Order / Contract / Invoice Number: ST0919965 / 210008000 / SH0122742 Page 1 of 1

6. Item:	7. Description:	8. Part Number:	9. Quantity:	10. Serial Number:	11. Status/Work:
10	RING SNAP	484-747	16	N/A	NEW
20	RING SNAP	484-747	53	N/A	NEW

12. Remarks: Airworthiness Approval

13a. Certifies the items identified above were manufactured in conformity to:

[X] Approved design data and are in condition for safe operation.

[ ] Non-approved design data specified in Block 12.

14a. [ ] 14 CFR 43.9 Return to Service/ [ ] Other regulation specified in Block 12

Certifies that unless otherwise specified in Block 12, the work identified in Block 11 and described in Block 12 was accomplished in accordance with Title 14, Code of/ Federal Regulations, part 43 and in respect to that work, the items are approved for return to service.

13b. Authorized Signature:	13c. Approval/Authorization No: PC206	14b. Authorized Signature:	14c. Approval/Certificate No.:
13d. Name (Typed or Printed): Wilson, James	13e. Date (dd/mmm/yyyy): 22/Jan/2018	14d. Name (Typed or Printed):	14e. Date (dd/mmm/yyyy):

User/Installer Responsibilities

It is important to understand that the existence of this document alone does not automatically constitute authority to install the aircraft engine/propeller/article.

Where the user/installer performs work in accordance with the national regulations of an airworthiness authority different than the airworthiness authority of the country specified in Block 1, it is essential that the user/installer ensures that his/her airworthiness authority accepts aircraft engine(s)/propeller(s)/article(s) from the airworthiness authority of the country specified in Block 1.

Statements in Blocks 13a and 14a do not constitute installation certification. In all cases, aircraft maintenance records must contain an installation certification issued in accordance with the national regulations by the user/installer before the aircraft may be flown.

AVIALL - TRUE CERTIFIED COPY - 07/09/2018 - FCANTU - 7364760934

Piper

Packing Slip SH0122742 Original
Date 01-22-2018

Sales Order ST0919965
Page 15

210008000 AVIALL CENTRAL WAREHOUSE
2750 REGENT BLVD. DFW AIRPORT, Dallas, TX, 75261, USA

AVIALL CENTRAL WAREHOUSE
2750 REGENT BLVD. DFW AIRPORT
Dallas TX 75261
UNITED STATES OF AMERICA

Customer Order No.	Date	Ship Via	Ship Date	Point of Origin
0045793258	01-25-2018	Fedex Standard Overnight	01-25-2018	Vero Beach, FL 32960 USA

Aircraft S/N :

Line	Order	Item	Order Qty	Unit	Description	Qty Shipped	Backorder	Pl.Rec.Dt.
72	ST0919965	484-747	53.00	ea	RING SNAP	53.00		01-24-2018

HarmC 7318.24.0000 SchB 7318.24.0000 ECCN 9A991.d Shelf Life 0 Country USA

Shipment Reference : SH0122742 1/22/2018
SHIP FEDEX GRD BILL ACCT 0752-6857-2
FOR FEDEX GRD UNDER 150 LBS PER PACKAGE
AND TOTAL SHIPMENT 400 LBS OR LESS
ALL OTHER PLEASE REFER TO AVIALL
SHIPPING INSTRUCTIONS DATED 05/07/09

ITEM 484-747=PI

BATCH 7364760934

EPATTERSON
01/24/18

Material heron has been made in conformance with all Federal wage and hour laws. The parts listed on this document, were produced and/or supplied under FAA Production Certificate 206.
Merchandise shipped according to order cannot be returned without our permission. All claims for damages should be made direct to transportation agency.
Piper Parts Limited Warranty: http://www.piper.com/warranty/

Form No. 012-341 Rev.07/2014

NOTE:
REMIT PAYMENT TO:
Piper Aircraft, Inc.
2926 Piper Drive
Vero Beach, FL 32960-1964

AVIALL - TRUE CERTIFIED COPY - 07/09/2018 - FCANTU - 7364760934

1. Approving Civil Aviation Authority/Country: FAA/United States	2. **AUTHORIZED RELEASE CERTIFICATE** **FAA Form 8130-3, AIRWORTHINESS APPROVAL TAG**	3. Form Tracking Number: 0114586607 1000000043894061

4. Organization Name and Address:	5. Work Order/Contract/Invoice Number:
AVIALL SERVICES INC. 2750 REGENT BLVD DFW AIRPORT, TX 75261	1562

6. Item:	7. Description:	8. Part Number:	9. Quantity:	10. Serial Number:	11. Status/Work:
1.	PIN COTTER (SPLIT)	MS24665-368	2	N/A	NEW

12. Remarks:

MQ
JES
1750

THE PRODUCT(S)/ARTICLE(S) SHIPPED UNDER THIS APPROVAL WERE PRODUCED BY ROLLS-ROYCE CORPORATION.

ATIS OE
FR.145.566
DDU

13a. Certifies the items identified above were manufactured in conformity to:	14a. ☐ 14 CFR 43.9 Return to Service ☐ Other regulation specified in Block 12
☒ Approved design data and are in a condition for safe operation. ☐ Non-approved design data specified in Block 12.	Certifies that unless otherwise specified in Block 12, the work identified in Block 11 and described in Block 12 was accomplished in accordance with Title 14, Code of Federal Regulations, part 43 and in respect to that work, the items are approved for return to service.

13b. Authorized Signature:	13c. Approval/Authorization No.:	14b. Authorized Signature:	14c. Approval/Certificate No.:
H.O. Gamm Jr.	278953503		
13d. Name (Typed or Printed):	**13e. Date (dd/mmm/yyyy):**	**14d. Name (Typed or Printed):**	**14e. Date (dd/mmm/yyyy):**
Harry Gammons	09 JUL 2018		

User/Installer Responsibilities

It is important to understand that the existence of this document alone does not automatically constitute authority to install the aircraft engine/propeller/article. Where the user/installer performs work in accordance with the national regulations of an airworthiness authority different than the airworthiness authority of the country specified in Block 1, it is essential that the user/installer ensures that his/her airworthiness authority accepts aircraft engine(s)propeller(s)/ article(s) from the airworthiness authority of the country specified in the Block 1. Statements in Blocks 13a and 14a do not constitute installation certification. In all cases, aircraft maintenance records must contain an installation certification issued in accordance with the national regulations by the user/installer before the aircraft may be flown.

29-2

1. Approving National Aviation Authority/Country	2.	3. Form Tracking Number
FAA/UNITED STATES	**AUTHORIZED RELEASE CERTIFICATE** **FAA Form 8130-3, AIRWORTHINESS APPROVAL TAG**	10183676-85884662-1000-001 Page 1 of 1

4. Organization Name and Address:		5. Work Order/Contract/Invoice
Rolls-Royce Corporation 2001 S.Tibbs Avenue INDIANAPOLIS IN 46241 USA	Certificate No. PC310 C/O Kuehne-Nagel 2840 Fortune Circle Dr. W Suite C INDIANAPOLIS IN 46241 USA	2138967 Case 6232607

6. Item	7. Description	8. Part Number	9. Eligibility*	10. Quantity	11. Serial/Batch Number	12. Status/Work
1	PIN, COTTER (SPLIT)	MS24665-368	N/A	253 EA	N/A	NEW

13. REMARKS: AIRWORTHINESS APPROVAL-PART(S). THIS FORM IS NOT AN EXPORT APPROVAL

DIRECT SHIP AUTHORIZATION

Company Sold To or Consigned To / Country:

AVIALL SERVICES INC
DFW AIRPORT
2750 REGENT BLVD.
DALLAS TX 75261-9048
USA

LAST PAGE

Limited life parts must be accompanied by maintenance history including total time/total cycles/time since new.

14. Certifies that the items identified above were manufactured in conformity to:

- [X] Approved design data and are in condition for safe operation
- [ ] Non-approved design data specified in Block 13

19. [ ] 14 CFR 43.9 Return to Service [ ] Other regulation specified in Block 13

Certifies that unless otherwise specified in Block 13, the work identified in Block 12 and described in Block 13 was accomplished in accordance with Title 14, Code of Federal Regulations, part 43, and in respect to that work, the items are approved for return to service.

15. Authorized Signature	16. Approval/Authorization Number	20. Authorized Signature	21. Approval/Certificate Number
Cynthia Swallow	ODA405265CE		
17. Name (Typed or Printed): Cynthia Swallow	**18. Date (m/d/y):** JAN/11/2014	**22. Name (Typed or Printed):**	**23. Date (m/d/y):**

USER/INSTALLER RESPONSIBILITIES

It is important to understand that the existence of this document alone does not automatically constitute authority to install the part/component/assembly.

Where the user/installer performs work in accordance with the national regulations of an airworthiness authority different than the airworthiness authority of the country specified in Block 1, it is essential that the user/installer ensures that his/her airworthiness authority accepts the parts/components/assemblies from the airworthiness authority of the country specified in Block 1.

Statements in Blocks 14 and 19 do not constitute installation certification. In all cases, aircraft maintenance records must contain an installation certification issued in accordance with the national regulations by the user/installer before the aircraft may be flown.

 * Installer must cross-check eligibility with applicable technical data.

AVIALL - TRUE 9/2018 - JBUSTILLOS - 01 4586607

29-3

ROLLS-ROYCE CERTIFICATE OF CONFORMITY

SOLD TO
AVIALL SERVICES INC
DFW AIRPORT
2750 REGENT BLVD.
DALLAS TX 75261-9048
CUSTOMER No. I54394

SHIPPED TO
AVIALL SERVICES INC
DFW AIRPORT
2750 REGENT BLVD.
DALLAS TX 75261-9048
CUSTOMER No. I54394

Rolls-Royce

Rolls-Royce Corporation
Fortune Circle Parts
INDIANAPOLIS IN 46241
Facsimile: Telephone:

Registered Office: 2001 S. Tibbs Avenue, Indianapolis, IN 46241

Certified to: ISO 9001:2000 and AS9100
Certificate No.: 05-0665(A)

No. of Cases
1

PRODUCT TYPE T56 Series III

SHIPMENT NO. 10183676 Country of Origi
USA

ROADWAY - ACCOUNT # 'BILL TO AVIALL'
AOG'S FEDEX ACCT # 075200927 UPS ACCT # 755755

CUSTOMERS ORDER NUMBER	ITEM NUMBER	PART NUMBER	DESCRIPTION	DELIVERY NUMBER	QTY/UNIT	COMMENTS
2138967	1	MS24665-368	PIN, COTTER (SPLIT)	85884662	253 EA	

SPHOMVILA
1/15/14

PO 2138967
LOT AV0114586607

FOR AND ON BEHALF OF:
ROLLS-ROYCE

CERTIFIED THAT UNLESS STATED ABOVE THE PARTS ON THIS DOCUMENT CONFORM FULLY TO CONTRACT REQUIREMENTS AND THE SPECIFICATIONS OF ROLLS-ROYCE

SIGNATURE William B. Kleiner DATE 11 Jan 2014
William B.Kleiner. V P Quality

AVIALL - TRUE CERTIFIED COPY - 07/09/2018 - JBUSTILLOS - 0114586607

(30) - 1

1. Approving Civil Aviation Authority/Country: FAA/United States	2. **AUTHORIZED RELEASE CERTIFICATE** FAA Form 8130-3, AIRWORTHINESS APPROVAL TAG	3. Form Tracking Number: 7364839311 1000000043894062

4. Organization Name and Address:	5. Work Order/Contract/Invoice Number:
AVIALL SERVICES INC. 2750 REGENT BLVD DFW AIRPORT, TX 75261	1562

6. Item:	7. Description:	8. Part Number:	9. Quantity:	10. Serial Number:	11. Status/Work:
1.	SHAFT	65246-000	1	N/A	NEW

12. Remarks:

MQ
FAB
2120

THE PRODUCT(S)/ARTICLE(S) SHIPPED UNDER THIS APPROVAL WERE PRODUCED BY PIPER AIRCRAFT INC.

ATIS OE
FR.145.566
DDU

13a. Certifies the items identified above were manufactured in conformity to:

- ☒ Approved design data and are in a condition for safe operation.
- ☐ Non-approved design data specified in Block 12.

~~14a. ☐ 14 CFR 43.9 Return to Service ☐ Other regulation specified in Block 12 Certifies that unless otherwise specified in Block 12, the work identified in Block 11 and described in Block 12 was accomplished in accordance with Title 14, Code of Federal Regulations, part 43 and in respect to that work, the items are approved for return to service.~~

13b. Authorized Signature:	13c. Approval/Authorization No.:	~~14b. Authorized Signature:~~	~~14c. Approval/Certificate No.:~~
Thomas C. Willis	127604222		
13d. Name (Typed or Printed):	**13e. Date (dd/mmm/yyyy):**	**~~14d. Name (Typed or Printed):~~**	**~~14e. Date (dd/mmm/yyyy):~~**
Thomas Willis	09 JUL 2018		

User/Installer Responsibilities

It is important to understand that the existence of this document alone does not automatically constitute authority to install the aircraft engine/propeller/article. Where the user/installer performs work in accordance with the national regulations of an airworthiness authority different than the airworthiness authority of the country specified in Block 1, it is essential that the user/installer ensures that his/her airworthiness authority accepts aircraft engine(s)propeller(s)/ article(s) from the airworthiness authority of the country specified in the Block 1. Statements in Blocks 13a and 14a do not constitute installation certification. In all cases, aircraft maintenance records must contain an installation certification issued in accordance with the national regulations by the user/installer before the aircraft may be flown.

30-2

1. Approving Civil Aviation Authority/Country: FAA/UNITED STATES	2. **AUTHORIZED RELEASE CERTIFICATE** FAA Form 8130-3, AIRWORTHINESS APPROVAL TAG	3. Form Tracking Number: ST0920835
4. Organization Name and Address: Piper Aircraft, Inc. 2926 Piper Drive Vero Beach, FL 32960 USA	**PC 206**	5. Work Order / Contract / Invoice Number: ST0920835 / 210008000 / SH0129196 Page 1 of 1

6. Item:	7. Description:	8. Part Number:	9. Quantity:	10. Serial Number:	11. Status/Work:
10	SHAFT	65246-000	10	N/A	NEW

12. Remarks: Airworthiness Approval

13a. Certifies the items identified above were manufactured in conformity to:

[X] Approved design data and are in condition for safe operation.

[ ] Non-approved design data specified in Block 12.

14a. [ ] 14 CFR 43.9 Return to Service/ [ ] Other regulation specified in Block 12

Certifies that unless otherwise specified in Block 12, the work identified in Block 11 and described in Block 12 was accomplished in accordance with Title 14, Code of/ Federal Regulations, part 43 and in respect to that work, the items are approved for return to service.

13b. Authorized Signature:	13c. Approval/Authorization No:	14b. Authorized Signature:	14c. Approval/Certificate No.
James Wilson	PC206		
13d. Name (Typed or Printed):	**13e. Date (dd/mmm/yyyy):**	**14d. Name (Typed or Printed):**	**14e. Date (dd/mmm/yyyy):**
Wilson, James	09/Apr/2018		

User/Installer Responsibilities

It is important to understand that the existence of this document alone does not automatically constitute authority to install the aircraft engine/propeller/article.

Where the user/installer performs work in accordance with the national regulations of an airworthiness authority different than the airworthiness authority of the country specified in Block 1, it is essential that the user/installer ensures that his/her airworthiness authority accepts aircraft engine(s)/propeller(s)/article(s) from the airworthiness authority of the country specified in Block 1.

Statements in Blocks 13a and 14a do not constitute installation certification. In all cases, aircraft maintenance records must contain an installation certification issued in accordance with the national regulations by the user/installer before the aircraft may be flown.

AVIALL - TRUE CERTIFIED COPY: 07/09/2018 - RCANTU - 7364839311

Packing Slip SH0129196 Original
Date 04-13-2018

Sales Order ST0920835
Page 65

210008000 AVIALL CENTRAL WAREHOUSE
2750 REGENT BLVD. DFW AIRPORT, Dallas, TX, 75261, USA

AVIALL CENTRAL WAREHOUSE
2750 REGENT BLVD. DFW AIRPORT
Dallas TX 75261
UNITED STATES OF AMERICA

Customer Order No.	Date	Ship Via	Ship Date	Point of Origin
0045817799	04-20-2018	Fedex Ground	04-20-2018	Vero Beach, FL 32960 USA

Aircraft S/N :

Line	Order	Item	Order Qty	Unit	Description	Qty Shipped	Backorder	Pl.Rec.Dt.
909	ST0920835	65246-000	10.00	ea	SHAFT	10.00		04-06-2018

HarmC 8483.10.5000 SchB 8483.10.5000 ECCN 9A991.d Shelf Life 0 Country USA

Shipment Reference : SH0129196 4/13/2018
SHIP FEDEX GRD BILL ACCT 0752-6857-2
FOR FEDEX GRD UNDER 150 LBS PER PACKAGE
AND TOTAL SHIPMENT 400 LBS OR LESS
ALL OTHER PLEASE REFER TO AVIALL
SHIPPING INSTRUCTIONS DATED 05/07/09

ITEM 65246-000=PI

BATCH 7364839311

MTHOMAS
04/23/18

Material heron has been made in conformance with all Federal wage and hour laws. The parts listed on this document, were produced and/or supplied under FAA Production Certificate 206. Merchandise shipped according to order cannot be returned without our permission. All claims for damages should be made direct to transportation agency.
Piper Parts Limited Warranty: http://www.piper.com/warranty/

NOTE:
REMIT PAYMENT TO:
Piper Aircraft, Inc.
2926 Piper Drive
Vero Beach, FL 32960-1964

Form No. 012-341 Rev.07/2014

AVIALL - TRUE CERTIFIED COPY - 07/09/2018 - FCANTU - 7364839311

(31)-1

1. Approving Civil Aviation Authority/Country: FAA/United States	2. **AUTHORIZED RELEASE CERTIFICATE** FAA Form 8130-3, AIRWORTHINESS APPROVAL TAG	3. Form Tracking Number: 7364802863 1000000043894067

4. Organization Name and Address:	5. Work Order/Contract/Invoice Number:
AVIALL SERVICES INC. 2750 REGENT BLVD DFW AIRPORT, TX 75261	1562

6. Item:	7. Description:	8. Part Number:	9. Quantity:	10. Serial Number:	11. Status/Work:
1.	WASHER	494-097	1	N/A	NEW

12. Remarks:

MQ
JUL
1935

ATIS OE
FR.145.566
DDU

THE PRODUCT(S)/ARTICLE(S) SHIPPED UNDER THIS APPROVAL WERE PRODUCED BY PIPER AIRCRAFT INC..

13a. Certifies the items identified above were manufactured in conformity to:

☒ Approved design data and are in a condition for safe operation.

☐ Non-approved design data specified in Block 12.

~~14a. ☐ 14 CFR 43.9 Return to Service ☐ Other regulation specified in Block 12 Certifies that unless otherwise specified in Block 12, the work identified in Block 11 and described in Block 12 was accomplished in accordance with Title 14, Code of Federal Regulations, part 43 and in respect to that work, the items are approved for return to service.~~

13b. Authorized Signature:	13c. Approval/Authorization No.:	~~14b. Authorized Signature:~~	~~14c. Approval/Certificate No.:~~
[signature]	278953503		
13d. Name (Typed or Printed):	**13e. Date (dd/mmm/yyyy):**	**~~14d. Name (Typed or Printed):~~**	**~~14e. Date (dd/mmm/yyyy):~~**
Harry Gammons	09 JUL 2018		

User/Installer Responsibilities

It is important to understand that the existence of this document alone does not automatically constitute authority to install the aircraft engine/propeller/article. Where the user/installer performs work in accordance with the national regulations of an airworthiness authority different than the airworthiness authority of the country specified in Block 1, it is essential that the user/installer ensures that his/her airworthiness authority accepts aircraft engine(s)propeller(s)/ article(s) from the airworthiness authority of the country specified in the Block 1. Statements in Blocks 13a and 14a do not constitute installation certification. In all cases, aircraft maintenance records must contain an installation certification issued in accordance with the national regulations by the user/installer before the aircraft may be flown.

31-2

1. Approving Civil Aviation Authority/Country: FAA/UNITED STATES	2. **AUTHORIZED RELEASE CERTIFICATE** **FAA Form 8130-3, AIRWORTHINESS APPROVAL TAG**	3. Form Tracking Number: ST0913084
4. Organization Name and Address: Piper Aircraft, Inc. 2926 Piper Drive Vero Beach, FL 32960 USA	**PC 206**	5. Work Order / Contract / Invoice Number: ST0913084 / 210008000 / SH0125562 Page 1 of 1

6. Item:	7. Description:	8. Part Number:	9. Quantity:	10. Serial Number:	11. Status/Work:
10	WASHER	494-097	20	N/A	NEW

12. Remarks: Airworthiness Approval

13a. Certifies the items identified above were manufactured in conformity to:

[X] Approved design data and are in condition for safe operation.

[ ] Non-approved design data specified in Block 12.

14a. [ ] 14 CFR 43.9 Return to Service [ ] Other regulation specified in Block 12

Certifies that unless otherwise specified in Block 12, the work identified in Block and described in Block 12 was accomplished in accordance with Title 14, Code of Federal Regulations, part 43 and in respect to that work, the items are approved for return to service.

13b. Authorized Signature: James Wilson	13c. Approval/Authorization No: PC206	14b. Authorized Signature:	14c. Approval/Certificate No.:
13d. Name (Typed or Printed): Wilson, James	13e. Date (dd/mmm/yyyy): 26/Feb/2018	14d. Name (Typed or Printed):	14e. Date (dd/mmm/yyyy):

User/Installer Responsibilities

It is important to understand that the existence of this document alone does not automatically constitute authority to install the aircraft engine/propeller/article.

Where the user/installer performs work in accordance with the national regulations of an airworthiness authority different than the airworthiness authority of the country specified in Block 1, it is essential that the user/installer ensures that his/her airworthiness authority accepts aircraft engine(s)/propeller(s)/article(s) from the airworthiness authority of the country specified in Block 1.

Statements in Blocks 13a and 14a do not constitute installation certification. In all cases, aircraft maintenance records must contain an installation certification issued in accordance with the national regulations by the user/installer before the aircraft may be flown.

AVIALL - TRUE CERTIFIED COPY: 07/09/2018 - JFACUNDO - 7364802863

Piper

Packing Slip SH0125562 Original
Date 03-06-2018

Sales Order ST0913084
Page 26

210008000 AVIALL CENTRAL WAREHOUSE
2750 REGENT BLVD. DFW AIRPORT, Dallas, TX, 75261, USA

AVIALL CENTRAL WAREHOUSE
2750 REGENT BLVD. DFW AIRPORT
Dallas TX 75261
UNITED STATES OF AMERICA

Customer Order No.	Date	Ship Via	Ship Date	Point of Origin
0045699023	03-02-2018	Fedex Ground	03-02-2018	Vero Beach, FL 32960 USA

Aircraft S/N :

Line	Order	Item	Order Qty	Unit	Description	Qty Shipped	Backorder	Pl.Rec.Dt.
1116	ST0913084	494-097	20.00	ea	WASHER	20.00		03-02-2018

HarmC 7318.22.0000 SchB 7318.22.0000 ECCN 9A991.d Shelf Life 0 Country USA

Shipment Reference : SH0125562 3/6/2018
SHIP FEDEX GRD BILL ACCT 0752-6857-2
FOR FEDEX GRD UNDER 150 LBS PER PACKAGE
AND TOTAL SHIPMENT 400 LBS OR LESS
ALL OTHER PLEASE REFER TO AVIALL
SHIPPING INSTRUCTIONS DATED 05/07/09

ITEM 494-097=PI
BATCH 7364802863

SPHOMVILAY
03/12/18

Material heron has been made in conformance with all Federal wage and hour laws. The parts listed on this document, were produced and/or supplied under FAA Production Certificate 206. Merchandise shipped according to order cannot be returned without our permission. All claims for damages should be made direct to transportation agency.
Piper Parts Limited Warranty: http://www.piper.com/warranty/

Form No. 012-341 Rev.07/2014

NOTE:
REMIT PAYMENT TO:
Piper Aircraft, Inc.
2926 Piper Drive
Vero Beach, FL 32960-1964

AVIALL - TRUE CERTIFIED COPY - 07/09/2018 - JFACUNDO - 7364802863

(32)-1

1. Approving Civil Aviation Authority/Country: FAA/United States	2. **AUTHORIZED RELEASE CERTIFICATE** FAA Form 8130-3, AIRWORTHINESS APPROVAL TAG	3. Form Tracking Number: 7364906256 1000000043894065

4. Organization Name and Address:	5. Work Order/Contract/Invoice Number:
AVIALL SERVICES INC. 2750 REGENT BLVD DFW AIRPORT, TX 75261	1562

6. Item:	7. Description:	8. Part Number:	9. Quantity:	10. Serial Number:	11. Status/Work:
1.	BRG THRUST WASHER	452-418	1	N/A	NEW

12. Remarks:

MQ
FAB
2334

THE PRODUCT(S)/ARTICLE(S) SHIPPED UNDER THIS APPROVAL WERE PRODUCED BY PIPER AIRCRAFT INC.

ATIS OE
FR.145.566
DDU

13a.Certifies the items identified above were manufactured in conformity to:		14a: ☐ 14 CFR 43.9 Return to Service ☐ Other regulation specified in Block 12 Certifies that unless otherwise specified in Block 12, the work identified in Block 11 and described in Block 12 was accomplished in accordance with Title 14, Code of Federal Regulations, part 43 and in respect to that work, the items are approved for return to service.	
☒ Approved design data and are in a condition for safe operation. ☐ Non-approved design data specified in Block 12.			
13b. Authorized Signature: Thomas C. Willis	13c. Approval/Authorization No.: 127604222	14b. Authorized Signature:	14c. Approval/Certificate No.:
13d. Name (Typed or Printed): Thomas Willis	13e. Date (dd/mmm/yyyy): 09 JUL 2018	14d. Name (Typed or Printed):	14e. Date (dd/mmm/yyyy):

User/Installer Responsibilities

It is important to understand that the existence of this document alone does not automatically constitute authority to install the aircraft engine/propeller/article. Where the user/installer performs work in accordance with the national regulations of an airworthiness authority different than the airworthiness authority of the country specified in Block 1, it is essential that the user/installer ensures that his/her airworthiness authority accepts aircraft engine(s)propeller(s)/ article(s) from the airworthiness authority of the country specified in the Block 1. Statements in Blocks 13a and 14a do not constitute installation certification. In all cases, aircraft maintenance records must contain an installation certification issued in accordance with the national regulations by the user/installer before the aircraft may be flown.

32-2

AVIALL - TRUE CERTIFIED COPY - 07/09/2018 - FCANTU - 7364906256

1. Approving Civil Aviation Authority/Country:	2.	3. Form Tracking Number:
FAA/UNITED STATES	**AUTHORIZED RELEASE CERTIFICATE** **FAA Form 8130-3, AIRWORTHINESS APPROVAL TAG**	ST0923473
4. Organization Name and Address: Piper Aircraft, Inc. 2926 Piper Drive Vero Beach, FL 32960 USA	**PC 206**	5. Work Order / Contract / Invoice Number: ST0923473 / 210008000 / SH0134764 Page 1 of 1

6. Item:	7. Description:	8. Part Number:	9. Quantity:	10. Serial Number:	11. Status/Work:
10	BEARING THUST WASHER	452-418	20	N/A	NEW

12. Remarks: Airworthiness Approval

13a. Certifies the items identified above were manufactured in conformity to:

[X] Approved design data and are in condition for safe operation.

[ ] Non-approved design data specified in Block 12.

14a. [ ] 14 CFR 43.9 Return to Service/ [ ] Other regulation specified in Block 12

Certifies that unless otherwise specified in Block 12, the work identified in Block 11 and described in Block 12 was accomplished in accordance with Title 14, Code of/ Federal Regulations, part 43 and in respect to that work, the items are approved for return to service.

13b. Authorized Signature:	13c. Approval/Authorization No:	14b. Authorized Signature:	14c. Approval/Certificate No.:
James Wilson	PC206		
13d. Name (Typed or Printed):	**13e. Date (dd/mmm/yyyy):**	**14d. Name (Typed or Printed):**	**14e. Date (dd/mmm/yyyy):**
Wilson, James	11/Jun/2018		

User/Installer Responsibilities

It is important to understand that the existence of this document alone does not automatically constitute authority to install the aircraft engine/propeller/article.

Where the user/installer performs work in accordance with the national regulations of an airworthiness authority different than the airworthiness authority of the country specified in Block 1, it is essential that the user/installer ensures that his/her airworthiness authority accepts aircraft engine(s)/propeller(s)/article(s) from the airworthiness authority of the country specified in Block 1.

Statements in Blocks 13a and 14a do not constitute installation certification. In all cases, aircraft maintenance records must contain an installation certification issued in accordance with the national regulations by the user/installer before the aircraft may be flown.

Piper

Packing Slip SH0134764 Original
Date 06-13-2018

Sales Order ST0923473
Page 103

210008000 AVIALL CENTRAL WAREHOUSE
2750 REGENT BLVD. DFW AIRPORT, Dallas, TX, 75261, USA

AVIALL CENTRAL WAREHOUSE
2750 REGENT BLVD. DFW AIRPORT
Dallas TX 75261
UNITED STATES OF AMERICA

Customer Order No.	Date	Ship Via	Ship Date	Point of Origin
0045853962	06-22-2018	Fedex Ground	06-22-2018	Vero Beach, FL 32960 USA

Aircraft S/N :

Line	Order	Item	Order Qty	Unit	Description	Qty Shipped	Backorder	Pl.Rec.Dt.
1332	ST0923473	452-418	20.00	ea	BEARING THUST WASHER	20.00		06-01-2018

HarmC 8482.10.5008 SchB 8482.10.5008 ECCN 9A991.d Shelf Life 0 Country USA

Shipment Reference : SH0134764 6/13/2018
SHIP FEDEX GRD BILL ACCT 0752-6857-2
FOR FEDEX GRD UNDER 150 LBS PER PACKAGE
AND TOTAL SHIPMENT 400 LBS OR LESS
ALL OTHER PLEASE REFER TO AVIALL
SHIPPING INSTRUCTIONS DATED 05/07/09

ITEM 452-418=PI
BATCH 7364906256

XALONSO
07/06/18

Material heron has been made in conformance with all Federal wage and hour laws. The parts listed on this document, were produced and/or supplied under FAA Production Certificate 206.
Merchandise shipped according to order cannot be returned without our permission. All claims for damages should be made direct to transportation agency.
Piper Parts Limited Warranty: http://www.piper.com/warranty/

NOTE:
REMIT PAYMENT TO:
Piper Aircraft, Inc.
2926 Piper Drive
Vero Beach, FL 32960-1964

Form No. 012-341 Rev.07/2014

AVIALL - TRUE CERTIFIED COPY - 07/09/2018 - FCANTU - 7364906256

(33)-1

1. Approving Civil Aviation Authority/Country: FAA/United States	2. **AUTHORIZED RELEASE CERTIFICATE** FAA Form 8130-3, AIRWORTHINESS APPROVAL TAG	3. Form Tracking Number: 7364702467 1000000043894066

4. Organization Name and Address:	5. Work Order/Contract/Invoice Number:
AVIALL SERVICES INC. 2750 REGENT BLVD DFW AIRPORT, TX 75261	1562

6. Item:	7. Description:	8. Part Number:	9. Quantity:	10. Serial Number:	11. Status/Work:
1.	BARREL	63530-000	1	N/A	NEW

12. Remarks:

MQ
FAB
2337

THE PRODUCT(S)/ARTICLE(S) SHIPPED UNDER THIS APPROVAL WERE PRODUCED BY PIPER AIRCRAFT INC..

ATIS OE
FR.145.566
DDU

13a. Certifies the items identified above were manufactured in conformity to:

- ☒ Approved design data and are in a condition for safe operation.
- ☐ Non-approved design data specified in Block 12.

~~14a. ☐ 14 CFR 43.9 Return to Service ☐ Other regulation specified in Block 12 Certifies that unless otherwise specified in Block 12, the work identified in Block 11 and described in Block 12 was accomplished in accordance with Title 14, Code of Federal Regulations, part 43 and in respect to that work, the items are approved for return to service.~~

13b. Authorized Signature:	13c. Approval/Authorization No.:	~~14b. Authorized Signature:~~	~~14c. Approval/Certificate No.:~~
Thomas C. Willis	127604222		
13d. Name (Typed or Printed):	**13e. Date (dd/mmm/yyyy):**	**~~14d. Name (Typed or Printed):~~**	**~~14e. Date (dd/mmm/yyyy):~~**
Thomas Willis	09 JUL 2018		

User/Installer Responsibilities

It is important to understand that the existence of this document alone does not automatically constitute authority to install the aircraft engine/propeller/article. Where the user/installer performs work in accordance with the national regulations of an airworthiness authority different than the airworthiness authority of the country specified in Block 1, it is essential that the user/installer ensures that his/her airworthiness authority accepts aircraft engine(s)propeller(s)/ article(s) from the airworthiness authority of the country specified in the Block 1. Statements in Blocks 13a and 14a do not constitute installation certification. In all cases, aircraft maintenance records must contain an installation certification issued in accordance with the national regulations by the user/installer before the aircraft may be flown.

33-2

AVIALL - TRUE CERTIFIED COPY - 07/09/2018 - FCANTU - 736470247

1. Approving Civil Aviation Authority/Country:	2.	3. Form Tracking Number:
FAA/UNITED STATES	**AUTHORIZED RELEASE CERTIFICATE** **FAA Form 8130-3, AIRWORTHINESS APPROVAL TAG**	ST0913169
4. Organization Name and Address: Piper Aircraft, Inc. 2926 Piper Drive Vero Beach, FL 32960 USA	**PC 206**	5. Work Order / Contract / Invoice Number: ST0913169 / 210008000 / SH0115978 Page 1 of 1

6. Item:	7. Description:	8. Part Number:	9. Quantity:	10. Serial Number:	11. Status/Work:
10	BARREL	63530-000	15	N/A	NEW

12. Remarks: Airworthiness Approval

13a. Certifies the items identified above were manufactured in conformity to:

[X] Approved design data and are in condition for safe operation.

[ ] Non-approved design data specified in Block 12.

14a. [ ] 14 CFR 43.9 Return to Service/ [ ] Other regulation specified in Block 12

Certifies that unless otherwise specified in Block 12, the work identified in Block 11 and described in Block 12 was accomplished in accordance with Title 14, Code of/ Federal Regulations, part 43 and in respect to that work, the items are approved for return to service.

13b. Authorized Signature:	13c. Approval/Authorization No:	14b. Authorized Signature:	14c. Approval/Certificate No.:
James Wilson	PC206		
13d. Name (Typed or Printed): Wilson, James	13e. Date (dd/mmm/yyyy): 03/Nov/2017	14d. Name (Typed or Printed):	14e. Date (dd/mmm/yyyy):

User/Installer Responsibilities

It is important to understand that the existence of this document alone does not automatically constitute authority to install the aircraft engine/propeller/article.

Where the user/installer performs work in accordance with the national regulations of an airworthiness authority different than the airworthiness authority of the country specified in Block 1, it is essential that the user/installer ensures that his/her airworthiness authority accepts aircraft engine(s)/propeller(s)/article(s) from the airworthiness authority of the country specified in Block 1.

Statements in Blocks 13a and 14a do not constitute installation certification. In all cases, aircraft maintenance records must contain an installation certification issued in accordance with the national regulations by the user/installer before the aircraft may be flown.

33-3

Piper

Packing Slip SH0115978 Original
Date 11-07-2017
1OF2 (46X16X19) 2OF2 (46X16X19) LH

Sales Order ST0913169
Page 94

210008000 AVIALL CENTRAL WAREHOUSE
2750 REGENT BLVD. DFW AIRPORT, Dallas, TX, 75261, USA

AVIALL CENTRAL WAREHOUSE
2750 REGENT BLVD. DFW AIRPORT
Dallas TX 75261
UNITED STATES OF AMERICA

Customer Order No.	Date	Ship Via	Ship Date	Point of Origin
0045700395	11-17-2017	Fedex Ground	11-17-2017	Vero Beach, FL 32960 USA

Aircraft S/N :

Line	Order	Item	Order Qty	Unit	Description	Qty Shipped	Backorder	Pl.Rec.Dt.
864	ST0913169	63530-000	15.00	ea	BARREL	15.00		11-03-2017

HarmC 8803.20.0030 SchB 8803.20.0010 ECCN 9A991.d Shelf Life 0 Country USA

Shipment Reference : SH0115978 11/7/2017
SHIP FEDEX GRD BILL ACCT 0752-6857-2
FOR FEDEX GRD UNDER 150 LBS PER PACKAGE
AND TOTAL SHIPMENT 400 LBS OR LESS
ALL OTHER PLEASE REFER TO AVIALL
SHIPPING INSTRUCTIONS DATED 05/07/09

ITEM 63530-000=PI

BATCH 7364702467

JLWILSON
11/10/17

Material herein has been made in conformance with all Federal wage and hour laws. The parts listed on this document, were produced and/or supplied under FAA Production Certificate 206. Merchandise shipped according to order cannot be returned without our permission. All claims for damages should be made direct to transportation agency.
Piper Parts Limited Warranty: http://www.piper.com/warranty/

Form No. 012-341 Rev.07/2014

NOTE:
REMIT PAYMENT TO:
Piper Aircraft, Inc.
2926 Piper Drive
Vero Beach, FL 32960-1964

AVIALL - TRUE CERTIFIED COPY - 07/09/2018 - FCANTU - 7364702467

1. Approving National Aviation Authority/Country: FAA/UNITED STATES	2. AUTHORIZED RELEASE CERTIFICATE FAA Form 8130-3, AIRWORTHINESS APPROVAL TAG	3. Form Tracking Number: AV0312509786 11590336

34

4. Organization Name and Address:	Aviall Services Inc. 2750 Regent Blvd Dallas, TX 75261	5. Work Order/Contract/Invoice Number: CPO1012182

6. Item:	7. Description:	8. Part Number	9. Eligibility:*	10. Quantity:	11. Serial/Batch Number:	12. Status/Work:
1	WASHER	690-623	N/A	20	N/A	NEW

13. Remarks:

CA
LOR
0841

Photocopie effectuée le 26/02/2017
au titre d'un délotissement de 1 pièce(s)
sur un total de 20 pièces
par _____ de la société ATIS

ATIS OE FR.145.566 RFC

Export Airworthiness approval
No special import requirements for COLOMBIA stated at time of issuance.
The products/article(s) shipped under this approval were produced by PIPER AIRCRAFT INC. PC 206

14. Certifies the items identified above were manufactured in conformity to:
[X] Approved design data and are in a condition for safe operation.
[ ] Non-approved design data specified in Block 13.

19. [ ] 14 CFR 43.9 Return to Service [ ] Other regulation specified in Block 13
Certifies that unless otherwise specified in Block 13, the work identified in Block 12 and described in Block 13 was accomplished in accordance with Title 14, Code of Federal Regulations, part 43 and in respect to that work, the items are approved for return to service.

15. Authorized Signature:	16. Approval/Authorization No.: DART-700704-SW	20. Authorized Signature:	21. Approval/Certificate No.:
17. Name (Typed or Printed): DAVID L. BURKE	18. Date (m/d/y): May 06, 2013	22. Name (Typed or Printed):	23. Date (m/d/y):

User/Installer Responsibilities

It is important to understand that the existence of this document alone does not automatically constitute authority to install the part/component/assembly.
Where the user/installer performs work in accordance with the national regulations of an airworthiness authority different than the airworthiness authority of the country specified in Block 1, it is essential that the user/installer ensures that his/her airworthiness authority accepts parts/components/assemblies from the airworthiness authority of the country specified in Block 1.
Statements in Blocks 14 and 19 do not constitute installation certification. In all cases, aircraft maintenance records must contain an installation certification issued in accordance with the national regulations by the user/installer before the aircraft may be flown.

(35)

ATIS OE FR.145.566 DDU

Original

East Coast Aviation Supplies, Inc.
CERTIFICATE OF CONFORMITY

No: 518828

ORIGINAL

Bill To:

ATIS
ACCTS. PAYABLE
ZONE AVIATION GENERALE-AEROPORT
LE LAMENTIN, FRENCH 97232

Ship To:

ATIS
ATTN: RECEIVING
ZONE AVIATION GENERALE-AEROPORT
LE LAMENTIN, FRENCH 97232

Customer PO	Ship Date	Airway Bill Number
472	3/24/2015	6244 7804 7857

Part No.	Description	Cond	Qty	S/L
AN3-4A MFR: AFC LOT: 23905	BOLT UNDRILLED ECCN#: 9A991 SCHB#: 7318.15.2000	NE	100	41
AN525-10R10 MFR: LFC LOT: 53999	SCREW ECCN#: 9A991 SCHB#: 7318.15.2000	NE	500	33
AN525-10R8 MFR: LFC LOT: 53577	SCREW ECCN#: 9A991 SCHB#: 7318.15.2000	NE	200	41
AN525-10R9 MFR: LFC LOT: 51165	SCREW ECCN#: 9A991 SCHB#: 7318.15.2000	NE	500	30
AN525-832R8 MFR: CRESCENT LOT: 76569	SCREW ECCN#: 9A991 SCHB#: 7318.15.2000	NE	500	36
AN525-832R9 MFR: _MAC LOT: 63431	SCREW ECCN#: 9A991 SCHB#: 7318.15.2000	NE	500	24
CR3212-4-02 MFR: CHERRY LOT: 87337655	CHERRY RIVET ECCN#: 9A991.d SCHB#: 8803.30.0010	NE	100	179

P/N IPC: AN3-4A

P/N fournisseur:

N° Doc. lib.: COC 518828

S/N: lot 23905

Désignation: Bolt

Rayon: ROA

Aéronef:

Péremption: _____

BON ETAT

BR 666 du 30/03/2015

ATIS OE FR.145.56 Ed2 R0 Nov0

CONDITIONS: NE - New NS - New Surplus OH-Overhauled RP-Repaired SV-Serviceable

We hereby certify that the items that are a part of this Purchase Order have been visually & dimensionally found to conform to all applicable standards, drawings & specifications. The liability of ECAS is limited to replacement of any item which is rejected because of a defect in material or workmanship if notified within 30 days & liability shall not exceed the invoice value. Such replacement shall constitute satisfaction of all liability.

Signed: _____

For and on behalf of EAST COAST AVIATION SUPPLIES, INC.

Inspectors Stamp **Insp. #2**

Photocopie effectuée le 27/09/2018
au titre d'un délotissement de 1 pièce(s)
sur un total de 10 pièces
par SUN de la société ATIS

36

MONROE AEROSPACE

CERTIFICATE OF CONFORMITY

NO: 585056

BILL TO:	SHIP TO:
ATIS ACCTS. PAYABLE ZONE AVIATION GENERALE-AEROPORT LE LAMENTIN, MARTINOQUE 97232	ATIS ATTN: RECIEVING ZONE AVIATION GENERALE-AEROPORT LE LAMENTIN, MARTINOQUE 97232

CUSTOMER PO	SHIP DATE	AIRWAY BILL/TRACKING #
CF598		665765272406

PART NO:	Description	CND	QTY	S/L		
AN919-3D	REDUCER	NE	8	30	LOT: 8142	MFR: INLAND MACHINE
AN960-8	Customer Reference: WASHER	NE	200	45	LOT: Y4658	MFR: ANILLO
NAS1149F0363P	Customer Reference: WASHER	NE	200	1	LOT: SA4633	MFR: ANILLO
AN960-516	Customer Reference: WASHER	NE	200	57	LOT: SA6173	MFR: ANILLO
MS24694S95	Customer Reference: STRUCTURAL SCREW	NE	100	17	LOT: 52603	MFR: LFC
44PN REV: N/A	Customer Reference: CLEAR TUBING	NE	150	30	LOT: 11203312	MFR: FLOWLINE
261N04	Customer Reference: NYLON NUT/SLEEVE	NE	10	46	LOT: 10964379	MFR: GHX
262N04	Customer Reference: NYLON UNION	NE	5	30	LOT: 10964379	MFR: GHX
265N04	Customer Reference: NYLON UNION/ELBOW	NE	4	21	LOT: 10964379	MFR: GHX
CR3213-4-02	Customer Reference: CHERRY RIVET	NE	200	342	LOT: 88052451	MFR: CHERRY
CR3213-4-03	Customer Reference: CHERRY RIVET	NE	200	209	LOT: 86089214	MFR: CHERRY
	Customer Reference:					

CONDITIONS: NE - New OH-OVERHAULED RP-REPAIRED SV-SERVICEABLE

We hereby certify that the items that are a part of this Purchase Order have been visually & dimensionally found to conform to all applicable standards, drawings & specifications. The liability of ECAS, LLC is limited to replacement of any item which is rejected because of a defect in material or workmanship if notified within 30 days & liability shall not exceed the invoice value. Such replacement shall constitute satisfaction of all liability.

SIGNED:

For and on behalf of ECAS, LLC dba MONROE AEROSPACE

ECAS, LLC dba MONROE AEROSPACE
399 EAST DRIVE MELBOURNE, FL 32904 PH: 800.330.3975

Photocopie effectuée le 27/02/2018
au titre d'un délotissement de 1 pièce(s)
sur un total de 200 pièces
par _____ de la société ATIS

ANILLO *Industries, Inc.*
2090 NORTH GLASSELL STREET, ORANGE, CA 92865-3391 USA
PLEASE REMIT TO
P.O. BOX 5586 ORANGE, CA 92863-5586 USA
(714)637-7000 (562)924-6632 FAX(714) 637-3022 CAGE CODE: 10630

AS9100 NADCAP CP ISO 9001 CERTIFIED

579925

Packing List & Certification

WE ACCEPT
VISA/MASTER/DISCOVER/AMEX

SOLD TO 3174
EAST COAST AVIATION SUPPLIES
ATTN: ACCOUNTS PAYABLE DEPT.
399 EAST DRIVE

MELBOURNE, FL 32904

SHIP TO D
ECAS WEST
7540 DEAN MARTIN DRIVE
506/507
LAS VEGAS,NV 89139

DATE ORDER REC'D	ORDER NUMBER	INVOICE DATE	SHIPPED VIA	TERMS
12/09/2014	10048-NV		UPS GRND 3165E0	1% 10 DAYS, NET 30

ITEM	ORDERED	SHIPPED	DESCRIPTION	NET WEIGHT
1	250,000	250,000	**AN960-6** REV 21 /LOT#Y3246 /QCR:1,4,6,8,15,30, NAS1149FN632P ECCN: 9A991 Schedule B#: 7318.22.0000 COO: USNLR	
2	250,000	171,705	**AN960-6L** REV 21 /LOT#Y2869 /QCR:1,4,6,8,15,30, NAS1149FN616P ECCN: 9A991 Schedule B#: 7318.22.0000 COO: USNLR	
4	100,000	100,000	**AN960-8L** REV 21 /LOT#Y3407 /QCR:1,4,6,8,15,30, NAS1149FN816P ECCN: 9A991 Schedule B#: 7318.22.0000 COO: USNLR	
5	500,000	500,000	**AN960-10** REV 21/SA4633/Y3242 /QCR:1,4,6,8,15,30, NAS1149D0363P ECCN: 9A991 Schedule B#: 7318.22.0000 COO: USNLR	
7	250,000	250,000	**AN960-416** REV 21 /LOT#SA4335 /QCR:1,4,6,8,15,30, NAS1149F0463P ECCN: 9A991 Schedule B#: 7318.22.0000 COO: USNLR	
8	100,000	100,000	**AN960-516** REV 21 /LOT#Y4656 /QCR:1,4,6,8,15,30, NAS1149F0563P ECCN: 9A991 Schedule B#: 7318.22.0000 COO: USNLR	

We certify that: 1. Item number 1,2,4,5,7,8 above is manufactured in accordance with the material and processing specifications of this order.
2. We certify that the material on this order conforms in all respects to the current applicable government and/or manufacturer's specification. Test reports are on file and are available for examination on all Anillo manufactured parts. All claims for errors or shortages must be made within 10 days after receipt of goods. No good to be returned without written authorization. All claims for defective material must filed within 30 days of shipment to receive consideration. We do not assume financial responsibility or liability from the use of products sold, other than the replacement value of the products sold, if claimed within the specified time limit above.

<< R.M.A.# REQUIRED FOR RETURNS >> << TO THE BEST OF OUR KNOWLEDGE, PARTS ARE MERCURY FREE >>

Certification

STAMP 22 DATE 12-11-14

DFAR DOES NOT APPLY
ANILLO IND. (CageCode: 10630)
Part #: AN960-10
Quantity: 355639
P.O.#: 10048-NV
LOT#: SA4633
ITEM#: 5 REV. 21
Packed By: NB

ANILLO IND. (CageCode: 10630)
Part #: AN960-10
Quantity: 144361
P.O.#: 10048-NV
LOT#: Y3242
ITEM#: 5 REV. 21
Packed By: NB

BY Ben Omidwar
Ben Omidwar, Quality Assurance Manager

FI 4.03.05

35

ITEM: 8 3536653 PN: MS21042-3 8 QTY: 100
ORDER: 3536653 SN/LOT: N/A DESC: NUT U/M: EA

1. Approving National Aviation Authority / Country: FAA/UNITED STATES	2. AUTHORIZED RELEASE CERTIFICATE FAA FORM 8130-3, AIRWORTHINESS APPROVAL TAG	3. Form Tracking Number: 3536653
4. Organization Name and Address: Cessna Aircraft Company (PC4) Cessna Parts Distribution Dept. 702 5800 E Pawnee, Wichita, KS 67218		5. Work Order/Contract/Invoice Number: 1205392

6. Item	7. Description	8. Part Number	9. Eligibility*	10. Quantity	11. Serial/Batch Number	12. Status/Work
8	NUT	MS21042-3	N/A	100	N/A	New

13. Remarks:

EXPORT MARTINIQUE

ATIS OE
FR.145.566
DFC

PO# 1006752

14. Certifies the items identified above were manufactured in conformity to:
- [X] Approved design data and are in a condition for safe operation.
- [ ] Non-approved design data specified in Block 13.

15. Authorized Signature: Keith Thompson

16. Approval/Authorization No.: ODA-100129-CE

17. Name (Typed or Printed): KEITH THOMPSON

18. Date (m/d/y): JUL/12/2012

19. [ ] 14 CFR 43 - Return to Service [ ] Other regulation specified in Block 13

Certifies that unless otherwise specified in Block 13, the work identified in Block 12 and described in Block 13 was accomplished in accordance with Title 14, Code of Federal Regulations, part 43 and in respect to that work the items are approved for return to service.

20. Authorized Signature:

21. Approval/Certificate No.:

22. Name (Typed or Printed):

23. Date (m/d/y):

User / Installer Responsibilities

It is important to understand that the existence of this document alone does not automatically constitute authority to install the part/component/assembly. Where the user/installer performs work in accordance with the national regulations of an airworthiness authority different than the airworthiness authority of the country specified in Block 1, it is essential that the user/installer ensures that his/her airworthiness authority accepts parts/components/assemblies from the airworthiness authority of the country specified in Block 1. In all cases, aircraft maintenance records must contain an installation certification issued in accordance with the national regulations by the user/installer before the aircraft may be flown. Statements in Blocks 14 and 19 do not constitute installation certification.

FAA Form 8130-3 (6-01) * Installer must cross-check eligibility with applicable technical data. NSN: 0052-00-012-0005

Photocopie effectuée le 27/07/2018
au titre d'un délotissement de 1 pièce(s)
sur un total de 100 pièces
par SAN de la société ATIS

38

1. Approving National Aviation Authority/Country: FAA/UNITED STATES	2. AUTHORIZED RELEASE CERTIFICATE FAA FORM 8130-3, AIRWORTHINESS APPROVAL TAG	3. Form Tracking Number: 3536653
4. Organization Name and Address: Cessna Aircraft Company (PC4) Cessna Parts Distribution Dept. 702 5800 E Pawnee, Wichita, KS 67218		5. Work Order/Contract/Invoice Number: 1205392

6. Item:	7. Description:	8. Part Number:	9. Eligibility: *	10. Quantity:	11. Serial/Batch Number:	12. Status/Work:
8	NUT	MS21042-3	N/A	100	N/A	New

13. Remarks:

EXPORT MARTINIQUE

PO# 1006752

14. Certifies the items identified above were manufactured in conformity to:

- [X] Approved design data and are in a condition for safe operation.
- [ ] Non-approved design data specified in Block 13

15. Authorized Signature: Keith Thompson

16. Approval/Authorization No.: ODA-100129-CE

17. Name (Typed or Printed): KEITH THOMPSON

18. Date (m/d/y): JUL/12/2012

19. [ ] 14 CFR 43.9 Return to Service [ ] Other regulation specified in Block 13 — certifies that unless otherwise specified in Block 13 the work identified in Block 12 and described in Block 13 was accomplished in accordance with Title 14, Code of Federal Regulations, parts 43 and 91 in respect to that work. The items are approved for return to service.

20. Authorized Signature:

21. Approval/Certificate No.:

22. Name (Typed or Printed):

23. Date (m/d/y):

User / Installer Responsibilities

It is important to understand that the existence of this document alone does not automatically constitute authority to install the part/component/assembly. Where the user/installer performs work in accordance with the national regulations of an airworthiness authority different than the airworthiness authority of the country specified in Block 1, it is essential that the user/installer ensures that his/her airworthiness authority accepts parts/components/assemblies from the airworthiness authority of the country specified in Block 1.
Statements in Blocks 14 and 19 do not constitute installation certification. In all cases, aircraft maintenance records must contain an installation certification issued in accordance with the national regulations by the user/installer before the aircraft may be flown.

FAA Form 8130-3 (6-01) * Installer must cross-check eligibility with applicable technical data. NSN: 0052-00-012-8005

ITIS OE
R.145.566
DFC

3536653
ITEM: 8 PN: MS21042-3
ORDER: 3536653 SN/LOT: N/A
8
QTY: 100
U/M: EA
DESC: NUT

Photocopie effectuée le 27/09/2018
au titre d'un délotissement de 2 pièce(s)
sur un total de 100 pièces
par _____ de la société ATIS

AVIALT - TRUE CERTIFIED COPY - 08/02/2018 - WCOOKS - 7364587470

(40)

1. Approving Civil Aviation Authority/Country: FAA/UNITED STATES	2. **AUTHORIZED RELEASE CERTIFICATE** FAA Form 8130-3, AIRWORTHINESS APPROVAL TAG	3. Form Tracking Number: ST0904365
4. Organization Name and Address: Piper Aircraft, Inc. 2926 Piper Drive Vero Beach, FL 32960 USA	PC 206	5. Work Order / Contract / Invoice Number: ST0904365 / 210008000 / SH0104714 Page 1 of 1

6. Item:	7. Description:	8. Part Number:	9. Quantity:	10. Serial Number:	11. Status/Work:
10	NEOPRENE SHAPE EXTRUDED	189-139	156	N/A	NEW

12. Remarks: Airworthiness Approval

Expires on 03-31-20

13a. Certifies the items identified above were manufactured in conformity to:

[X] Approved design data and are in condition for safe operation.

[ ] Non-approved design data specified in Block 12.

14a. [ ] 14 CFR 43.9 Return to Service/ [ ] Other regulation specified in Block 12

Certifies that unless otherwise specified in Block 12, the work identified in Block 11 and described in Block 12 was accomplished in accordance with Title 14, Code of Federal Regulations, part 43 and in respect to that work, the items are approved for return to service.

13b. Authorized Signature:	13c. Approval/Authorization No: PC206	14b. Authorized Signature:	14c. Approval/Certificate No.:
13d. Name (Typed or Printed): Wilson, James	13e. Date (dd/mmm/yyyy): 14/Jun/2017	14d. Name (Typed or Printed):	14e. Date (dd/mmm/yyyy):

User/Installer Responsibilities

It is important to understand that the existence of this document alone does not automatically constitute authority to install the aircraft engine/propeller/article.

Where the user/installer performs work in accordance with the national regulations of an airworthiness authority different than the airworthiness authority of the country specified in Block 1, it is essential that the user/installer ensures that his/her airworthiness authority accepts aircraft engine(s)/propeller(s)/article(s) from the airworthiness authority of the country specified in Block 1.

Statements in Blocks 13a and 14a do not constitute installation certification. In all cases, aircraft maintenance records must contain an installation certification issued in accordance with the national regulations by the user/installer before the aircraft may be flown.

Piper

Packing Slip SH0104714 Original
Date 06-19-2017

Sales Order ST0904365
Page 17

210008000 AVIALL CENTRAL WAREHOUSE
2750 REGENT BLVD. DFW AIRPORT, Dallas, TX, 75261, USA

AVIALL CENTRAL WAREHOUSE
2750 REGENT BLVD. DFW AIRPORT
Dallas TX 75261
UNITED STATES OF AMERICA

Customer Order No.	Date	Ship Via	Ship Date	Point of Origin
0045580911	06-30-2017	Fedex Ground	06-30-2017	Vero Beach, FL 32966 USA

Aircraft S/N :

Line	Order	Item	Order Qty	Unit	Description	Qty Shipped	Backorder	Pl.Rec.Dt.
567	ST0904365	189-139	156.00	ft	NEOPRENE SHAPE EXTRUDED	156.00		06-02-2017

HarmC 4016.93.5050 Sch3 4016.93.0000 ECCN 9A991.d Shelf Life 3 Years Country USA
S/L 3-2020

Shipment Reference : SH0104714 / 6/19/17
SHIP FEDEX GRD BILL ACCT 0752-6857-2
FOR FEDEX GRD UNDER 150 LBS PER PACKAGE
AND TOTAL SHIPMENT 400 LBS OR LESS
ALL OTHER PLEASE REFER TO AVIALL
SHIPPING INSTRUCTIONS DATED 05/07/09

ITEM 189-139=PI
BATCH 7364587470
JWILLIS2
08/27/17

Material herein has been made in conformance with all Federal wage and hour laws. The parts listed on this document, were produced and/or supplied under FAA Production Certificate 206.
Merchandise shipped according to order cannot be returned without our permission. All claims for damages should be made direct to transportation agency.
Piper Parts Limited Warranty: http://www.piper.com/warranty/

NOTE:
REMIT PAYMENT TO:
Piper Aircraft, Inc.
2926 Piper Drive
Vero Beach, FL 32960-1964

AVIALL - TRUE CERTIFIED COPY - 08/02/2018 - WCOOKS - 7364587470

40-2

40-3

1. Approving Civil Aviation Authority/Country: FAA/United States	2. **AUTHORIZED RELEASE CERTIFICATE** FAA Form 8130-3, AIRWORTHINESS APPROVAL TAG	3. Form Tracking Number: 7364587470 1000000044736057

4. Organization Name and Address:	5. Work Order/Contract/Invoice Number:
AVIALL SERVICES INC. 2750 REGENT BLVD DFW AIRPORT, TX 75261	1869

6. Item:	7. Description:	8. Part Number:	9. Quantity:	10. Serial Number:	11. Status/Work:
1.	NEOPRENE SHAPE EXTRUDED	189-139	1	N/A	NEW

12. Remarks:

MQ
WAL
1418

SHELF LIFE EXPIRATION DATE: 03-31-2020

THE PRODUCT(S)/ARTICLE(S) SHIPPED UNDER THIS APPROVAL WERE PRODUCED BY PIPER AIRCRAFT INC..

ATIS OE
FR.145.566
DDU

13a. Certifies the items identified above were manufactured in conformity to:	14a. ☐ 14 CFR 43.9 Return to Service ☐ Other regulation specified in Block 12
☒ Approved design data and are in a condition for safe operation. ☐ Non-approved design data specified in Block 12.	Certifies that unless otherwise specified in Block 12, the work identified in Block 11 and described in Block 12 was accomplished in accordance with Title 14, Code of Federal Regulations, part 43 and in respect to that work, the items are approved for return to service.

13b. Authorized Signature:	13c. Approval/Authorization No.:	14b. Authorized Signature:	14c. Approval/Certificate No.:
James Ferris	726425056		
13d. Name (Typed or Printed):	**13e. Date (dd/mmm/yyyy):**	**14d. Name (Typed or Printed):**	**14e. Date (dd/mmm/yyyy):**
JAMES FERRIS	02 AUG 2018		

User/Installer Responsibilities

It is important to understand that the existence of this document alone does not automatically constitute authority to install the aircraft engine/propeller/article. Where the user/installer performs work in accordance with the national regulations of an airworthiness authority different than the airworthiness authority of the country specified in Block 1, it is essential that the user/installer ensures that his/her airworthiness authority accepts aircraft engine(s)propeller(s)/ article(s) from the airworthiness authority of the country specified in the Block 1. Statements in Blocks 13a and 14a do not constitute installation certification. In all cases, aircraft maintenance records must contain an installation certification issued in accordance with the national regulations by the user/installer before the aircraft may be flown.

Southern Cross Aviation www.scross.com I407153 1032788 P/N M3081 Item 1 Qty 3 Ctrl# 393942 Ctrld 3

1. Approving Civil Aviation Authority/Country: FAA/United States	2. **AUTHORIZED RELEASE CERTIFICATE** FAA Form 8130-3, AIRWORTHINESS APPROVAL TAG	3. Form Tracking Number: 503114-01-001

4. Organization Name and Address: Champion Aerospace LLC PQ1287CE-D
1230 Old Norris Road
Liberty, SC 29657-3508

5. Work Order/Contract/Invoice Number: P383556

6. Item:	7. Description:	8. Part Number:	9. Quantity:	10. Serial Number:	11. Status/Work:
1	DIST BLOCK & GEAR ASSY.	K3822	18	N/A	NEW
2	HARNESS	M1780	2	N/A	NEW
3	CONTACT POINT KIT	M3081	215	N/A	NEW

12. Remarks:
AIRWORTHINESS APPROVAL
Item 1: This part consists of the following FAA-PMA parts/subcomponents; M3822,M3021,M3826
Item 3: This part consists of the following FAA-PMA parts/subcomponents; M924,M952,M3611,M1827,M2531,M3020 M3042

13a. Certifies the items identified above are manufactured in conformity to:
[X] Approved design data and are in a condition for safe operation.
[ ] Non-approved design data specified in Block 12.

14a. [ ] 14 CFR 43.9 Return to Service [ ] Other regulations specified in Block 12
Certified that unless otherwise specified in Block 12, the work identified in Block 11 and described in Block 12 was accomplished in accordance with Title 14, Code of Federal Regulations, part 43 and in respect to that work, the items are approved for return to service.

13b. Authorized Signature:	13c. Approval/Authorization No:	14b. Authorized Signature:	14c. Approval/Certificate No:
Adam B. McNine	374929003		
13d. Name (Typed or Printed): ADAM B. MCNINE	**13e. Date (dd/mmm/yyyy):** 28/Mar/2016	**14d. Name (Typed or Printed):**	**14e. Date (dd/mmm/yyyy):**

CERTIFIED TRUE COPY

User/Installer Responsibilities

It is important to understand that the existence of this document alone does not automatically constitute authority to install the aircraft engine/propeller/article.

Where the user/installer performs work in accordance with the national regulations of an airworthiness authority different than the airworthiness authority of the country specified in Block 1, it is essential that the user/installer ensures that his/her airworthiness authority accepts aircraft engine(s)/propeller(s)/article(s) from the airworthiness authority of the country specified in Block 1.

Statements in Blocks 13a and 14a do not constitute certification. In all cases, aircraft maintenance records must contain an installation certification issued in accordance with the national regulations by the user/installer before the aircraft may be flown.

FAA Form 8130-3 (02-14) NSN: 0052-00-012-9005

Photocopie effectuée le 2/10/2018
au titre d'un délotissement de 2 pièce(s)
sur un total de 215 pièces
par RAC de la société ATIS

ATIS OE
FR.145.566
DDU

(42)

Photocopie effectuée le 02/10/18
au titre d'un délotissement de 2 pièce(s)
sur un total de 100 pièces
par JAN de la société ATIS

1. Approving National Aviation Authority/Country: FAA/UNITED STATES	2. AUTHORIZED RELEASE CERTIFICATE FAA FORM 8130-3, AIRWORTHINESS APPROVAL TAG				3. Form Tracking Number: 3524633	
4. Organization Name and Address: Cessna Aircraft Company (PC4) Cessna Parts Distribution Dept. 702 5800 E Pawnee, Wichita, KS 67218					5. Work Order/Contract/Invoice Number: 1202620	
6. Item: 4	7. Description: PIN COTTER	8. Part Number: MS24665-132	9. Eligibility: N/A	10. Quantity: 100	11. Serial/Batch Number: N/A	12. Status/Work: New

13. Remarks:
EXPORT UNITED STATES
ATIS OE FR.145.566 RFC
PO# 1006505

14. Certifies the items identified above were manufactured in conformity to:
[X] Approved design data and are in a condition for safe operation.
[ ] Non-approved design data specified in Block 13.

15. Authorized Signature: Keith Thompson
16. Approval/Authorization No.: ODA-100129-CE
17. Name (Typed or Printed): KEITH THOMPSON
18. Date (m/d/y): JUN/29/2012

User/Installer Responsibilities

It is important to understand that the existence of this document alone does not automatically constitute authority to install the part/component/assembly. Where the user/installer performs work in accordance with the national regulations of an airworthiness authority different than the airworthiness authority of the country specified in Block 1, it is essential that the user/installer ensures that his/her airworthiness authority accepts parts/components/assemblies from the airworthiness authority of the country specified in Block 1.
Statements in Blocks 14 and 19 do not constitute installation certification. In all cases, aircraft maintenance records must contain an installation certification issued in accordance with the national regulations by the user/installer before the aircraft may be flown.

FAA Form 8130-3 (5-01) * Installer must cross-check eligibility with applicable technical data. NSN: 0052-00-012-9005

TEM: 4 3524633 PN: MS24665-132
ORDER: 3524633 SN/LOT: N/A
DESC: PIN COTTER
QTY: 100
UM: EA

43

Photocopie effectuée le 03/10/2018
au titre d'un délotissement de 4 pièce(s)
sur un total de 100 pièces
par [illegible] de la société ATIS

ITEM: 4 3524633 PN: MS24665-132
ORDER: 3524633 SN/LOT: N/A
DESC: PIN COTTER
QTY: 100
UNIT: EA

1. Approving National Aviation Authority / Country: FAA/UNITED STATES	2. AUTHORIZED RELEASE CERTIFICATE FAA FORM 8130-3, AIRWORTHINESS APPROVAL TAG		3. Form Tracking Number: 3524633
4. Organization Name and Address: Cessna Aircraft Company (PC4) Cessna Parts Distribution Dept. 702 5800 E Pawnee, Wichita, KS 67218			5. Work Order/Contract/Invoice Number: 1202620

6. Item:	7. Description:	8. Part Number:	9. Eligibility: *	10. Quantity:	11. Serial/Batch Number:	12. Status/Work:
4	PIN COTTER	MS24665-132	N/A	100	N/A	New

13. Remarks:
EXPORT UNITED STATES

ATIS OE FR.145.566 RFC

PO# 1006565

14. Certifies the items identified above were manufactured in conformity to:
☒ Approved design data and are in a condition for safe operation.
☐ Non-approved design data specified in Block 13.

☐ 14 CFR 43.9 Return to Service ☐ Other (Refer exceptions in Block 13)
Certifies that unless otherwise specified in Block 13 the work identified in Block 12 was performed in accordance with Title 14, Code of Federal Regulations, PART 43 and in respect to that work the items are approved for return to service.

15. Authorized Signature: Keith Thompson	16. Approval/Authorization No.: ODA-100129-CE	20. Authorized Signature:	21. Approval/Certificate No.:
17. Name (Typed or Printed): KEITH THOMPSON	18. Date (m/d/y): JUN/29/2012	22. Name (Typed or Printed):	23. Date (m/d/y):

User/Installer Responsibilities

It is important to understand that the existence of this document alone does not automatically constitute authority to install the part/component/assembly. Where the user/installer performs work in accordance with the national regulations of an airworthiness authority different than the airworthiness authority of the country specified in Block 1, it is essential that the user/installer ensures that his/her airworthiness authority accepts parts/components/assemblies from the airworthiness authority of the country specified in Block 1.
Statements in Blocks 14 and 15 do not constitute installation certification. In all cases, aircraft maintenance records must contain an installation certification issued in accordance with the national regulations by the user/installer before the aircraft may be flown.

FAA Form 8130-3 (6/01) * Installer must cross-check eligibility with applicable technical data. NSN: 0052-00-012-9005

44

AIRFASCO.com

2655 Harrison Ave SW
Canton, OH 44706
Ph: 330-430-6190, Fax: 330-430-6199,

Packing Slip

Original

Invoice #: 152531
Invoice Date: 12/12/2017
Time: 2:21:15 PM
Page: 1

To:
AVIALL AEROSPACE TEXAS
PO BOX 619048
DFW AIRPORT
DALLAS, TX 75261-0000
USA
ATTN: REJOE JACOB
Ph: 972-586-1903 Fax: 972-586-7995

Ship To:
AVIALL AEROSPACE TEXAS
2750 REGENT BLVD.
DFW AIRPORT
DALLAS, TX 75261-0000

Cust. PO#: 45799983 | Terms: NET 30 | Ship Via: FED EX GROUND | Ship Via Acc: 129985630
Order Date: 12/7/2017 | # of Items: 1 | # of Boxes: 1 | Weight: 21
Prepared By: | Sales Order: 125724 | Ship Log #: 1 | Ship Order:
Customer #: 15195 | VAT #: | Cust VAT #: | Ship Date: 12/12/2017
Buyer: REJOE JACOB | FOB: | AWB: | Shipment:
WO #:

Item	Part Number/Description	Shipped	BackOrd	CD	List Price	Disc	Unit Price	UOM	Total Amt
1	MS20392-3C13 PIN, MS Loc/Whse: 4C7 Control #: 154281-1 L-23310 50 PC PER PACK	2250	0	NE				EA	

ITEM MS20392-3C13=28
BATCH 7364731912
APHONGSAVAN
12/14/17

C OF C ENCLOSED!
1 BOX 21 LBS
PARTS MANUFACTURED IN THE USA
THANK YOU!

Special Instructions:

Photocopie effectuée le 03/10/2018
au titre d'un délotissement de 1 pièce(s)
sur un total de 2250 pièces
par Jan de la société ATIS

Authorized Signature:

AVIALL - TRUE CERTIFIED COPY - 08/02/2018 - WCOOKS - 7364731912

2655 Harrison Ave. SW
Canton, Ohio 44706-3047
Phone: 330-430-6190
Fax: 330-430-6199

CERTIFICATE OF CONFORMANCE

AVIALL AEROSPACE

I hereby certify that on **12/13/17** Airfasco Industries provided the supplies called for by Contract/ PO Number in **45799983** in accordance with all applicable requirements for shipment. I further state/ that the process certifications are in conformance with the contract requirements, including specifications and/or drawings, physical item identification (part number) and the quantity shown on this or attached acceptance document. The part numbers certified below have been manufactured in the United States.

Quality Assurance Representative

WM. DENT

PART NUMBER	LOT NUMBER	QUANTITY	PART NUMBER	LOT NUMBER	QUANTITY
MS20392-3C13	23310	2250			

AVIALL - TRUE CERTIFIED COPY - 08/02/2018 - WCOOKS - 7364731912

AVIALL INVOICE

SHIPMENT NBR: 5612671

(45)

DATE: 05/12/10
TIME: 13:23
EMP#: webcust
ORD TYP: QC
CURRENCY: USD

CUSTOMER P.O.: 2965
ORDER NUMBER: 0009683346- 5612671
ORDER DATE: 04/16/10

SHIP VIA: AIR FRT - COLLECT

BILL TO
011714
PIPER COOPER AIRCRAFT PARTS
FLUGHAFEN KASSELL
D-34379 CALDEN
GERMANY

SHIP TO
PIPER COOPER AIRCRAFT PARTS
FLUGHAFEN KASSELL
D-34379 CALDEN
GERMANY

#27719

SHIP FROM
08200
AVIALL CENTRAL WAREHOUSE
2750 REGENT BLVD.
DFW AIRPORT TX 75261-9048
U.S.A.

LINE	MFG	ITEM DESCRIPTION	ORDER QUANTITY	SHIP QUANTITY	BACK ORDER	UOM	UNIT PRICE	EXTENDED UNIT PRICE
		SHIPMENTS < 60 LBS UPS RED # 421-227 SHIPMENTS > 60 LBS CONTACT UTI COLLECT PH: 817 424 0037 TAYLOR VUONG AVIALL 8130-3 TAG + MFG COFC REQUIRED 8130 ADDRESS fLUGHAFEN kASSEL CALDEN D-34379 GERMANY freight account:421-227 PLEASE SHIP OUT ON WEDNESDAY						
33	PI	480-875 (1) PIN HINGE HAZ NR Schedule B: 7318190000 Country of Origin: U.S.A.	4	1	ECCN: 9A991	0 EA		
		LOT 0510327372 EA 000116		1				
97	28	MS20392-3C13 CLEVIS PIN, 50PK HAZ NR Schedule B: 8803300010	50	50		0 EA		
		LOT 0510326000 EA 000117		50				

Photocopie effectuée le 03/10/2018
au titre d'un délotissement de 1 pièce(s)
sur un total de 50 pièces
par JAN de la société ATIS

ATIS OE FR.145.566 RFC

CERTIFICATE OF CONFORMANCE

It is hereby certified that Aviall Services, Inc., is an approved distributor and meets all requirements of ISO9001, AS9100, AS9120 and AC 00-56 at 2750 Regent Blvd. DFW Airport, Texas. The products, articles or parts referenced on this document are in new or overhauled condition and were purchased from an approved source (FAA, EASA, TCCA, Mil Spec or Commercial). The Original Manufacturers' Certifications are maintained on file at our central office location, and copies are available upon request or at Aviall.com. For overhauled or repaired products, articles or parts, the original FAA 8130-3 / EASA Form 1 (Return to Service) or Yellow Tag, from the FAA/JAA/EASA approved Air Agency are attached to the component.

JR Hofmann, Director, Quality Assurance & Training — 05/12/10 Date

AV18 R5-06

DISCOUNT TERMS APPLY ONLY TO SUB TOTAL. ALL RETURNED MERCHANDISE SUBJECT TO HANDLING FEE.

THIS IS TO CERTIFY THAT AVIALL HAS COMPLIED WITH THE PROVISIONS OF THE FAIR LABOR STANDARDS ACT OF 1938 AMENDED.

CUSTOMER COPY

Printed on: 13/06/2018 12:34
by Laurent NORE Phn Fax E-Mail

AMC SERVICEABLE

MATERIAL

P/N	**MS20392-3C13**
S/N / Batch	**0510326000**
Descrip.	CLEVIS PIN
Qty. 1 Owner:	ATISAWAK
ATIS	**PI00**

PAR-1120 GRN: MREC 1413-71

CONSULT AMS TO GET THE LATEST SITUATION

LAST CERTIFICATION NEW

DATE 05/12/2010 SLL NEVER

REF. AVIALL27719

	TS (FH)	CS (FC)
INS	0	0
OHL	0	0
NEW	0	0

FORM AMS/30152 REV 02

L145.566
R0 Nov09

60

1. Approving National Aviation Authority / Country: FAA/UNITED STATES

2. AUTHORIZED RELEASE CERTIFICATE
FAA FORM 8130-3, AIRWORTHINESS APPROVAL TAG

3. Form Tracking Number: 2207388

4. Organization Name and Address: Cessna Aircraft Company
Cessna Parts Distribution Dept. 702
5800 E Pawnee, Wichita, KS 67218

5. Work Order/Contract/Invoice Number: 875691

6. Item:	7. Description:	8. Part Number:	9. Eligibility:	10. Quantity:	11. Serial/Batch Number:	12. Status/Work:
3	PACKING	MS28775-012	N/A	100	4006	New

13. Remarks:
EXPORT UNITED STATES
Purge de fiche TP BN2
PO# 018344

14. Certifies the items identified above were manufactured in conformity to:
☒ Approved design data and are in a condition for safe operation.
☐ Non-approved design data specified in Block 13.

15. Authorized Signature: Theresa A Mavec

16. Approval/Authorization No.: 100129CE

17. Name (Typed or Printed): THERESA A. MAVEC, ODARF

18. Date (m/d/y): OCT/29/2008

19. ☐ 14 CFR 43d Return to Service ☐ Other regulation specified in Block 13
Certifies that unless otherwise specified in Block 13 the work identified in Block 12 and described in Block 11 was accomplished in accordance with the 14 Code of Federal Regulations, part 43, and in regard to that work the items are approved for return to service.

20. Authorized Signature:

21. Approval/Certificate No.:

22. Name (Typed or Printed):

23. Date (m/d/y):

User / Installer Responsibilities

It is important to understand that the existence of this document alone does not automatically constitute authority to install the part/component/assembly. Where the user/installer performs work in accordance with the national regulations of an airworthiness authority different than the airworthiness authority of the country specified in Block 1, it is essential that the user/installer ensure that the airworthiness authority accepts parts/components/assemblies from the airworthiness authority of the country specified in Block 1.
Statements in Blocks 14 and 19 do not constitute installation certification. In all cases, aircraft maintenance records must contain an installation certification issued in accordance with the national regulations by the user/installer before the aircraft may be flown.

FAA Form 8130-3 (6-01) * Installer must cross-check eligibility with applicable technical data. NSN: 0052-00-012-9005

ITEM: 3 2207388
ORDER: 2207388N/LOT: 4006 PN: MS28775-012 3
DESC: PACKING QTY: 100 U/M: EA

Photocopie effectuée le 24/10/18
au titre d'un délotissement de 100 pièce(s)
sur un total de 100 pièces
par JAN de la société ATIS

(47)

1. Approving National Aviation Authority / Country: FAA/UNITED STATES

2. **AUTHORIZED RELEASE CERTIFICATE**
FAA FORM 8130-3, AIRWORTHINESS APPROVAL TAG

3. Form Tracking Number: 3352367

4. Organization Name and Address:
Cessna Aircraft Company (PC4)
Cessna Parts Distribution Dept. 702
5800 E Pawnee, Wichita, KS 67218

5. Work Order/Contract/Invoice Number: 1160708

6. Item:	7. Description:	8. Part Number:	9. Eligibility: *	10. Quantity:	11. Serial/Batch Number:	12. Status/Work:
17	PACKING	MS28775-114	N/A	25	1Q11	New

13. Remarks:
EXPORT MARTINIQUE

ATTS OE FR.145.566

PO# 1003793

14. Certifies the items identified above were manufactured in conformity to:
☒ Approved design data and are in a condition for safe operation.
☐ Non-approved design data specified in Block 13.

19. ☐ 14 CFR 43.9 Return to Service ☐ Other regulation specified in Block 13
I certify that unless otherwise specified in Block 13, the work identified in Block 12 and described in Block 9 was accomplished in accordance with the 14 Code of Federal Regulations, part 43 and in respect to that work the items are approved for return to service.

15. Authorized Signature: Keith Thompson

16. Approval/Authorization No.: ODA-100129-CE

20. Authorized Signature:

21. Approval/Authorization No.:

17. Name (Typed or Printed): KEITH THOMPSON

18. Date (m/d/y): JAN/16/2012

22. Name (Typed or Printed):

23. Date (m/d/y):

User / Installer Responsibilities

It is important to understand that the existence of this document alone does not automatically constitute authority to install the part/component/assembly.
Where the user/installer performs work in accordance with the national regulations of an airworthiness authority different than the airworthiness authority of the country specified in Block 1, it is essential that the user/installer ensures that his/her airworthiness authority accepts parts/components/assemblies from the airworthiness authority of the country specified in Block 1
Statements in Blocks 14 and 19 do not constitute installation certification. In all cases, aircraft maintenance records must contain an installation certification issued in accordance with the national regulations by the user/installer before the aircraft may be flown.

FAA Form 8130-3 (6-01) * Installer must cross-check eligibility with applicable technical data. NSN: 0052-00-012-9005

ITEM: 17 3352367
P/N: MS28775-114
ORDER: 3352367 SN/LOT: 1Q11
17 Q12-25
DESC: PACKING U/M: EA

Photocopie effectuée le 06/10/18
au titre d'un délotissement de 1 pièce(s)
sur un total de 25 pièces
par [illegible]

(48)

Piper

Packing Slip SH0061972 Original
Date 01-15-2016

Sales Order ST0887360
Page 110

210008000 AVIALL
2750 REGENT BLVD., Dallas, TX, 75261, USA

AVIALL
P.O. Box 619048
2750 REGENT BLVD.
Dallas TX 75261
UNITED STATES OF AMERICA

Customer Order No.	Date	Ship Via	Ship Date	Point of Origin
0045310917	01-12-2016	Fedex Ground	01-12-2016	Vero Beach, FL 32960 USA

Aircraft S/N :

Line	Order	Item	Order Qty	Unit	Description	Qty Shipped	Backorder	Pl.Rec.Dt.
549	ST0887360	494-062	100.00	ea	WASHER SEAL	100.00		01-08-2016

HarmC 7318.29.0000 SchB 7318.29.0000 ECCN 9A991.d Shelf Life 15 Years Country USA

S/L 3/2030

Shipment Reference : SH0061972 1/15/2016
SHIP FEDEX GRD BILL ACCT 0752-6857-2
FOR FEDEX GRD UNDER 150 LBS PER PACKAGE
AND TOTAL SHIPMENT 400 LBS OR LESS
ALL OTHER PLEASE REFER TO AVIALL
SHIPPING INSTRUCTIONS DATED 05/07/09

ITEM 494-062 = PI
BATCH 7364172799
JSINCLAIR
01/25/16

Printed on 15/08/2018 14:35
by Laurent NORE Phn Fax E-Mail

AMC SERVICEABLE

MATERIAL

P/N	494-062		
S/N / Batch	ATISBR747		
Descrip.	WASHER SEAL		
Qty. 1		Owner:	ATISAWAK
ATIS	PI32		

PAR-1168
GRN: MREC 1520-20

LAST CERTIFICATION NEW

DATE	26/02/2016	SLL	31/03/2030
REF.	PIPER7364172799		

	TS (FH)	CS (FC)
INS	0	0
OHL	0	0
NEW	0	0

FORM AMS/30152 REV 02

CONSULT AMS TO GET THE LATEST SITUATION

ATIS OE
FR.145.566
DDU

Material herein has been made in conformance with all Federal wage and hour laws. The parts listed on this document, were produced and/or supplied under FAA Production Certificate 205.
Merchandise shipped according to order cannot be returned without our permission. All claims for damages should be made direct to transportation agency.
Piper Parts Limited Warranty: http://www.piper.com/warranty/

Form No. 012-343 Rev.07/2014

NOTE:
REMIT PAYMENT TO:
Piper Aircraft, Inc.
2926 Piper Drive
Vero Beach, FL 32960-1964

47 – 18 – 11 – 02 – 08 – 00 511

WASHER:

02/26/2016

16:16:28

CU20026316 AVIALL ONE TIME SHIP TO

310003860083

2 EA

N

EX – 04/01/2030

APPROVAL TYPE,PC

OUTB

ID 1000000019097824

30

Line Number

C Group – 0000744777

ECC Doc # 1001947184

STDOD

BATCH 7364172799

HU: 100003523266

CPO 16 – 35532 MS

PNR 494 – 062 = PI

SHQ 2

DOMCT

UNT EA

02/26/2016

(49)

ITEM: 18 3352367 PN: MS28775-113 18
ORDER: 3352367 SN/LOT: 1Q11 DESC: O-RING
QTY: 25 U/M: EA

1. Approving National Aviation Authority / Country: FAA/UNITED STATES	2. AUTHORIZED RELEASE CERTIFICATE FAA FORM 8130-3, AIRWORTHINESS APPROVAL TAG	3. Form Tracking Number: 3352367
4. Organization Name and Address: Cessna Aircraft Company (PC4) Cessna Parts Distribution Dept. 702 5800 E Pawnee, Wichita, KS 67218		5. Work Order/Contract/Invoice Number: 1160708

8. Item:	7. Description:	6. Part Number:	9. Eligibility: *	10. Quantity:	11. Serial/Batch Number:	12. Status/Work:
18	O-RING	MS28775-113	N/A	25	1Q11	New

13. Remarks:

EXPORT MARTINIQUE

ATIS OE FR.145.566 RFC

PO# 1003793

14. Certifies the items identified above were manufactured in conformity to:
- [X] Approved design data and are in a condition for safe operation.
- [ ] Non-approved design data specified in Block 13

19. [X] 14 CFR 43.9 (a) and (b) or equivalent [ ] Other regulation specified in Block 13
certifies that the maintenance specified in Block 12 and described in Block 13 was accomplished in accordance with Title 14 Code of Federal Regulations, Part 43 and in respect to that work the items are approved for return to service.

16. Authorized Signature: Keith Thompson	16. Approval/Authorization No.: ODA-100129-CE	20. Authorized Signature:	21. Approval/Certificate No.:
17. Name (Typed or Printed): KEITH THOMPSON	18. Date (m/d/y): JAN/16/2012	22. Name (Typed or Printed):	23. Date (m/d/y):

User/Installer Responsibilities

It is important to understand that the existence of this document alone does not automatically constitute authority to install the part/component/assembly.
Where the user/installer performs work in accordance with the national regulations of an airworthiness authority different than the airworthiness authority of the country specified in Block 1, it is essential that the user/installer ensures that his/her airworthiness authority accepts parts/components/assemblies from the airworthiness authority of the country specified in Block 1.
Statements in Blocks 14 and 19 do not constitute installation certification. In all cases, aircraft maintenance records must contain an installation certification issued in accordance with the national regulations by the user/installer before the aircraft may be flown.

FAA Form 8130-3 (6-01) * Installer must cross-check eligibility with applicable technical data. NSN: 0052-00-012-900

Photocopie effectuée le 04/10/2018
au titre d'un délotissement de 1 pièce(s)
sur un total de 25 pièces
JAN de la société ATIS

(50)

3524633
ITEM: 4 PN: MS24665-132
ORDER: 3524633 SKY-HOLT N/A
QTY: 100
U/M: EA
DESC: PIN COTTER

1. Approving National Aviation Authority/Country: FAA/UNITED STATES	2. AUTHORIZED RELEASE CERTIFICATE FAA FORM 8130-3, AIRWORTHINESS APPROVAL TAG	3. Form Tracking Number: 3524633
4. Organization Name and Address: Cessna Aircraft Company (PC4) Cessna Parts Distribution Dept. 702 5800 E Pawnee, Wichita, KS 67218		5. Work Order/Contract/Invoice Number: 1202620

6. Item:	7. Description:	8. Part Number:	9. Eligibility: *	10. Quantity:	11. Serial/Batch Number:	12. Status/Work:
4	PIN COTTER	MS24665-132	N/A	100	N/A	New

13. Remarks:

EXPORT UNITED STATES

ATIS OE FR.145.566 RFC

PO# 1006565

14. Certifies the items identified above were manufactured in conformity to:
- [X] Approved design data and are in a condition for safe operation.
- [ ] Non-approved design data specified in Block 13.

15. Authorized Signature: Keith Thompson

16. Approval/Authorization No.: ODA-100129-CE

17. Name (Typed or Printed): KEITH THOMPSON

18. Date (m/d/y): JUN/29/2012

19. [ ] 14 CFR Part 145 or [ ] Other equivalent specified in Block 13. Certifies that unless otherwise specified in Block 13 the item identified in Block 12 and described in Block 13 was accomplished in accordance with Title 14 Code of Federal Regulations parts 43 and in respect to that work the items are approved for release to service.

20. Authorized Signature:

21. Approval/Certificate No.:

22. Name (Typed or Printed):

23. Date (m/d/y):

User/Installer Responsibilities

It is important to understand that the existence of this document alone does not automatically constitute authority to install the part/component/assembly. Where the user/installer performs work in accordance with the national regulations of an airworthiness authority different than the airworthiness authority of the country specified in Block 1, it is essential that the user/installer ensures that his/her airworthiness authority accepts parts/components/assemblies from the airworthiness authority of the country specified in Block 1

Statements in Blocks 14 and 19 do not constitute installation certification. In all cases, aircraft maintenance records must contain an installation certification issued in accordance with the national regulations by the user/installer before the aircraft may be flown.

FAA Form 8130-3 (6-01) * Installer must cross-check eligibility with applicable technical data. NSN: 0052-00-012-9005

Photocopie effectuée le 04/10/2018
au titre d'un délotissement de 3 pièce(s)
sur un total de 100 pièces
par JGN de la société ATIS

CUST PO NO 45863850 SO NO 566495

FROM: BILD INDUSTRIES, INC. 800 CLEARWATER LOOP POST FALLS, ID 83854

SHIP TO
AVIALL SERVICES, INC.
AVIALL CENTRAL WAREHOUSE
2750 REGENT BOULEVARD
DFW AIRPORT TX 75261

CUST PO NO 45863850 SO NO 566495

FROM: BILD INDUSTRIES, INC. 800 CLEARWATER LOOP POST FALLS, ID 83854

SHIP TO
AVIALL SERVICES, INC.
AVIALL CENTRAL WAREHOUSE
2750 REGENT BOULEVARD
DFW AIRPORT TX 75261

CUST PO NO 45863850 SO NO 566495

FROM: BILD INDUSTRIES, INC. 800 CLEARWATER LOOP POST FALLS, ID 83854

SHIP TO
AVIALL SERVICES, INC.
AVIALL CENTRAL WAREHOUSE
2750 REGENT BOULEVARD
DFW AIRPORT TX 75261

CUSTOMER BILL TO ADDRESS	COMPLETE CUSTOMER PO NO.	BILL TO NO.	SHIP TO NO.	PAGE
AVIALL SERVICES, INC. ATTN. AP DEPT. P.O. BOX 619048 DALLAS TX 752619048	45863850		ASI007	1
	BUYER NAME & PHONE NO. MICHELLE			

PACKING SLIP

INSPECT IMMEDIATELY

LINE	QTY ORDERED	QTY SHIPPED		PART / LOT NUMBER	CUSTOMER P.O. NO.	DESCRIPTION
1	200000	200000	C	NAS1149F0332P 91982/$A8328	45863850	WASHER 200 PER QTY
	BX31-38-28					
2	1	1	C	S/C MANUFACTURE CERT	45863850	CERTIFICATION QTY
3	1	1	C	MFG: Anillo 3-16-18 KR	45863850	QTY
4	1	1	C	COO: USA	45863850	COUNTRY OF ORIGIN QTY

ITEM NAS1149F0332P=28
BATCH 7364820396
KCONTRERAS 03/30/18

CERTIFICATION OF CONFORMANCE

WE HEREBY CERTIFY THAT THE MERCHANDISE INCLUDED ON THIS PACKING LIST IS IN CONFORMANCE WITH AN-MS-NAS OR APPLICABLE SPECIFICATIONS AND OR DRAWINGS.

CAGE CODE 31222

QUALITY CONTROL MANAGER: Andy Olson

DATE: MAR 21 2018

TOTAL WT	NO CTNS			DATE SHIPPED	SHIPPED VIA		SIGNATURE MERCHANDISE RECEIVED
				3-21-18	CV		X

Photocopie effectuée le 04/10/18
au titre d'un délotissement de 2 pièce(s)
sur un total de 200 pièces
par Julie de la société ATIS

ANILLO *Industries, Inc.*
2090 NORTH GLASSELL STREET, ORANGE, CA 92865-3391 USA
PLEASE REMIT TO
P.O. BOX 5586 ORANGE, CA 92863-5586 USA
(714)637-7000 (562)924-6632 FAX(714) 637-3022 CAGE CODE: 10630

AS9100 NADCAP CP ISO 9001 CERTIFIED

659860

Packing List & Certification

WE ACCEPT
VISA/MASTER/DISCOVER/AMEX

SOLD TO 1215	SHIP TO A
BILD INDUSTRIES, INC. ATTN: ACCOUNTS PAYABLE DEPT. 800 S CLEARWATER LOOP POST FALLS, ID 83854	BILD INDUSTRIES, INC. 800 S CLEARWATER LOOP POST FALLS,ID 83854

DATE ORDER REC'D	ORDER NUMBER	INVOICE DATE	SHIPPED VIA	TERMS
11/21/2016	91982		FEDXG/183494152	1% 10 DAYS, NET 30

ITEM	ORDERED	SHIPPED	DESCRIPTION	NET WEIGHT
2	300,000	300,000	AN960-10L REV 21 /LOT#SA8328 /QCR:1,4,6,8,15,17,28, NAS1149F0332P ECCN: 9A991 Schedule B#: 7318.22.0000 COO: USNLR	

We certify that: 1. Item number 2 above is manufactured in accordance with the material and processing specifications of this order.
2. We certify that the material on this order conforms in all respects to the current applicable government and/or manufacturer's specification. Test reports are on file and are available for examination on all Anillo manufactured parts. All claims for errors or shortages must be made within 10 days after receipt of goods. No good to be returned without written authorization. All claims for defective material must filed within 30 days of shipment to receive consideration. We do not assume financial responsibility or liability from the use of products sold, other than the replacement value of the products sold, if claimed within the specified time limit above.

<< R.M.A.# REQUIRED FOR RETURNS >>

<< TO THE BEST OF OUR KNOWLEDGE, PARTS ARE MERCURY FREE >>

Certification

STAMP Anillo 31 Inspection DATE DEC 0 6 2017

BY *Ben Omidwar*
Ben Omidwar, Quality Assurance Manager

FI 4.03.05

AVIALL - TRUE CERTIFIED COPY - 09/06/2018 - BRANDEL - 7364820396

(52)

1 Approving National Aviation Authority/Country:	2. AUTHORIZED RELEASE CERTIFICATE	3. Form Tracking Number:
FAA/United States	FAA Form 8130-3, AIRWORTHINESS APPROVAL TAG	0071829649-00001

4. Organization Name and Address	5. Work Order/Contract/ Invoice Number
RAPID PARTS INVENTORY AND DISTRIBUTION DALLAS DISTRIBUTION CENTER 801 INDUSTRIAL BLVD, SUITE 100 GRAPEVINE, TX 76051 PC 8	0001528599-000140

6. Item	7. Description	8. Part Number	9. Eligibility *	10. Quantity	11. Serial/Batch Nbr	12. Status/Work
0001	WASHER, LOCK-SPRING, HELICAL	MS35338-139	N/A	100.000	N/A	NEW

13. **Remark** EXPORT AIRWORTHINESS APPROVAL

ATIS OE FR.145.566 RFC

Total time of 00.00 hours

14. **Certifies the items identified above were manufactured in conformity to:**

[X] **Approved design data and are in a condition for safe operation.**

[ ] **Non-approved design data specified in Block 13.**

19. 14 CFR 43.9 Return to Service
Other regulation specified in Block 13

Certifies that unless otherwise specified in Block 13, the work identified in Block 12 and described in Block 13 was accomplished in accordance with Title 14, Code of Federal Regulations, part 43 and in respect to that work, the items are approved for return to service.

15. Authorized Signature:	16. Approval/ Authorization No:	20. Authorized Signature:	21. Approval/ Certificate No:
Tim R Shurley	ODARF230339CE		
17. Name (Typed or Printed):	**18. Date (m/d/y):**	22. Name (Typed or Printed):	23. Date (m/d/y):
TIM R SHURLEY	FEB/10/2009		

USER/INSTALLER RESPONSIBILITIES

It is important to understand that the existence of this Document alone does not automatically constitute authority to install the part/component/assembly.

Where the user/installer work in accordance with the national regulations of an Airworthiness Authority different than the Airworthiness Authority of the country specified in block 1 it is essential that the user/installer ensure that his/her Airworthiness Authority accepts parts/components/assemblies from the Airworthiness Authority of the country specified in block 1.

Statements in block 14 and 19 do not constitute installation certification. In all cases aircraft maintenance records must contain an installation certification issued in accordance with the national regulations by the user/installer before the aircraft may be flown.

FAA Form 8130-3 (06-01) * Installer must cross check eligibility with applicable technical data.

Photocopie effectuée le 6/10/2011
au titre d'un délotissement de 2 pièce(s)
sur un total de 100 000 pièces
par _____ de la société ATIS

(53)

1. Approving Civil Aviation Authority / Country: FAA/UNITED STATES

2. **AUTHORIZED RELEASE CERTIFICATE**
FAA FORM 8130-3, AIRWORTHINESS APPROVAL TAG

3. Form Tracking Number: 4375059

4. Organization Name and Address:
Cessna Aircraft Company (PC4)
Cessna Parts Distribution Dept. 702
5800 E Pawnee, Wichita, KS 67218

5. Work Order/Contract/Invoice Number: 1404954

6. Item:	7. Description:	8. Part Number:	9. Quantity:	10. Serial Number:	11. Status/Work:
12	NUT	STD1410	10	N/A	New

12. Remarks:
EXPORT MARTINIQUE

ATIS OE FR.145.566 DDU

PO# 1022168

13a. Certifies the items identified above were manufactured in conformity to:
☒ Approved design data and are in a condition for safe operation.
☐ Non-approved design data specified in Block 12.

14a. ☐ 14 CFR 43.9 Return to Service ☐ Other regulation specified in block 12
Certifies that unless otherwise specified in Block 12, the work identified in Block 11 and described in Block 12 was accomplished in accordance with Title 14, Code of Federal Regulations, part 43 and in respect to that work, the items are approved for return to service.

13b. Authorized Signature: Marilyn K. Farber

13c. Approval/Authorization No.: ODA-100129-CE

14b. Authorized Signature:

14c. Approval/Certificate No.:

13d. Name (Typed or Printed): MARILYN K. FARBER

13e. Date (dd/mmm/yyyy): 09/OCT/2014

14d. Name (Typed or Printed):

14e. Date (dd/mmm/yyyy):

User / Installer Responsibilities
It is important to understand that the existence of this document alone does not automatically constitute authority to install the aircraft engine/propeller/article. Where the user/installer performs work in accordance with the national regulations of an airworthiness authority different than the airworthiness authority of the country specified in Block 1, it is essential that the user/installer ensures that his/her airworthiness authority accepts aircraft engine(s)/propeller(s)/article(s) from the airworthiness authority of the country specified in Block 1
Statements in Blocks 13a and 14a do not constitute installation certification. In all cases, aircraft maintenance records must contain an installation certification issued in accordance with the national regulations by the user/installer before the aircraft may be flown.

FAA Form 8130-3 (02/14) NSN: 0052-00-012-9005

1. Approving Civil Aviation Authority / Country: FAA/UNITED STATES
2. AUTHORIZED RELEASE CERTIFICATE FAA FORM 8130-3, AIRWORTHINESS APPROVAL TAG
3. Form Tracking Number: 4375059
4. Organization Name and Address: Cessna Aircraft Company (PC4) Cessna Parts Distribution Dept. 702 5800 E Pawnee, Wichita, KS 67218
5. Work Order/Contract/Invoice Number: 1404954
6. Item: 12 | 7. Description: NUT | 8. Part Number: STD1410 | 9. Quantity: 10 | 10. Serial Number: N/A | 11. Status/Work: New
12. Remarks: EXPORT MARTINIQUE
ATIS OE FR.145.566 DDU
PO# 1022168
13a. Certifies the items identified above were manufactured in conformity to: ☒ Approved design data and are in a condition for safe operation. ☐ Non-approved design data specified in Block 12.
14a. ☐ 14 CFR 43.9 Return to Service ☐ Other regulation specified in block 12
Certifies that unless otherwise specified in Block 12, the work identified in Block 11 and described in Block 12 was accomplished in accordance with Title 14, Code of Federal Regulations, part 43 and in respect to that work, the items are approved for return to service.
13b. Authorized Signature: Marilyn K. Farber
13c. Approval/Authorization No.: ODA-100129-CE
14b. Authorized Signature:
14c. Approval/Certificate No.:
13d. Name (Typed or Printed): MARILYN K. FARBER
13e. Date (dd/mmm/yyyy): 09/OCT/2014
14d. Name (Typed or Printed):
14e. Date (dd/mmm/yyyy):
User / Installer Responsibilities
It is important to understand that the existence of this document alone does not automatically constitute authority to install the aircraft engine/propeller/article. Where the user/installer performs work in accordance with the national regulations of an airworthiness authority different than the airworthiness authority of the country specified in Block 1, it is essential that the user/installer ensures that his/her airworthiness authority accepts aircraft engine(s)/propeller(s)/article(s) from the airworthiness authority of the country specified in Block 1
Statements in Blocks 13a and 14a do not constitute installation certification. In all cases, aircraft maintenance records must contain an installation certification issued in accordance with the national regulations by the user/installer before the aircraft may be flown.
FAA Form 8130-3 (02/14) NSN: 0052-00-012-9005

1. Approving Civil Aviation Authority / Country: FAA/UNITED STATES
2. AUTHORIZED RELEASE CERTIFICATE FAA FORM 8130-3, AIRWORTHINESS APPROVAL TAG
3. Form Tracking Number: 4375059
4. Organization Name and Address: Cessna Aircraft Company (PC4) Cessna Parts Distribution Dept. 702 5800 E Pawnee, Wichita, KS 67218
5. Work Order/Contract/Invoice Number: 14049
6. Item: 12 | 7. Description: NUT | 8. Part Number: STD1410 | 9. Quantity: 10 | 10. Serial Number: N/A | 11. Status/Work: New
12. Remarks: EXPORT MARTINIQUE
ATIS OE FR.145.566 DDU
PO# 1022168
13a. Certifies the items identified above were manufactured in conformity to: ☒ Approved design data and are in a condition for safe operation. ☐ Non-approved design data specified in Block 12.
14a. ☐ 14 CFR 43.9 Return to Service ☐ Other regulation specified in
Certifies that unless otherwise specified in Block 12, the work identified in Block 11 and described in Block 12 was accomplished in accordance with Title 14, Code of Federal Regulations, part 43 and in respect to the items are approved for return to service.
13b. Authorized Signature: Marilyn K. Farber
13c. Approval/Authorization No.: ODA-100129-CE
14b. Authorized Signature:
14c. Approval/Certi
13d. Name (Typed or Printed): MARILYN K. FARBER
13e. Date (dd/mmm/yyyy): 09/OCT/2014
14d. Name (Typed or Printed):
14e. Date (dd/mmm
User / Installer Responsibilities
It is important to understand that the existence of this document alone does not automatically constitute authority to install the aircraft engine/propeller/article. Where the user/installer performs work in accordance with the national regulations of an airworthiness authority different than the airworthiness authority of the country specified in Block 1, it is essential that the user/installer ensures that his/her airworthiness authority accepts aircraft engine(s)/propeller(s)/article(s) from the airworthiness authority of the country specified in Block 1
Statements in Blocks 13a and 14a do not constitute installation certification. In all cases, aircraft maintenance records must contain an installation certification issued in accordance with the national regulations by the user/installer before the aircraft may be flown.
FAA Form 8130-3 (02/14) NSN: 0052-00-

1. Approving Civil Aviation Authority / Country: FAA/UNITED STATES
2. AUTHORIZED RELEASE CERTIFICATE FAA FORM 8130-3, AIRWORTHINESS APPROVAL TAG
3. Form Tracking Number: 4375059
4. Organization Name and Address: Cessna Aircraft Company (PC4) Cessna Parts Distribution Dept. 702 5800 E Pawnee, Wichita, KS 67218
5. Work Order/Contract/Invoice Number: 1404954
6. Item: 12 | 7. Description: NUT | 8. Part Number: STD1410 | 9. Quantity: 10 | 10. Serial Number: N/A | 11. Status/Work: New
12. Remarks: EXPORT MARTINIQUE
ATIS OE FR.145.566 DDU
PO# 1022168
13a. Certifies the items identified above were manufactured in conformity to: ☒ Approved design data and are in a condition for safe operation. ☐ Non-approved design data specified in Block 12.
14a. ☐ 14 CFR 43.9 Return to Service ☐ Other regulation specified in block 12
Certifies that unless otherwise specified in Block 12, the work identified in Block 11 and described in Block 12 was accomplished in accordance with Title 14, Code of Federal Regulations, part 43 and in respect to that work, the items are approved for return to service.
13b. Authorized Signature: Marilyn K. Farber
13c. Approval/Authorization No.: ODA-100129-CE
14b. Authorized Signature:
14c. Approval/Certificate No.:
13d. Name (Typed or Printed): MARILYN K. FARBER
13e. Date (dd/mmm/yyyy): 09/OCT/2014
14d. Name (Typed or Printed):
14e. Date (dd/mmm/yyyy):
User / Installer Responsibilities
It is important to understand that the existence of this document alone does not automatically constitute authority to install the aircraft engine/propeller/article. Where the user/installer performs work in accordance with the national regulations of an airworthiness authority different than the airworthiness authority of the country specified in Block 1, it is essential that the user/installer ensures that his/her airworthiness authority accepts aircraft engine(s)/propeller(s)/article(s) from the airworthiness authority of the country specified in Block 1
Statements in Blocks 13a and 14a do not constitute installation certification. In all cases, aircraft maintenance records must contain an installation certification issued in accordance with the national regulations by the user/installer before the aircraft may be flown.
FAA Form 8130-3 (02/14) NSN: 0052-00-012-9005

ITEM: 12 ORDER: 4375059 PN: STD1410 SN/LOT: N/A 4375059 12 QTY: 10 U/M: EA DESC: NUT

1. Approving Civil Aviation Authority / Country: FAA/UNITED STATES
2. AUTHORIZED RELEASE CERTIFICATE FAA FORM 8130-3, AIRWORTHINESS APPROVAL TAG
3. Form Tracking Number: 4375059
4. Organization Name and Address: Cessna Aircraft Company (PC4) Cessna Parts Distribution Dept. 702 5800 E Pawnee, Wichita, KS 67218
5. Work Order/Contract/Invoice Number: 1404954
6. Item: 12 | 7. Description: NUT | 8. Part Number: STD1410 | 9. Quantity: 10 | 10. Serial Number: N/A | 11. Status/Work: New
12. Remarks: EXPORT MARTINIQUE
ATIS OE FR.145.566 DDU
PO# 1022168
13a. Certifies the items identified above were manufactured in conformity to: ☒ Approved design data and are in a condition for safe operation. ☐ Non-approved design data specified in Block 12.
14a. ☐ 14 CFR 43.9 Return to Service ☐ Other regulation specified in block 12
Certifies that unless otherwise specified in Block 12, the work identified in Block 11 and described in Block 12 was accomplished in accordance with Title 14, Code of Federal Regulations, part 43 and in respect to that work, the items are approved for return to service.
13b. Authorized Signature: Marilyn K. Farber
13c. Approval/Authorization No.: ODA-100129-CE
14b. Authorized Signature:
14c. Approval/Certificate No.:
13d. Name (Typed or Printed): MARILYN K. FARBER
13e. Date (dd/mmm/yyyy): 09/OCT/2014
14d. Name (Typed or Printed):
14e. Date (dd/mmm/yyyy):
User / Installer Responsibilities
It is important to understand that the existence of this document alone does not automatically constitute authority to install the aircraft engine/propeller/article. Where the user/installer performs work in accordance with the national regulations of an airworthiness authority different than the airworthiness authority of the country specified in Block 1, it is essential that the user/installer ensures that his/her airworthiness authority accepts aircraft engine(s)/propeller(s)/article(s) from the airworthiness authority of the country specified in Block 1
Statements in Blocks 13a and 14a do not constitute installation certification. In all cases, aircraft maintenance records must contain an installation certification issued in accordance with the national regulations by the user/installer before the aircraft may be flown.
FAA Form 8130-3 (02/14) NSN: 0052-00-012-9005

Photocopie certifiée conforme
au titre d'un délotissement de 05 pièce(s)
sur un total de 8 pièces
par _____ de la société ATIS

1. Approving Civil Aviation Authority/Country:	2.	3. Form Tracking Number:
FAA/United States	**AUTHORIZED RELEASE CERTIFICATE** FAA Form 8130–3, AIRWORTHINESS APPROVAL TAG	09212018-24

4. Organization Name and Address:	5. Work Order/Contract/Invoice Number:
KNISLEY WELDING INC. 3450 SWETZER ROAD, LOOMIS, CA, 95650, PQ1260NM	P94097

6. Item:	7. Description:	8. Part Number:	9. Quantity:	10. Serial Number:	11. Status/Work:
1	RH Rear Stack Assembly	K62232-00	1	266332	NEW

12. Remarks:

AIR WORTHINESS APPROVAL
This part is produced under PMA #PQ1260NM and is not a critical component.

13a. Certifies the items identified above were manufactured in conformity to:		14a. ☐ 14 CFR 43.9 Return to Service ☐ Other regulation specified in Block 12	
☑ Approved design data and are in a condition for safe operation. ☐ Non-approved design data specified in Block 12.		Certifies that unless otherwise specified in Block 12, the work identified in Block 11 and described in Block 12 was accomplished in accordance with Title 14, Code of Federal Regulations, part 43 and in respect to that work, the items are approved for return to service.	
13b. Authorized Signature:	13c. Approval/Authorization No.:	14b. Authorized Signature:	14c. Approval/Certificate No.:
	PQ1260NM		
13d. Name (Typed or Printed):	13e. Date (dd/mmm/yyyy):	14d. Name (Typed or Printed):	14e. Date (dd/mmm/yyyy):
KYLE KNISLEY	21/SEP/2018		

User/Installer Responsibilities

It is important to understand that the existence of this document alone does not automatically constitute authority to install the aircraft engine/propeller/article.

Where the user/installer performs work in accordance with the national regulations of an airworthiness authority different than the airworthiness authority of the country specified in Block 1, it is essential that the user/installer ensures that his/her airworthiness authority accepts aircraft engine(s)/propeller(s)/article(s) from the airworthiness authority of the country specified in Block 1.

Statements in Blocks 13a and 14a do not constitute installation certification. In all cases, aircraft maintenance records must contain an installation certification issued in accordance with the national regulations by the user/installer before the aircraft may be flown.

par _____ de la société ATIS

1. Approving Civil Aviation Authority/Country:	2.	3. Form Tracking Number:
FAA/United States	**AUTHORIZED RELEASE CERTIFICATE** FAA Form 8130–3, AIRWORTHINESS APPROVAL TAG	08282018-15

4. Organization Name and Address:	5. Work Order/Contract/Invoice Number:
KNISLEY WELDING INC. 3450 SWETZER ROAD, LOOMIS, CA, 95650, PQ1260NM	P93841

6. Item:	7. Description:	8. Part Number:	9. Quantity:	10. Serial Number:	11. Status/Work:
1	RH Front Stack Assembly	K62230-00	1	265838	NEW

12. Remarks:

AIR WORTHINESS APPROVAL
This part is produced under PMA #PQ1260NM and is not a critical component.

13a. Certifies the items identified above were manufactured in conformity to:

☑ Approved design data and are in a condition for safe operation.

☐ Non-approved design data specified in Block 12.

14a. ☐ 14 CFR 43.9 Return to Service ☐ Other regulation specified in Block 12

Certifies that unless otherwise specified in Block 12, the work identified in Block 11 and described in Block 12 was accomplished in accordance with Title 14, Code of Federal Regulations, part 43 and in respect to that work, the items are approved for return to service.

13b. Authorized Signature:	13c. Approval/Authorization No.:	14b. Authorized Signature:	14c. Approval/Certificate No.:
	PQ1260NM		
13d. Name (Typed or Printed):	**13e. Date (dd/mmm/yyyy):**	**14d. Name (Typed or Printed):**	**14e. Date (dd/mmm/yyyy):**
KYLE KNISLEY	28/AUG/2018		

User/Installer Responsibilities

It is important to understand that the existence of this document alone does not automatically constitute authority to install the aircraft engine/propeller/article.

Where the user/installer performs work in accordance with the national regulations of an airworthiness authority different than the airworthiness authority of the country specified in Block 1, it is essential that the user/installer ensures that his/her airworthiness authority accepts aircraft engine(s)/propeller(s)/article(s) from the airworthiness authority of the country specified in Block 1.

Statements in Blocks 13a and 14a do not constitute installation certification. In all cases, aircraft maintenance records must contain an installation certification issued in accordance with the national regulations by the user/installer before the aircraft may be flown.

par _____ de la société ATIS

1. Approving Civil Aviation Authority/Country:	2.	3. Form Tracking Number:
FAA/United States	**AUTHORIZED RELEASE CERTIFICATE** FAA Form 8130–3, AIRWORTHINESS APPROVAL TAG	07232018-21

4. Organization Name and Address:	5. Work Order/Contract/Invoice Number:
KNISLEY WELDING INC. 3450 SWETZER ROAD, LOOMIS, CA, 95650, PQ1260NM	P93416

6. Item:	7. Description:	8. Part Number:	9. Quantity:	10. Serial Number:	11. Status/Work:
1	LH Rear Stack Assembly	K62231-00	1	264807	NEW

12. Remarks:

AIR WORTHINESS APPROVAL
This part is produced under PMA #PQ1260NM and is not a critical component.

13a. Certifies the items identified above were manufactured in conformity to:		14a. ☐ 14 CFR 43.9 Return to Service ☐ Other regulation specified in Block 12	
☑ Approved design data and are in a condition for safe operation. ☐ Non-approved design data specified in Block 12.		Certifies that unless otherwise specified in Block 12, the work identified in Block 11 and described in Block 12 was accomplished in accordance with Title 14, Code of Federal Regulations, part 43 and in respect to that work, the items are approved for return to service.	
13b. Authorized Signature:	13c. Approval/Authorization No.:	14b. Authorized Signature:	14c. Approval/Certificate No.:
	PQ1260NM		
13d. Name (Typed or Printed):	13e. Date (dd/mmm/yyyy):	14d. Name (Typed or Printed):	14e. Date (dd/mmm/yyyy):
KYLE KNISLEY	23/JUL/2018		

User/Installer Responsibilities

It is important to understand that the existence of this document alone does not automatically constitute authority to install the aircraft engine/propeller/article.

Where the user/installer performs work in accordance with the national regulations of an airworthiness authority different than the airworthiness authority of the country specified in Block 1, it is essential that the user/installer ensures that his/her airworthiness authority accepts aircraft engine(s)/propeller(s)/article(s) from the airworthiness authority of the country specified in Block 1.

Statements in Blocks 13a and 14a do not constitute installation certification. In all cases, aircraft maintenance records must contain an installation certification issued in accordance with the national regulations by the user/installer before the aircraft may be flown.

par de la société ATIS

1. Approving Civil Aviation Authority/Country:	2.	3. Form Tracking Number:
FAA/United States	**AUTHORIZED RELEASE CERTIFICATE** FAA Form 8130–3, AIRWORTHINESS APPROVAL TAG	08242018-56

4. Organization Name and Address:	5. Work Order/Contract/Invoice Number:
KNISLEY WELDING INC. 3450 SWETZER ROAD, LOOMIS, CA, 95650, PQ1260NM	P93836

6. Item:	7. Description:	8. Part Number:	9. Quantity:	10. Serial Number:	11. Status/Work:
1	LH Front Stack Assembly	K35300-00	1	266311	NEW

12. Remarks:

AIR WORTHINESS APPROVAL
This part is produced under PMA #PQ1260NM and is not a critical component.

13a. Certifies the items identified above were manufactured in conformity to:		14a. ☐ 14 CFR 43.9 Return to Service ☐ Other regulation specified in Block 12	
☑ Approved design data and are in a condition for safe operation. ☐ Non-approved design data specified in Block 12.		Certifies that unless otherwise specified in Block 12, the work identified in Block 11 and described in Block 12 was accomplished in accordance with Title 14, Code of Federal Regulations, part 43 and in respect to that work, the items are approved for return to service.	
13b. Authorized Signature:	13c. Approval/Authorization No.:	14b. Authorized Signature:	14c. Approval/Certificate No.:
	PQ1260NM		
13d. Name (Typed or Printed):	13e. Date (dd/mmm/yyyy):	14d. Name (Typed or Printed):	14e. Date (dd/mmm/yyyy):
KYLE KNISLEY	24/AUG/2018		

User/Installer Responsibilities

It is important to understand that the existence of this document alone does not automatically constitute authority to install the aircraft engine/propeller/article.

Where the user/installer performs work in accordance with the national regulations of an airworthiness authority different than the airworthiness authority of the country specified in Block 1, it is essential that the user/installer ensures that his/her airworthiness authority accepts aircraft engine(s)/propeller(s)/article(s) from the airworthiness authority of the country specified in Block 1.

Statements in Blocks 13a and 14a do not constitute installation certification. In all cases, aircraft maintenance records must contain an installation certification issued in accordance with the national regulations by the user/installer before the aircraft may be flown.

par _____ de la société ATIS

59 60

Parts EXchange

To: ATIS Zone Aviation Generale

Date: 9/25/18

Your Purchase Order: Q-2271

Our Invoice: 98861

Certificate of Inspection / Compliance

We hereby certify that the items shipped against our subject invoice are of current manufacture and comply with the specifications of the noted part numbers(s) and commodity descriptions.

We further certify that the items supplied have passed our inspection and conform to the contract specifications.

We also certify that the quantities noted on our invoice are the quantities actually shipped and that the packaging, packing, and marking instructions noted on your purchase order have been complied with.

Part Number:	Description:	Serial Number:	Work Order:	Quantity:
CS051-2PNE	Clamp	—	—	2

Authorized Signature

The Parts Exchange, Inc.

The Parts Exchange, Inc. 2062 Carolina Place Dr. Fort Mill, SC 29708 800 478-2257 803 548-2665 803 548-6360 fax

par _____ de la société ATIS

2655 Harrison Ave. SW
Canton, Ohio 44706-3047
Phone: 330-430-6190
Fax: 330-430-6199

CERTIFICATE OF CONFORMANCE

AVIALL AEROSPACE

I hereby certify that on **05/16/18** Airfasco Industries provided the supplies called for by Contract/ PO Number **45903470** in accordance with all applicable requirements for shipment. I further state/ that the process certifications are in conformance with the contract requirements, including specifications and/or drawings, physical item identification (part number) and the quantity shown on this or attached acceptance document. The part numbers certified below have been manufactured in the United States.

Quality Assurance Representative

WM. DENT

PART NUMBER	LOT#	QUANTITY	PART NUMBER	LOT #	QUANTITY
AN4-6A	27187	10000			

AVIALL - TRUE CERTIFIED COPY - 07/10/2018 - JEFLORES - 7364868309

Photocopie effectuée le 05/10/2018
au titre d'un délotissement de 1 pièce(s)
sur un total de 1000 pièces
par JR de la société ATIS

AIRFASCO.com

2655 Harrison Ave SW
Canton, OH 44706
Ph: 330-430-6190, Fax: 330-430-6199.

Packing Slip

Original

Invoice #: 154761
Invoice Date: 5/16/2018
Time: 11:55:34 AM
Page: 1

To:
AVIALL AEROSPACE TEXAS
PO BOX 619048
DFW AIRPORT
DALLAS, TX 75261-0000
USA
ATTN: REJOE JACOB
Ph: 972-586-1903 Fax: 972-586-7995

Ship To:
AVIALL AEROSPACE TEXAS
2750 REGENT BLVD.
DFW AIRPORT
DALLAS, TX 75261-0000

Cust. PO#: 45903470
Order Date: 5/15/2018
Prepared By:
Customer #: 15195
Buyer: REJOE JACOB
WO #:

Terms: NET 30
# of Items: 1
Sales Order: 127745
VAT #:
FOB:

Ship Via: FED EX MOTOR FRE
# of Boxes: 19
Ship Log #: 1
Cust VAT #:
AWB:

Ship Via Acc:
Weight: 609
Ship Order:
Ship Date: 5/16/2018
Shipment:

Item	Part Number/Description	Shipped	BackOrd	CD	List Price	Disc	Unit Price	UOM	Total Amt
1	AN4-6A BOLT, AN Loc/Whse: 4B2 Control #: 156365-1 L-27187 50 PC PER PACK	10000	0	NE				EA	

ITEM AN4-6A=28

BATCH 7364868309

BHORTON
05/25/18

C OF C ENCLOSED!
19 BOXES 609 LBS
INV# 154760-154763 ARE SHIPPING TOGETHER
PARTS MANUFACTURED IN THE USA
THANK YOU!!

Special Instructions:

Authorized Signature:

AVIALL - TRUE CERTIFIED COPY - 07/10/2018 - JEFLORES - 7364868309

1. Approving Civil Aviation Authority/Country: FAA/United States	2. **AUTHORIZED RELEASE CERTIFICATE** FAA Form 8130-3, AIRWORTHINESS APPROVAL TAG	3. Form Tracking Number: 7364771186 1000000039904728

4. Organization Name and Address:	5. Work Order/Contract/Invoice Number:
AVIALL SERVICES INC. 2750 REGENT BLVD DFW AIRPORT, TX 75261	CF678

6. Item:	7. Description:	8. Part Number:	9. Quantity:	10. Serial Number:	11. Status/Work:
1.	HOSE-AIR DUCT	63633-038	1	N/A	NEW

12. Remarks:

MQ
THE
0038

SHELF LIFE EXPIRATION DATE: 01 OCT 2037

THE PRODUCT(S)/ARTICLE(S) SHIPPED UNDER THIS APPROVAL WERE PRODUCED BY PIPER AIRCRAFT, INC.

ATIS OE
FR.145.566
DDU

13a. Certifies the items identified above were manufactured in conformity to:		14a. ☐ 14 CFR 43.9 Return to Service ☐ Other regulation specified in Block 12 Certifies that unless otherwise specified in Block 12, the work identified in Block 11 and described in Block 12 was accomplished in accordance with Title 14, Code of Federal Regulations, part 43 and in respect to that work, the items are approved for return to service.	
☒ Approved design data and are in a condition for safe operation. ☐ Non-approved design data specified in Block 12.			
13b. Authorized Signature:	13c. Approval/Authorization No.: DART-700136-SW	14b. Authorized Signature:	14c. Approval/Certificate No.:
13d. Name (Typed or Printed): J.R. Hofmann	13e. Date (dd/mmm/yyyy): 07 MAR 2018	14d. Name (Typed or Printed):	14e. Date (dd/mmm/yyyy):

User/Installer Responsibilities

It is important to understand that the existence of this document alone does not automatically constitute authority to install the aircraft engine/propeller/article. Where the user/installer performs work in accordance with the national regulations of an airworthiness authority different than the airworthiness authority of the country specified in Block 1, it is essential that the user/installer ensures that his/her airworthiness authority accepts aircraft engine(s)propeller(s)/ article(s) from the airworthiness authority of the country specified in the Block 1. Statements in Blocks 13a and 14a do not constitute installation certification. In all cases, aircraft maintenance records must contain an installation certification issued in accordance with the national regulations by the user/installer before the aircraft may be flown.

AVIALL - TRUE CERTIFIED COPY - 03/07/2018 - TSIEN - 7364/71186

2-29

1. Approving Civil Aviation Authority/Country: FAA/UNITED STATES	2. **AUTHORIZED RELEASE CERTIFICATE** FAA Form 8130-3, AIRWORTHINESS APPROVAL TAG	3. Form Tracking Number: ST0916361
4. Organization Name and Address: Piper Aircraft, Inc. 2926 Piper Drive Vero Beach, FL 32960 USA	PC 206	5. Work Order / Contract / Invoice Number: ST0916361 / 210008000 / SH0121940 Page 1 of 1

6. Item:	7. Description:	8. Part Number:	9. Quantity:	10. Serial Number:	11. Status/Work:
10	HOSE AIR DUCT	63633-038	2	N/A	NEW

12. Remarks: Airworthiness Approval

Expires after 09:30:37

13a. Certifies the items identified above were manufactured in conformity to:

[X] Approved design data and are in condition for safe operation.

[ ] Non-approved design data specified in Block 12.

14a. [ ] 14 CFR 43.9 Return to Service/ [ ] Other regulation specified in Block 12

Certifies that unless otherwise specified in Block 12, the work identified in Block 11 and described in Block 12 was accomplished in accordance with Title 14, Code of/ Federal Regulations, part 43 and in respect to that work, the items are approved for return to service.

13b. Authorized Signature:	13c. Approval/Authorization No: PC206	14b. Authorized Signature:	14c. Approval/Certificate No.:
13d. Name (Typed or Printed): Wilson, James	13e. Date (dd/mmm/yyyy): 16/Jan/2018	14d. Name (Typed or Printed):	14e. Date (dd/mmm/yyyy):

User/Installer Responsibilities

It is important to understand that the existence of this document alone does not automatically constitute authority to install the aircraft engine/propeller/article.

Where the user/installer performs work in accordance with the national regulations of an airworthiness authority different than the airworthiness authority of the country specified in Block 1, it is essential that the user/installer ensures that his/her airworthiness authority accepts aircraft engine(s)/propeller(s)/article(s) from the airworthiness authority of the country specified in Block 1.

Statements in Blocks 13a and 14a do not constitute installation certification. In all cases, aircraft maintenance records must contain an installation certification issued in accordance with the national regulations by the user/installer before the aircraft may be flown.

62-3

Piper

Packing Slip SH0121940 Original
Date 01-26-2018

Sales Order ST0916361
Page 68

210008000 AVIALL CENTRAL WAREHOUSE
2750 REGENT BLVD. DFW AIRPORT, Dallas, TX, 75261, USA

AVIALL CENTRAL WAREHOUSE
2750 REGENT BLVD. DFW AIRPORT
Dallas TX 75261
UNITED STATES OF AMERICA

Customer Order No.	Date	Ship Via	Ship Date	Point of Origin
0045742903	01-26-2018	Fedex Ground	01-26-2018	Vero Beach, FL 32960 USA

Aircraft S/N :

Line	Order	Item	Order Qty	Unit	Description	Qty Shipped	Backorder	Pl.Rec.Dt.
1107	ST0916361	63633-038	2.00	ea	HOSE-AIR DUCT	2.00		12-21-2017

HarmC 4009.42.0050 SchB 4009.42.0050 ECCN 9A991.d Shelf Life 20 Years Country USA

S/L 9-2037

Shipment Reference : SH0121940 1/26/2018
SHIP FEDEX GRD BILL ACCT 0752-6857-2
FOR FEDEX GRD UNDER 150 LBS PER PACKAGE
AND TOTAL SHIPMENT 400 LBS OR LESS
ALL OTHER PLEASE REFER TO AVIALL
SHIPPING INSTRUCTIONS DATED 05/07/09

ITEM 63633-038=PI
BATCH 7364771186

BHORTON
02/05/18

Material heron has been made in conformance with all Federal wage and hour laws. The parts listed on this document, were produced and/or supplied under FAA Production Certificate 206.
Merchandise shipped according to order cannot be returned without our permission. All claims for damages should be made direct to transportation agency.
Piper Parts Limited Warranty: http://www.piper.com/warranty/

NOTE:
REMIT PAYMENT TO:
Piper Aircraft, Inc.
2926 Piper Drive
Vero Beach, FL 32960-1964

Form No. 012-341 Rev.07/2014

AVIALL - TRUE CERTIFIED COPY - 03/07/2018 - TSIEN - 7364771186

1. Approving Civil Aviation Authority/Country: FAA/United States	2. **AUTHORIZED RELEASE CERTIFICATE** FAA Form 8130-3, AIRWORTHINESS APPROVAL TAG	3. Form Tracking Number: 7364817694 1000000043894060

4. Organization Name and Address:	5. Work Order/Contract/Invoice Number:
AVIALL SERVICES INC. 2750 REGENT BLVD DFW AIRPORT, TX 75261	1562

6. Item:	7. Description:	8. Part Number:	9. Quantity:	10. Serial Number:	11. Status/Work:
1.	CLAMP	554-859	2	N/A	NEW

12. Remarks:

MQ
LOR
1739

THE PRODUCT(S)/ARTICLE(S) SHIPPED UNDER THIS APPROVAL WERE PRODUCED BY PIPER AIRCRAFT, INC.

SHELF LIFE EXPIRATION DATE: JAN 2037

ATIS OE
FR.145.566
DDU

13a. Certifies the items identified above were manufactured in conformity to:		14a. ☐ 14 CFR 43.9 Return to Service ☐ Other regulation specified in Block 12 Certifies that unless otherwise specified in Block 12, the work identified in Block 11 and described in Block 12 was accomplished in accordance with Title 14, Code of Federal Regulations, part 43 and in respect to that work, the items are approved for return to service.	
☒ Approved design data and are in a condition for safe operation. ☐ Non-approved design data specified in Block 12.			
13b. Authorized Signature:	13c. Approval/Authorization No.: 278953503	14b. Authorized Signature:	14c. Approval/Certificate No.:
13d. Name (Typed or Printed): Harry Gammons	13e. Date (dd/mmm/yyyy): 09 JUL 2018	14d. Name (Typed or Printed):	14e. Date (dd/mmm/yyyy):

User/Installer Responsibilities

It is important to understand that the existence of this document alone does not automatically constitute authority to install the aircraft engine/propeller/article. Where the user/installer performs work in accordance with the national regulations of an airworthiness authority different than the airworthiness authority of the country specified in Block 1, it is essential that the user/installer ensures that his/her airworthiness authority accepts aircraft engine(s)propeller(s)/ article(s) from the airworthiness authority of the country specified in the Block 1. Statements in Blocks 13a and 14a do not constitute installation certification. In all cases, aircraft maintenance records must contain an installation certification issued in accordance with the national regulations by the user/installer before the aircraft may be flown.

1. Approving Civil Aviation Authority/Country:	2.	3. Form Tracking Number:
FAA/UNITED STATES	**AUTHORIZED RELEASE CERTIFICATE** **FAA Form 8130-3, AIRWORTHINESS APPROVAL TAG**	ST0922193
4. Organization Name and Address: Piper Aircraft, Inc. 2926 Piper Drive Vero Beach, FL 32960 USA	**PC 206**	5. Work Order / Contract / Invoice Number: ST0922193 / 210008000 / SH0126822 Page 1 of 1

6. Item:	7. Description:	8. Part Number:	9. Quantity:	10. Serial Number:	11. Status/Work:
10	CLAMP	554-859	20	N/A	NEW

12. Remarks: Airworthiness Approval

Expires after 1/2037

13a. Certifies the items identified above were manufactured in conformity to:

[X] Approved design data and are in condition for safe operation.

[ ] Non-approved design data specified in Block 12.

14a. [ ] 14 CFR 43.9 Return to Service/ [ ] Other regulation specified in Block 12

Certifies that unless otherwise specified in Block 12, the work identified in Block and described in Block 12 was accomplished in accordance with Title 14, Code of/ Federal Regulations, part 43 and in respect to that work, the items are approved for return to service.

13b. Authorized Signature:	13c. Approval/Authorization No:	14b. Authorized Signature:	14c. Approval/Certificate No.:
James Wilson	PC206		
13d. Name (Typed or Printed):	**13e. Date (dd/mmm/yyyy):**	**14d. Name (Typed or Printed):**	**14e. Date (dd/mmm/yyyy):**
Wilson, James	13/Mar/2018		

User/Installer Responsibilities

It is important to understand that the existence of this document alone does not automatically constitute authority to install the aircraft engine/propeller/article.

Where the user/installer performs work in accordance with the national regulations of an airworthiness authority different than the airworthiness authority of the country specified in Block 1, it is essential that the user/installer ensures that his/her airworthiness authority accepts aircraft engine(s)/propeller(s)/article(s) from the airworthiness authority of the country specified in Block 1.

Statements in Blocks 13a and 14a do not constitute installation certification. In all cases, aircraft maintenance records must contain an installation certification issued in accordance with the national regulations by the user/installer before the aircraft may be flown.

AVIALL - TRUE CERTIFIED COPY 07/09/2018 - TSCOTT - 7364817694

63_3

Piper

Packing Slip SH0126822 Original
Date 03-16-2018

Sales Order ST0922193
Page 120

210008000 AVIALL CENTRAL WAREHOUSE
2750 REGENT BLVD. DFW AIRPORT, Dallas, TX, 75261, USA

AVIALL CENTRAL WAREHOUSE
2750 REGENT BLVD. DFW AIRPORT
Dallas TX 75261
UNITED STATES OF AMERICA

Customer Order No.	Date	Ship Via	Ship Date	Point of Origin
0045836821	03-08-2018	Fedex Ground	03-08-2018	Vero Beach, FL 32960 USA

Aircraft S/N :

Line	Order	Item	Order Qty	Unit	Description	Qty Shipped	Backorder	Pl.Rec.Dt.
63	ST0922193	554-859	20.00	ea	CLAMP	20.00		03-09-2018

HarmC 7326.90.8688 SchB 7326.90.8595 ECCN 9A991.d Shelf Life 20 Years Country USA
S/L 1-2037

Shipment Reference : SH0126822 3/16/2018
SHIP FEDEX GRD BILL ACCT 0752-6857-2
FOR FEDEX GRD UNDER 150 LBS PER PACKAGE
AND TOTAL SHIPMENT 400 LBS OR LESS
ALL OTHER PLEASE REFER TO AVIALL
SHIPPING INSTRUCTIONS DATED 05/07/09

ITEM 554-859=PI
BATCH 7364817694

NANUARIO
03/28/18

Material heron has been made in conformance with all Federal wage and hour laws. The parts listed on this document, were produced and/or supplied under FAA Production Certificate 206. Merchandise shipped according to order cannot be returned without our permission. All claims for damages should be made direct to transportation agency.
Piper Parts Limited Warranty: http://www.piper.com/warranty/

Form No. 012-341 Rev.07/2014

NOTE:
REMIT PAYMENT TO:
Piper Aircraft, Inc.
2926 Piper Drive
Vero Beach, FL 32960-1964

AVIALL - TRUE CERTIFIED COPY - 07/09/2018 - LSCOTT - 7364817694

64

Original

East Coast Aviation Supplies, Inc.
CERTIFICATE OF CONFORMITY

ATIS OE FR.145.566 DDU

No: 518828

ORIGINAL

Bill To:

ATIS
ACCTS. PAYABLE
ZONE AVIATION GENERALE-AEROPORT
LE LAMENTIN, FRENCH 97232

Ship To:

ATIS
ATTN: RECEIVING
ZONE AVIATION GENERALE-AEROPORT
LE LAMENTIN, FRENCH 97232

Customer PO	Ship Date	Airway Bill Number
472	3/24/2015	6244 7804 7857

Part No.	Description	Cond	Qty	S/L
MS17826-5 MFR: GREER LOT: 50321516	CASTLE NUT ECCN#: 9A991 SCHB#: 7318.16.0030	NE	10	28
MS21042L3 MFR: AFC LOT: 22944	SELF LOCKING NUT ECCN#: 9A991 SCHB#: 7318.16.0030	NE	100	92
MS21042L4 MFR: AFC LOT: 15644	SELF LOCKING NUT ECCN#: 9A991 SCHB#: 7318.16.0030	NE	50	45
MS21042L5 MFR: ESNA LOT: 43965-000	SELF LOCKING NUT ECCN#: 9A991 SCHB#: 7318.16.0030	NE	50	45
MS21042L6 MFR: ESNA LOT: 43664-000	SELF LOCKING NUT ECCN#: 9A991 SCHB#: 7318.16.0030	NE	25	39
MS24694S50 MFR: AFC LOT: 16710	STRUCTURAL SCREW ECCN#: 9A991 SCHB#: 7318.15.4000	NE	100	35
MS27039-1-11 MFR: LFC LOT: 51293	STRUCTURAL SCREW ECCN#: 9A991 SCHB#: 7318.15.4000	NE	100	29

P/N IPC: MS17826-5

P/N fournisseur:

N° Doc. lib.: COC 518828

S/N: lot 50321516

Désignation: Nut

Rayon:

Aéronef:

Péremption: _____

BON ETAT

BR 666 du 30/03/2015

ATIS OE FR.145.56 Ed2 R0 Nov0

CONDITIONS: NE - New NS - New Surplus OH-Overhauled RP-Repaired SV-Serviceable

We hereby certify that the items that are a part of this Purchase Order have been visually & dimensionally found to conform to all applicable standards, drawings & specifications. The liability of ECAS is limited to replacement of any item which is rejected because of a defect in material or workmanship if notified within 30 days & liability shall not exceed the invoice value. Such replacement shall constitute satisfaction of all liability.

Signed: _____

For and on behalf of EAST COAST AVIATION SUPPLIES, INC.

Inspectors Stamp **Insp. #2**

Photocopie effectuée le 08/10/2018
au titre d'un délotissement de 1 pièce(s)
sur un total de 10 pièces
par _____ de la société ATIS

65

ANILLO *Industries, Inc.*
2090 NORTH GLASSELL STREET, ORANGE, CA 92865-3391 USA
PLEASE REMIT TO
P.O. BOX 5586 ORANGE, CA 92863-5586 USA
(714)637-7000 (562)924-6632 FAX(714) 637-3022 CAGE CODE: 10639

AS9100 NADCAP CP ISO 9001 CERTIFIED

624322

Packing List & Certification

WE ACCEPT
VISA/MASTER/DISCOVER/AMEX

SOLD TO	3174	SHIP TO	A
ECAS,LLC dba MONROE AEROSPACE 399 EAST DRIVE ATTN:ACCTS PAYA MELBOURNE, FL 32904		ECAS, LLC dba MONROE AEROSPACE 399 EAST DRIVE MELBOURNE,FL 32904	

DATE ORDER REC'D	ORDER NUMBER	INVOICE DATE	SHIPPED VIA	TERMS
09/08/2016	FL77445		UPSGRND/3165E0	1% 10 DAYS, NET 30

ITEM	ORDERED	SHIPPED	DESCRIPTION	NET WEIGHT
1	100,000	100,000	AN960-516 REV 21 /LOT#SA6173 /QCR:1,4,6,8,15,30, NAS1149F0563P ECCN: 9A991 Schedule B#: 7318.22.0000 COO: USNLR	
2	5,000	2,100	AN960KD6L REV 2 /LOT#Y9580 /QCR:1,4,6,8,15,30, NAS1149DN616K ECCN: 9A991 Schedule B#: 7616.10.8000 COO: USNLR	

We certify that: 1. item number 1,2 above is manufactured in accordance with the material and processing specifications of this order.
2. We certify that the material on this order conforms in all respects to the current applicable government and/or manufacturer's specification. Test reports are on file and are available for examination on all Anillo manufactured parts. All claims for errors or shortages must be made within 10 days after receipt of goods. No good to be returned without written authorization. All claims for defective material must filed within 30 days of shipment to receive consideration. We do not assume financial responsibility or liability from the use of products sold, other than the replacement value of the products sold, if claimed within the specified time limit above.

<< R.M.A.# REQUIRED FOR RETURNS >>

<< TO THE BEST OF OUR KNOWLEDGE, PARTS ARE MERCURY FREE >>

Certification

STAMP Anillo 22 DATE SEP 08 2016

DFAR DOES NOT APPLY

Photocopie effectuée le 08/10/2018
au titre d'un délotissement de 1 pièce(s)
sur un total de 100 000 pièces
par _____ de la société ATIS

BY Ben Omidwar
Ben Omidwar, Quality Assurance Manager

FI 4.03.05

MONROE AEROSPACE

CERTIFICATE OF CONFORMITY

NO: 585056

BILL TO:	SHIP TO:
ATIS ACCTS. PAYABLE ZONE AVIATION GENERALE-AEROPORT LE LAMENTIN, MARTINOQUE 97232	ATIS ATTN: RECIEVING ZONE AVIATION GENERALE-AEROPORT LE LAMENTIN, MARTINOQUE 97232

CUSTOMER PO	SHIP DATE	AIRWAY BILL/TRACKING #
CF598		665765272406

PART NO:	Description	CND	QTY	S/L		
AN919-3D	REDUCER	NE	8	30	LOT: 8142	MFR: INLAND MACHINE
AN960-8	Customer Reference: WASHER	NE	200	45	LOT: Y4658	MFR: ANILLO
NAS1149F0363P	Customer Reference: WASHER	NE	200	1	LOT: SA4633	MFR: ANILLO
AN960-516	Customer Reference: WASHER	NE	200	57	LOT: SA6173	MFR: ANILLO
MS24694S95	Customer Reference: STRUCTURAL SCREW	NE	100	17	LOT: 52803	MFR: LFC
44PN REV: N/A	Customer Reference: CLEAR TUBING	NE	150	30	LOT: 11203312	MFR: FLOWLINE
261N04	Customer Reference: NYLON NUT/SLEEVE	NE	10	46	LOT: 10964379	MFR: GHX
262N04	Customer Reference: NYLON UNION	NE	5	30	LOT: 10964379	MFR: GHX
265N04	Customer Reference: NYLON UNION/ELBOW	NE	4	21	LOT: 10964379	MFR: GHX
CR3213-4-02	Customer Reference: CHERRY RIVET	NE	200	342	LOT: 88052451	MFR: CHERRY
CR3213-4-03	Customer Reference: CHERRY RIVET	NE	200	209	LOT: 86089214	MFR: CHERRY
	Customer Reference:					

CONDITIONS: NE - New OH-OVERHAULED RP-REPAIRED SV-SERVICEABLE

We hereby certify that the items that are a part of this Purchase Order have been visually & dimensionally found to conform to all applicable standards, drawings & specifications. The liability of ECAS, LLC is limited to replacement of any item which is rejected because of a defect in material or workmanship if notified within 30 days & liability shall not exceed the invoice value. Such replacement shall constitute satisfaction of all liability.

SIGNED:

For and on behalf of ECAS, LLC dba MONROE AEROSPACE

ECAS, LLC dba MONROE AEROSPACE
399 EAST DRIVE MELBOURNE, FL 32904 PH: 800.330.3975