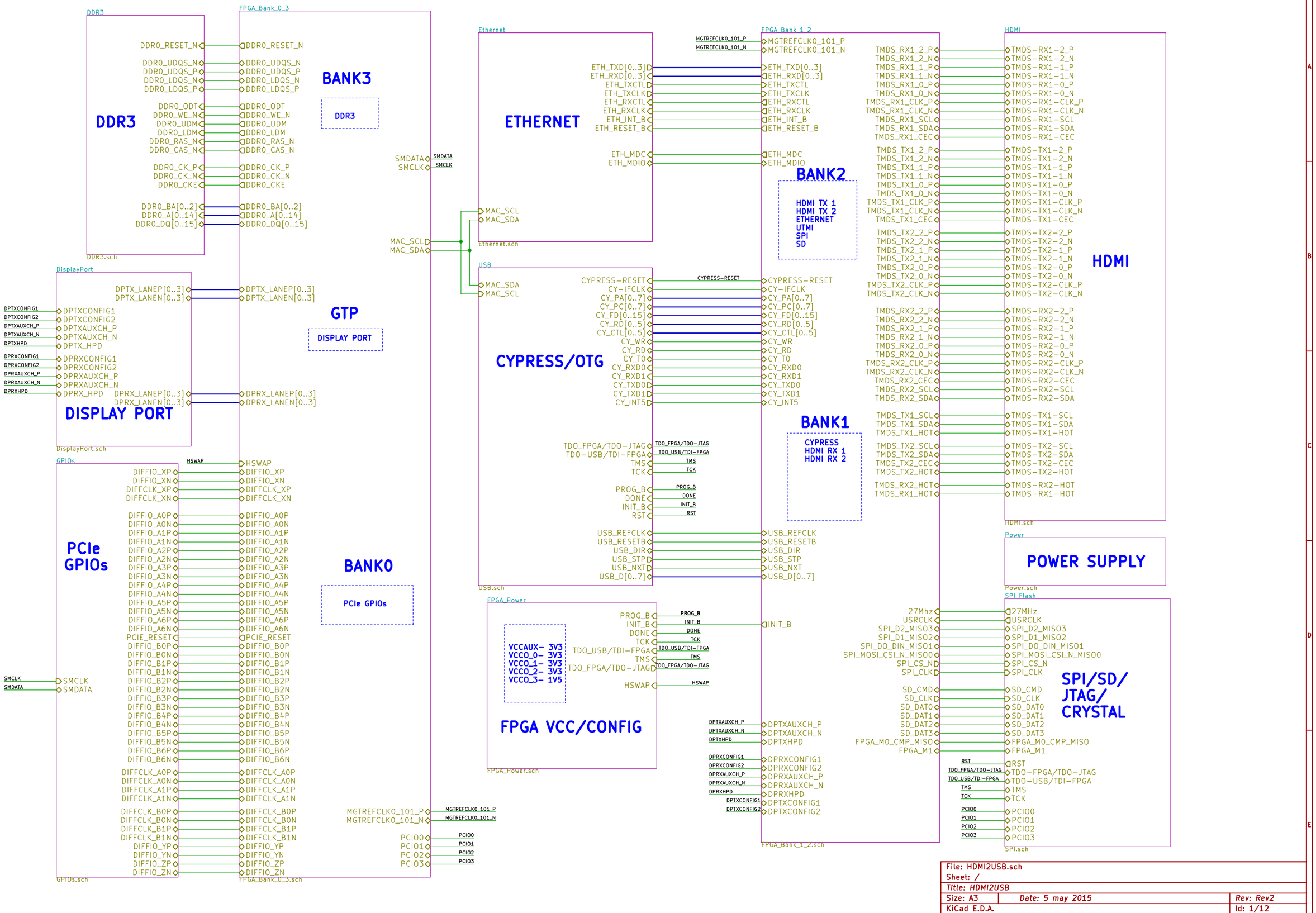

File: HDMI2USB.sch	
Sheet: /	
Title: HDMI2USB	
Size: A3	Date: 5 may 2015
KiCad E.D.A.	Id: 1/12

Conference Model

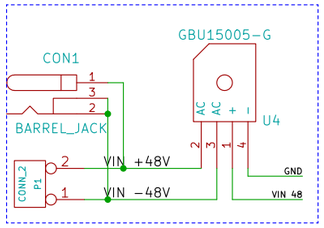

Consumer Model

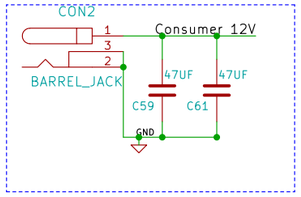

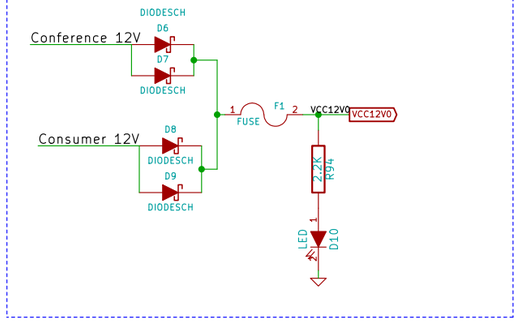

VCC3V3

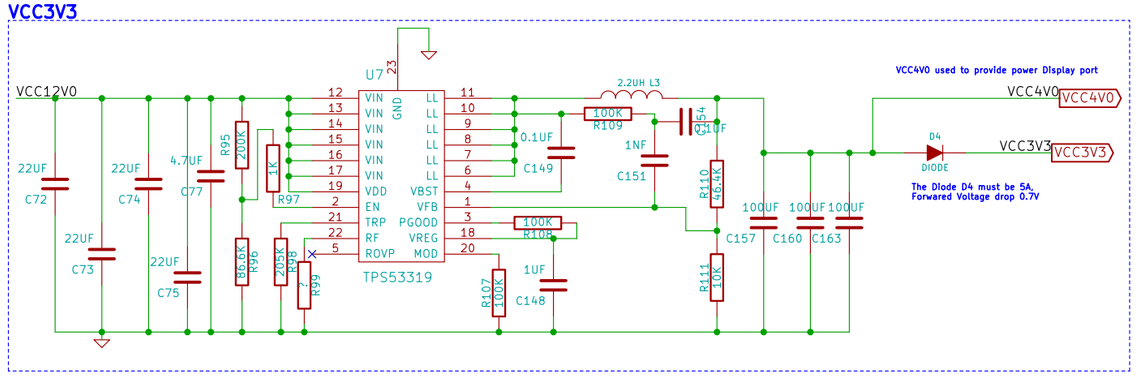

Conference Model

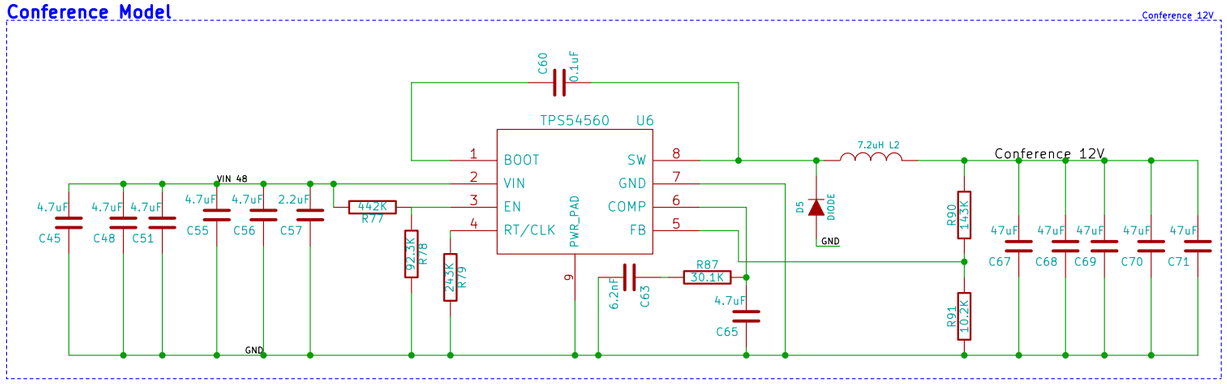

VCC1V5

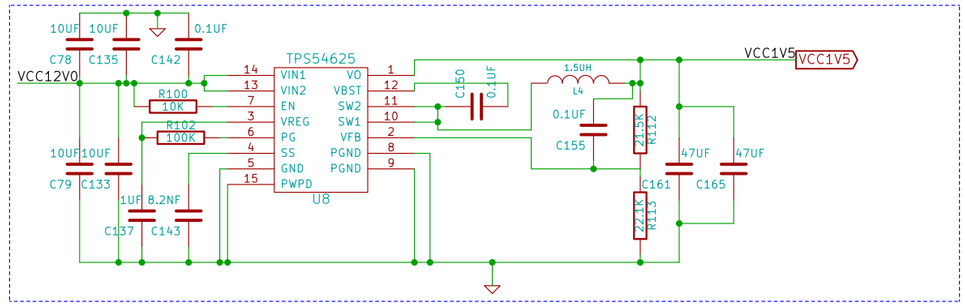

VCC1V2

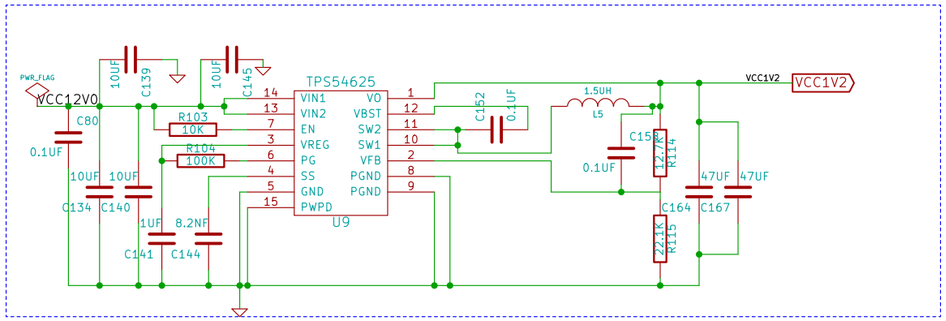

VCC0V75

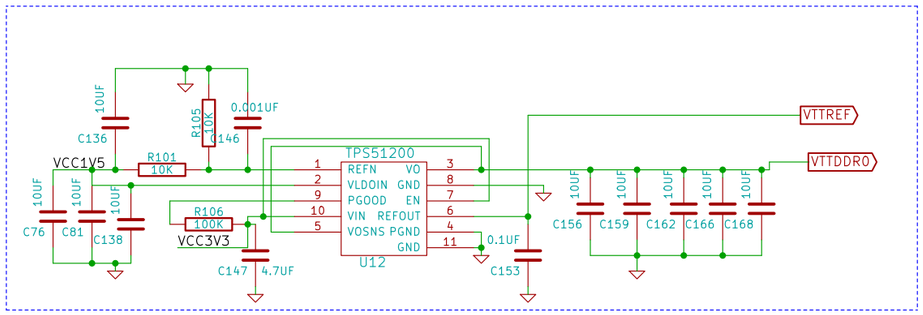

File: Power.sch		
Sheet: /Power/		
Title: HDMI2USB		
Size: A3	Date: 5 may 2015	Rev: Rev2
KiCad E.D.A.		Id: 2/12

U10F

TCK A21 — TCK
TDI E18 — TDO_USB/TDI-FPGA
TMS D20 — TMS
TDO G17 — TDO_FPGA/TDO-JTAG

*VFS U17 — VFS
*RFUSE P15 — RFS
*VBATT T16 — VBATT
SUSPEND AA22 — SUSPEND
CMPCS_B_2 V18
DONE_2 AB21 — DONE
PROGRAM_B_2 AB2 — PROGB

VCCO_0 B19, B4, E17, F6, G10, G14 — VCC3V3

VCCO_1 C21, E19, G21, J18, L16, L21, N18, R21, U18, W21 — VCC3V3

VCCO_2 AA11, AA15, AA19, AA7, AB3, T13, T9, V12, V16, V8, W5 — VCC3V3 (VCC3V3)

VCCO_3 C2, F4, G2, J5, L2, L7, N5, R2, U5, W2 — VCC1V5 (VCC1V5)

XC6SLX45T

XC6SLX45T

VCC1V2 (VCC1V2) — VCCINT: R14, P9, P13, P11, N14, N12, N10, M9, M13, M11, L14, L12, L10, K9, K13, K11, J8, J14, J12, J10

VCC3V3 — VCCAUX: V6, U11, R6, R12, R10, N8, M15, L8, K15, H9, H15, G12, F11

GND: W7, W19, W16, V4, V14, V10, U7, U21, U2, R5, R18, P14, P12, P10, N9, N21, N2, N17, N13, N11, M14, M12, M10, L9, L5, L18, L13, L11, K14, K12, K10, J9, J21, J2, J15, J13, J11, H7, G5, G18, F13, E7, E21, E2, E15, E14, E11, D6, D16, D10, C8, C6, C16, C14, C12, B7, B5, B17, B15, B11, AB22, AB1, AA9, AA5, AA17, AA13, A9, A22, A13, A11, A1

U10E

VCC3V3 — R52 4.7K — INIT_B

HSWAP — HSWAP — R53 R — GND

RFS — R57 4.7K — VCC3V3

SUSPEND — 4.7K R29 — GND

DONE — LED D1 — R55 1K — VCC3V3

PROGB — R56 4.7K — VCC3V3

PROG_B

GND — C242 0.1UF — R58 4.7K — VFS

VBATT — R59 4.7K — GND — C243 0.1UF

VCC3V3

VCC1V5 — C82 C84 C86 C88 C92 C94 C96 C98 C102 C127 (0.1UF) — C83 C85 C87 C89 C91 C93 C95 C97 C99 C101 C103 C105 C107 C109 C111 C117 C119 C190 C115 C123 C125 C120 C213 C108 C110 C112 C114 C116 C118 (0.1UF)

VCC1V2 — C90 C121 C122 C124 C126 C128 C129 C130 C131 C215 C221 C236 C237 (0.1UF)

VCC3V3

File: FPGA_Power.sch	
Sheet: /FPGA_Power/	
Title: HDMI2USB	
Size: A2	Date: 5 may 2015 — Rev: Rev2
KiCad E.D.A.	Id: 3/12

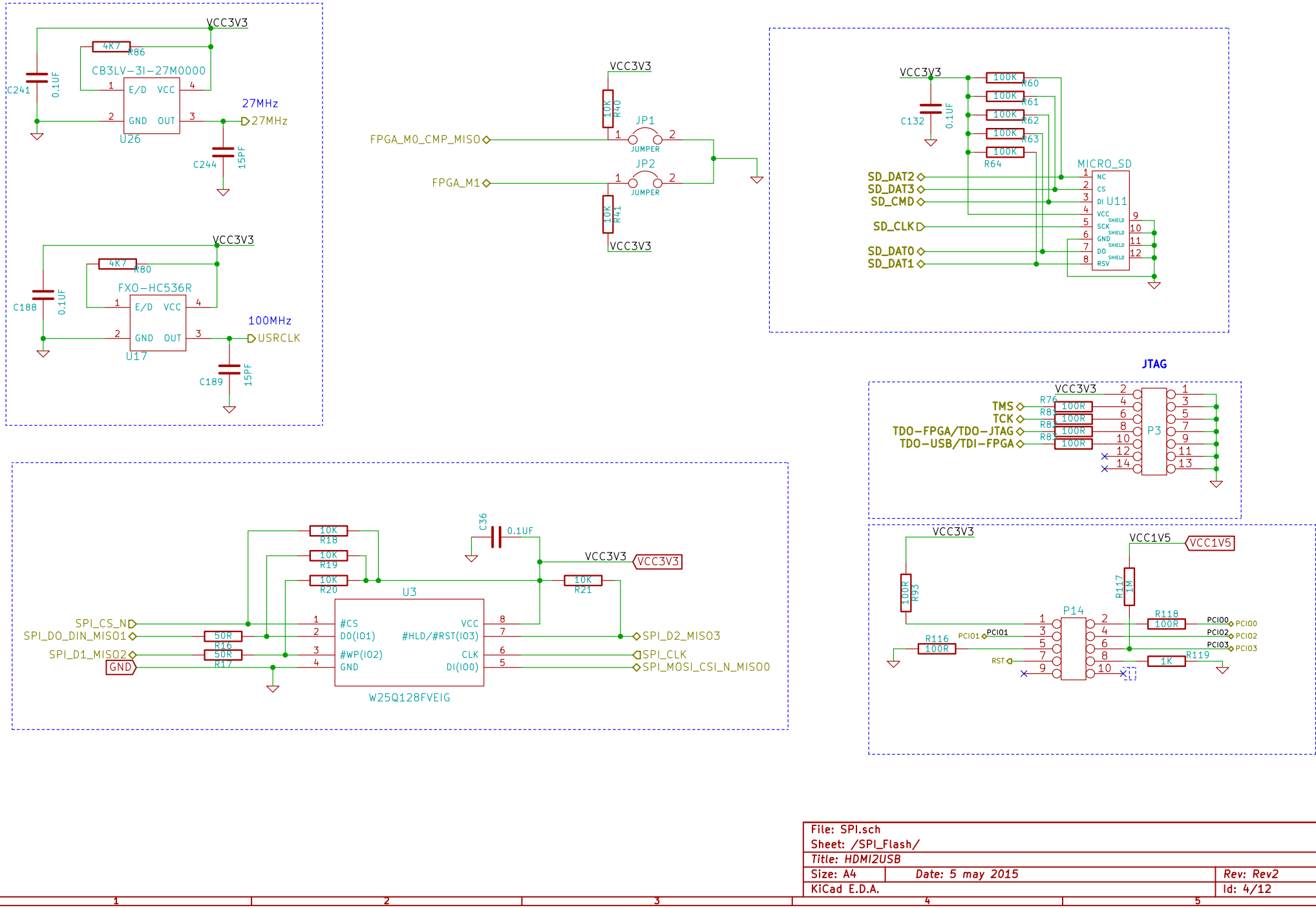

File: SPI.sch		
Sheet: /SPI_Flash/		
Title: HDMI2USB		
Size: A4	Date: 5 may 2015	Rev: Rev2
KiCad E.D.A.		Id: 4/12

DDR3

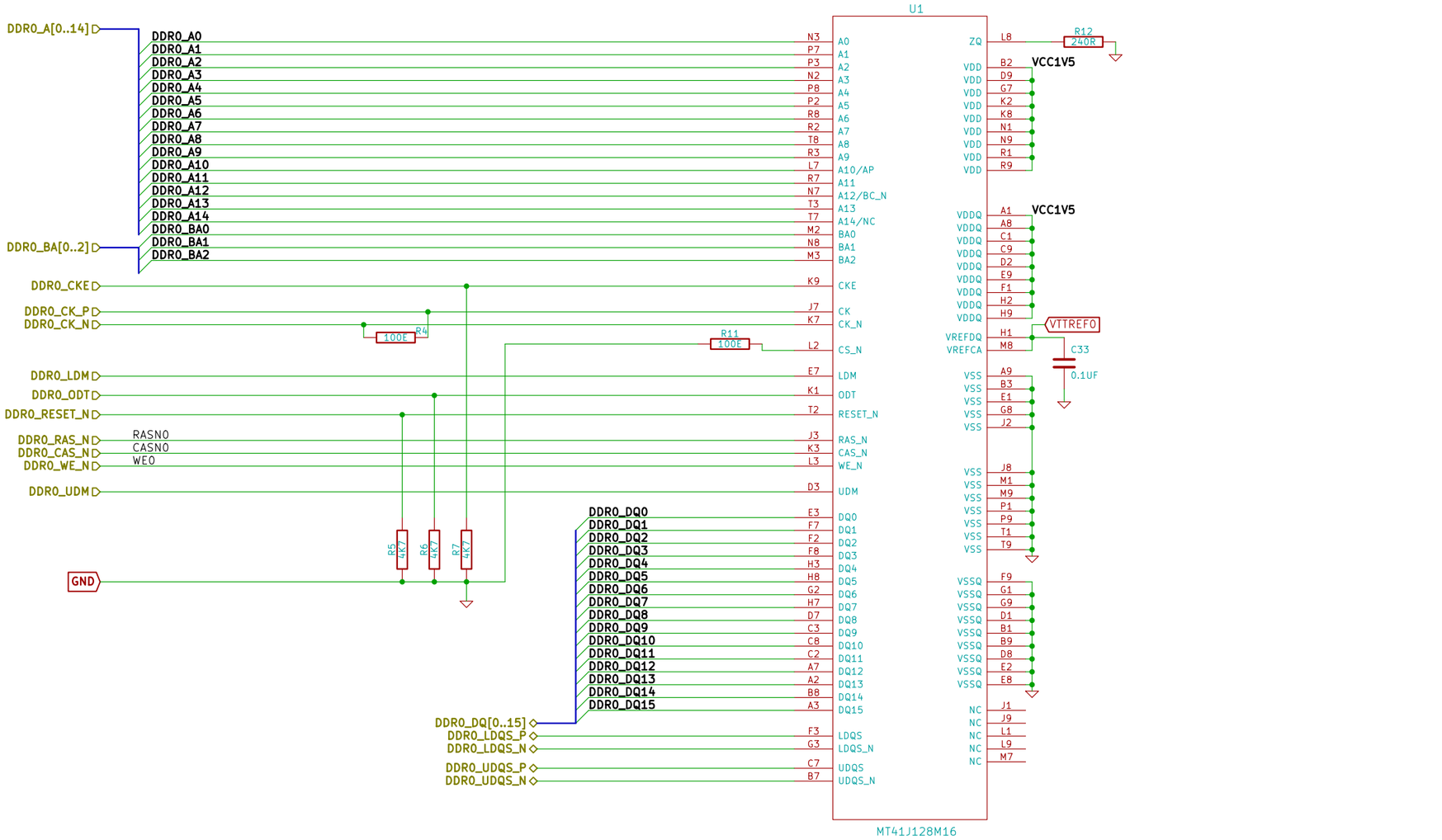

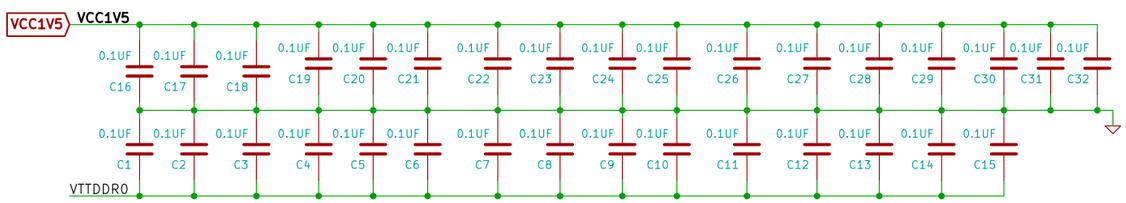

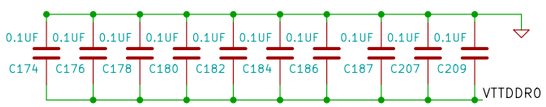

File: DDR3.sch		
Sheet: /DDR3/		
Title: HDMI2USB		
Size: A3	Date: 5 may 2015	Rev: Rev2
KiCad E.D.A.		Id: 5/12

DISPLAY PORT TX

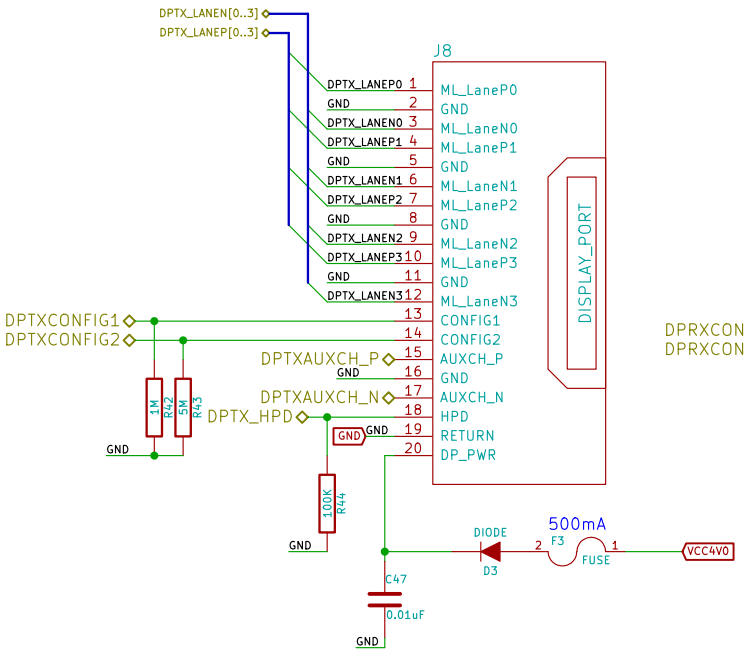

DISPLAY PORT RX

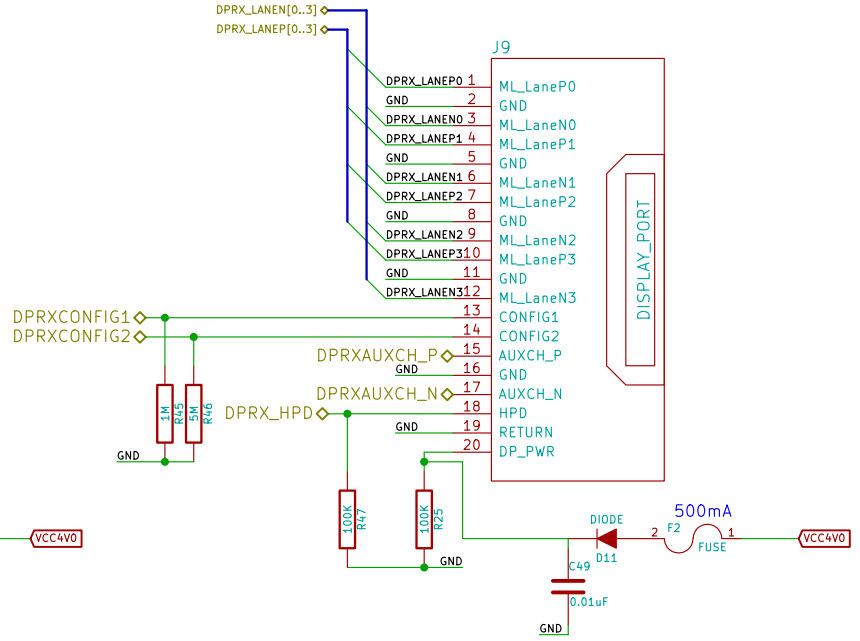

File: DisplayPort.sch		
Sheet: /DisplayPort/		
Title: HDMI2USB		
Size: A4	Date: 5 may 2015	Rev: Rev2
KiCad E.D.A.		Id: 6/12

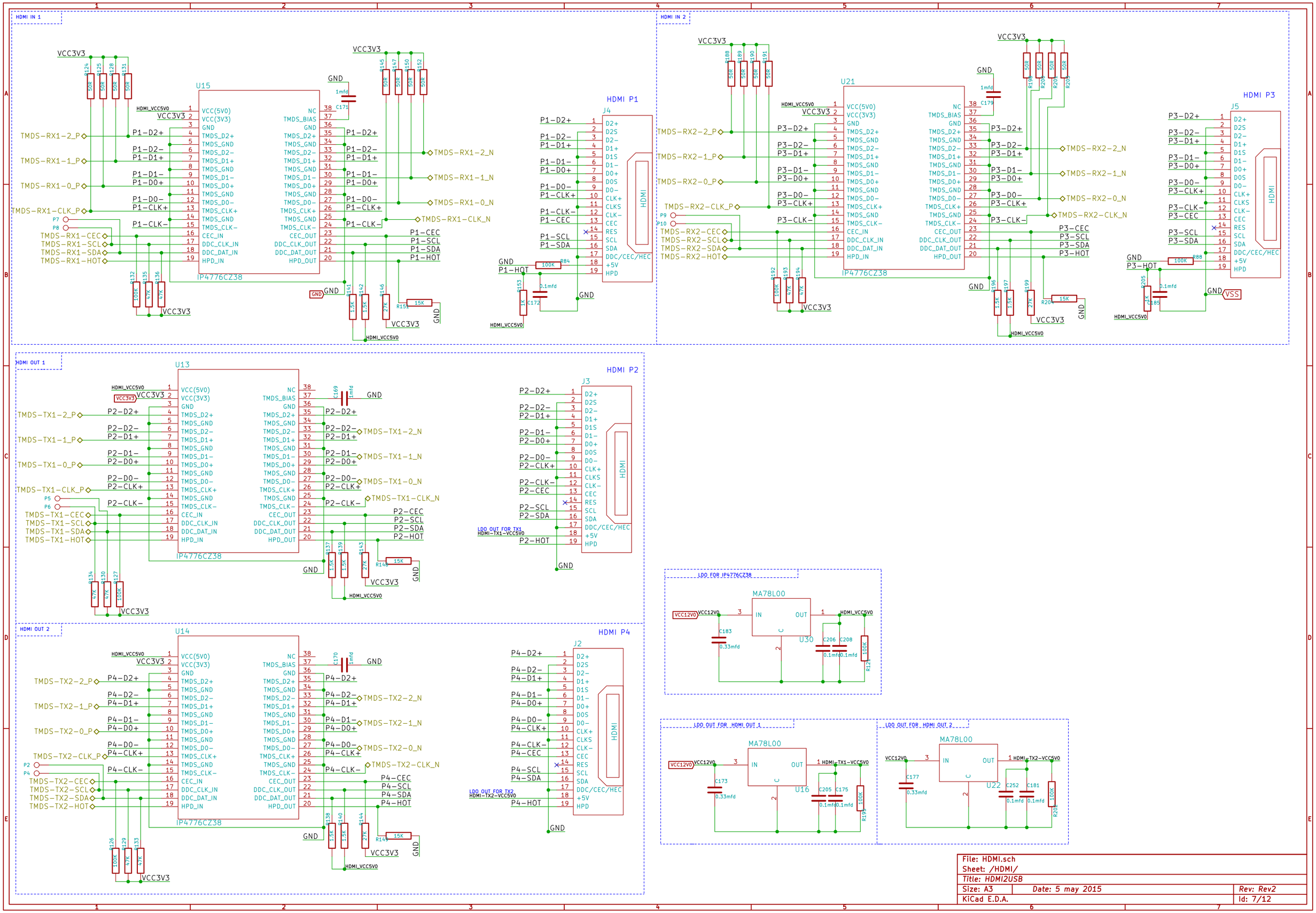

File: HDMI.sch		
Sheet: /HDMI/		
Title: HDMI2USB		
Size: A3	Date: 5 may 2015	Rev: Rev2
KiCad E.D.A.		Id: 7/12

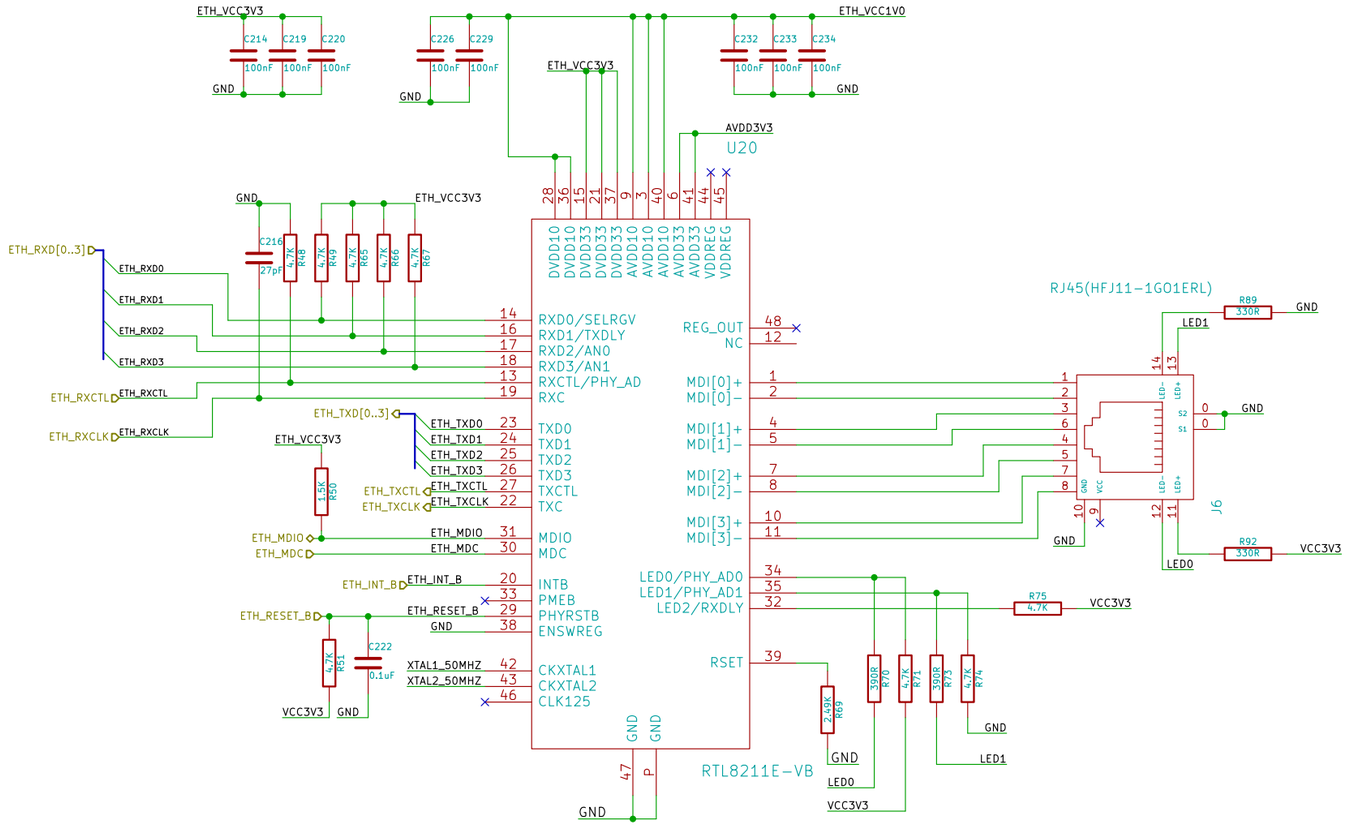

VCC1V0

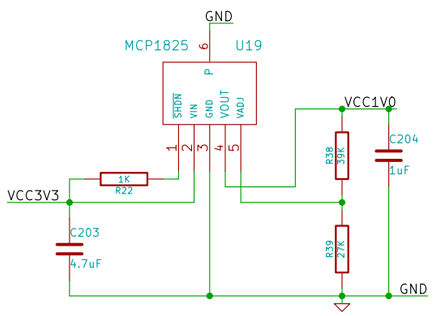

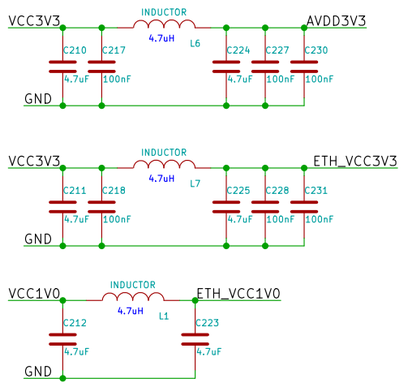

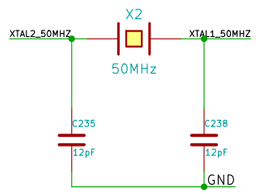

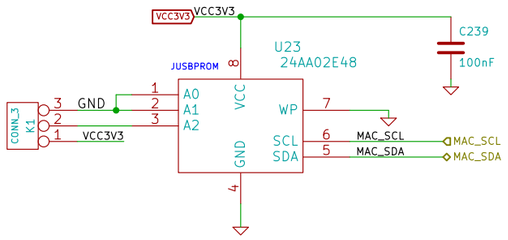

License: CC BY-SA
http://www.numato.com
Numato Lab

File: Ethernet.sch
Sheet: /Ethernet/
Title: HDMI2USB

Size: A3	Date: 5 may 2015	Rev: Rev2
KiCad E.D.A.		Id: 8/12

PCIe

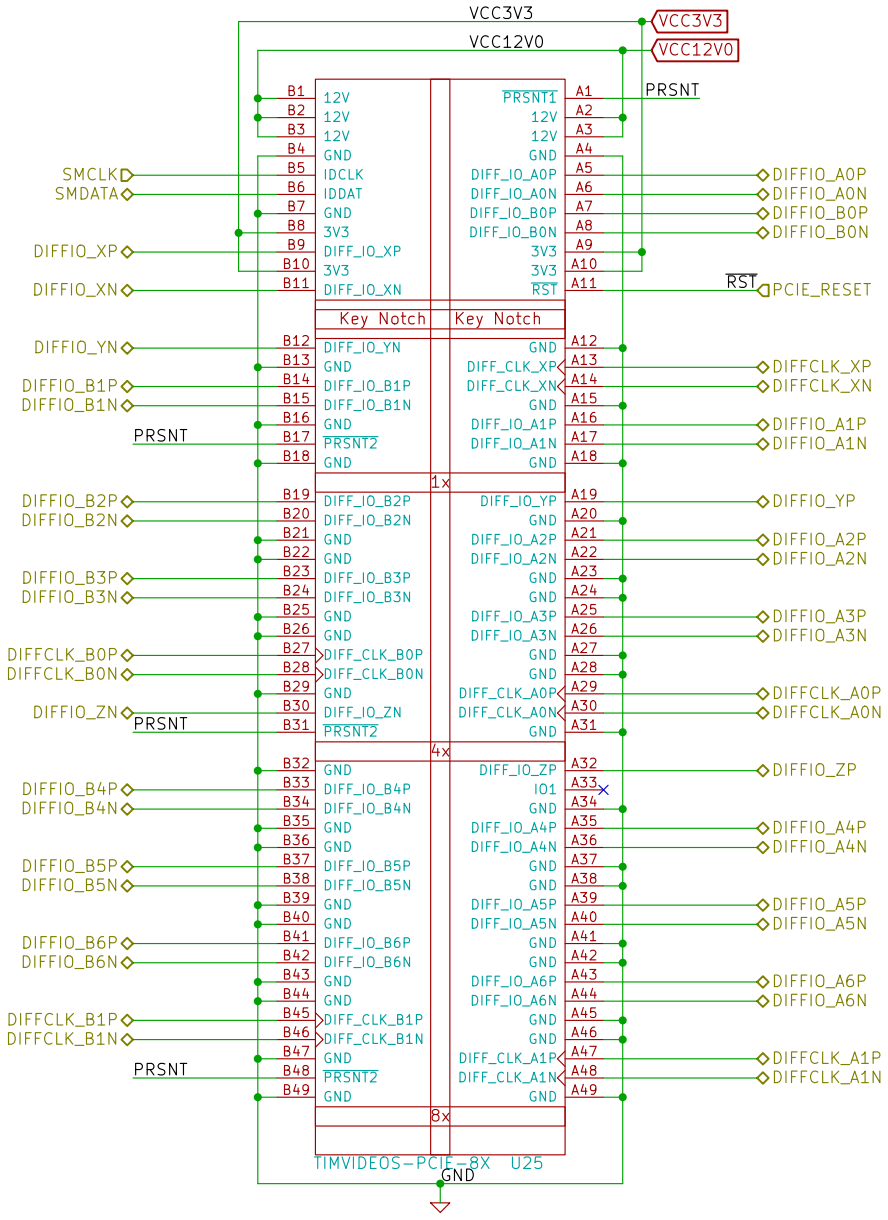

File: GPIOs.sch		
Sheet: /GPIOs/		
Title: HDMI2USB		
Size: A4	Date: 5 may 2015	Rev: Rev2
KiCad E.D.A.		Id: 9/12

USB 2.0 Device Port
JTAG Programmer and "Easy" High Speed USB 2.0 Interface
Cypress FX2 based

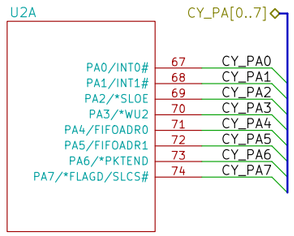

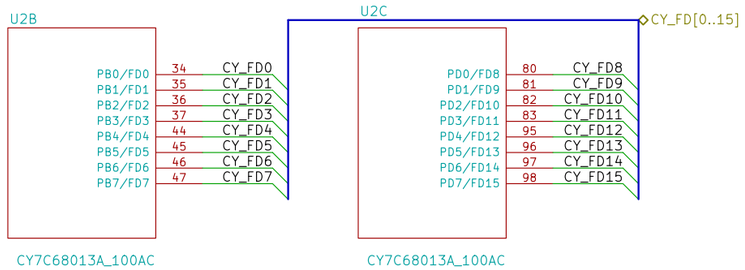

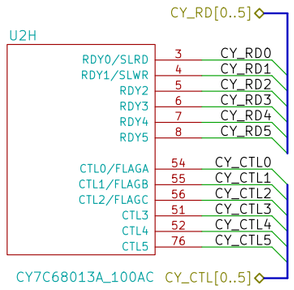

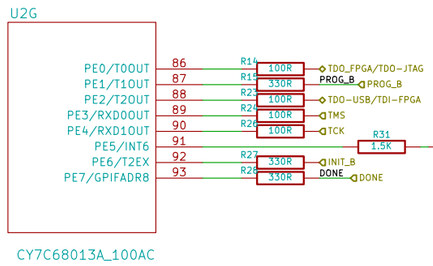

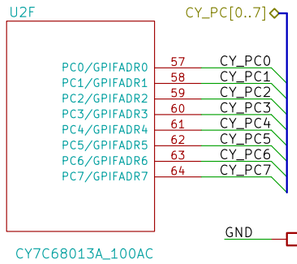

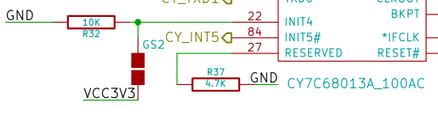

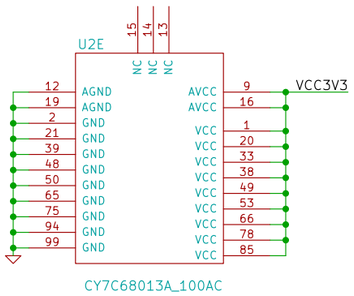

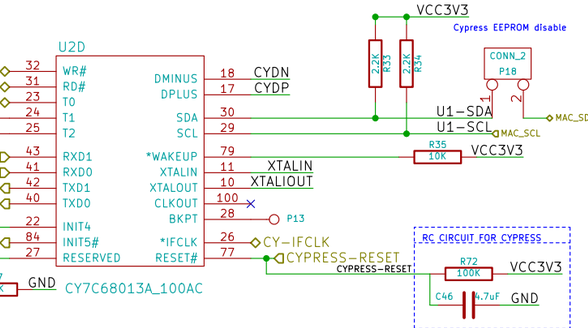

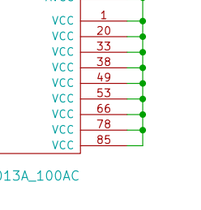

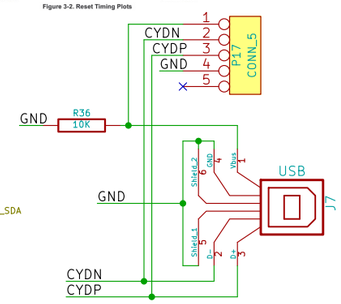

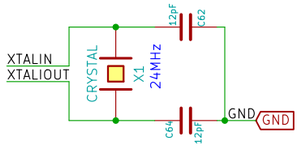

USB 2.0 OTG Port (Host + Device Support)
UTMI+/ULPI IC – Require full FPGA USB2.0 stack
Microchip USB3440
FOSS Cores:
 * Daisho – http://goo.gl/eSwTeb
 * joris_vr – http://jorisvr.nl/usb/

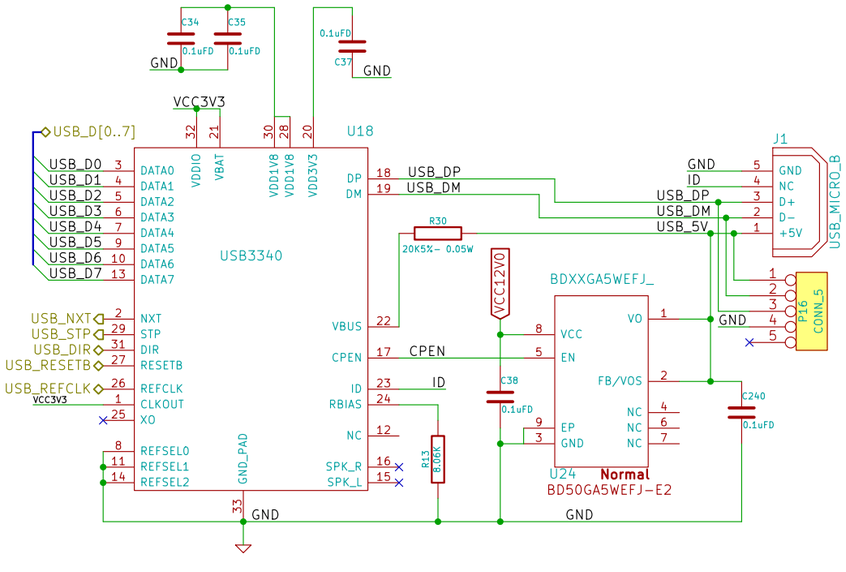

Cypress CY7C68013A
Decoupling Capacitors

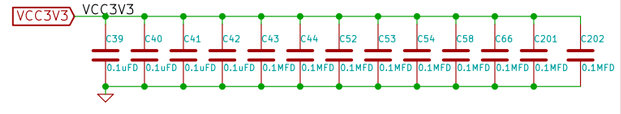

File: USB.sch		
Sheet: /USB/		
Title: HDMI2USB		
Size: A3	Date: 5 may 2015	Rev: Rev2
KiCad E.D.A.		Id: 10/12

BANK 2

U10C

IO_L1P_CCLK_2	Y20	SPI_CLK
IO_L1N_M0_CMPMISO_2	AA21	FPGA_M0_CMP_MISO
IO_L2P_CMPCLK_2	V17	USB_RESETB
IO_L2N_CMPMOSI_2	W18	USB_STP
IO_L3P_D0_DIN_MISO_MISO1_2	AA20	SPI_D0_DIN_MISO1
IO_L3N_MOSI_CSI_B_MISO0_2	AB20	SPI_MOSI_CSI_N_MISO0
*IO_L4P_2	U16	DPTXAUXCH_P
*IO_L4N_VREF_2	V15	DPTXAUXCH_N
*IO_L5P_2	W17	USB_D3
*IO_L5N_2	Y18	USB_D2
IO_L6P_2	AA14	USB_D4
IO_L6N_2	AB14	USB_D5
IO_L12P_D1_MISO2_2	R13	SPI_D1_MISO2
IO_L12N_D2_MISO3_2	T14	SPI_D2_MISO3
IO_L13P_M1_2	Y19	FPGA_M1
IO_L13N_D10_2	AB19	DPTXCONFIG2
IO_L14P_D11_2	AA18	TMDS_TX2_CEC
IO_L14N_D12_2	AB18	TMDS_TX2_HOT
IO_L15P_2	Y17	TMDS_TX2_SCL
IO_L15N_2	AB17	TMDS_TX2_SDA
IO_L16P_2	U14	TMDS_TX2_2_P
IO_L16N_VREF_2	U13	TMDS_TX2_2_N
*IO_L17P_2	Y16	USB_D6
*IO_L17N_2	W15	USB_D7
*IO_L18P_2	V13	USB_NXT
*IO_L18N_2	W13	USB_DIR
IO_L19P_2	AA16	TMDS_TX2_1_P
IO_L19N_2	AB16	TMDS_TX2_1_N
*IO_L20P_2	W14	USB_D1
*IO_L20N_2	Y14	USB_D0
IO_L21P_2	Y15	TMDS_TX2_0_P
IO_L21N_2	AB15	TMDS_TX2_0_N
*IO_L22P_2	R11	DPRXAUXCH_P
*IO_L22N_2	T11	DPRXAUXCH_N
*IO_L23P_2	T15	DPTXAUXCH_P
*IO_L23N_2	U15	DPTXAUXCH_N
IO_L29P_GCLK3_2	T12	TMDS_TX2_CLK_P
IO_L29N_GCLK2_2	U12	TMDS_TX2_CLK_N
IO_L30P_GCLK1_D13_2	Y13	USB_REFCLK
IO_L30N_GCLK0_USERCCLK_2	AB13	USRCLK
IO_L31P_GCLK31_D14_2	AA12	ETH_RXCLK
IO_L31N_GCLK30_D15_2	AB12	ETH_TXCLK
IO_L32P_GCLK29_2	Y11	TMDS_TX1_CLK_P
IO_L32N_GCLK28_2	AB11	TMDS_TX1_CLK_N
IO_L40P_2	W12	TMDS_TX1_0_P
IO_L40N_2	Y12	TMDS_TX1_0_N
IO_L41P_2	AA10	TMDS_TX1_1_P
IO_L41N_VREF_2	AB10	TMDS_TX1_1_N
*IO_L42P_2	V11	DPTXHPD
*IO_L42N_2	W11	DPRXHPD
IO_L43P_2	Y9	TMDS_TX1_2_P
IO_L43N_2	AB9	TMDS_TX1_2_N
*IO_L44P_2	W10	TMDS_TX1_CEC
*IO_L44N_2	Y10	TMDS_TX1_SDA
IO_L45P_2	AA8	DPRXCONFIG1
IO_L45N_2	AB8	DPRXCONFIG2
*IO_L46P_2	T10	DPRXAUXCH_P
*IO_L46N_2	U10	DPRXAUXCH_N
IO_L47P_2	Y7	TMDS_TX1_SCL
IO_L47N_2	AB7	TMDS_TX1_HOT
IO_L48P_D7_2	W9	ETH_TXD0
IO_L48N_RDWR_B_VREF_2	Y8	ETH_TXD1
IO_L49P_D3_2	AA6	ETH_TXD2
IO_L49N_D4_2	AB6	ETH_TXD3
*IO_L50P_2	U9	ETH_RXCTL
*IO_L50N_2	V9	ETH_INT_B
*IO_L57P_2	T8	ETH_MDIO
*IO_L57N_2	U8	ETH_RESET_B
*IO_L58P_2	V7	ETH_MDC
*IO_L58N_2	W8	ETH_RXCTL
*IO_L59P_2	R9	ETH_RXD0
*IO_L59N_2	R8	ETH_RXD1
*IO_L60P_2	W6	ETH_RXD2
*IO_L60N_2	Y6	ETH_RXD3
IO_L62P_D5_2	Y5	SD_DAT3
IO_L62N_D6_2	AB5	SD_DAT2
IO_L63P_2	AA4	SD_DAT0
IO_L63N_2	AB4	SD_DAT1
IO_L64P_D8_2	T7	SD_CLK
IO_L64N_D9_2	U6	SD_CMD
IO_L65P_INIT_B_2	Y4	INIT_B
IO_L65N_CSO_B_2	AA3	SPI_CS_N

ETH_TXD[0..3]

ETH_RXD[0..3]

USB_D[0..7]

XC6SLX45T

BANK 1

U10B

IO_L1P_A25_1	F18	CY_PA0
IO_L1N_A24_VREF_1	F19	CY_PA1
*IO_L9P_1	H16	CY_PA2
*IO_L9N_1	H17	CY_PA3
*IO_L10P_1	B21	CY_PA4
*IO_L10N_1	B22	CY_PA5
IO_L19P_1	J16	CY_PA6
IO_L19N_1	J17	CY_PA7
IO_L20P_1	C20	CY_FD0
IO_L20N_1	C22	CY_FD1
*IO_L21P_1	L15	CY_FD2
*IO_L21N_1	K16	CY_FD3
*IO_L28P_1	D21	CY_FD4
*IO_L28N_VREF_1	D22	CY_FD5
IO_L29P_A23_M1A13_1	G19	CY_FD6
IO_L29N_A22_M1A14_1	F20	CY_FD7
IO_L30P_A21_M1RESET_1	H18	CY_FD8
IO_L30N_A20_M1A11_1	H19	CY_FD9
IO_L31P_A19_M1CKE_1	F21	CY_FD10
IO_L31N_A18_M1A12_1	F22	CY_FD11
IO_L32P_A17_M1A8_1	E20	CY_FD12
IO_L32N_A16_M1A9_1	E22	CY_FD13
IO_L33P_A15_M1A10_1	J19	CY_FD14
IO_L33N_A14_M1A4_1	H20	CY_FD15
IO_L34P_A13_M1WE_1	K19	CY_RD
IO_L34N_A12_M1BA2_1	K18	CY_WR
IO_L35P_A11_M1A7_1	G20	CY_TO
IO_L35N_A10_M1A2_1	G22	CYPRESS-RESET
IO_L36P_A9_M1BA0_1	K17	TMDS_RX1_CEC
IO_L36N_A8_M1BA1_1	L17	TMDS_RX1_SCL
IO_L37P_A7_M1A0_1	H21	TMDS_RX1_1_P
IO_L37N_A6_M1A1_1	H22	TMDS_RX1_1_N
IO_L38P_A5_M1CLK_1	K20	TMDS_RX1_2_P
IO_L38N_A4_M1CLK_1	L19	TMDS_RX1_2_N
IO_L39P_M1A3_1	J20	TMDS_RX1_0_P
IO_L39N_M1ODT_1	J22	TMDS_RX1_0_N
IO_L40P_GCLK11_M1A5_1	M20	TMDS_RX1_CLK_P
IO_L40N_GCLK10_M1A6_1	M19	TMDS_RX1_CLK_N
IO_L41P_GCLK9_IRDY1_M1RASN_1	K21	MGTREFCLK0_101_P
IO_L41N_GCLK8_M1CASN_1	K22	MGTREFCLK0_101_N
IO_L42P_GCLK7_M1UDM_1	P20	CY-IFCLK
IO_L42N_GCLK6_TRDY1_M1UDM_1	N19	27MHz
IO_L43P_GCLK5_M1DQ4_1	L20	TMDS_RX2_CLK_P
IO_L43N_GCLK4_M1DQ5_1	L22	TMDS_RX2_CLK_N
IO_L44P_A3_M1DQ6_1	M21	TMDS_RX2_0_P
IO_L44N_A2_M1DQ7_1	M22	TMDS_RX2_0_N
IO_L45P_A1_M1LDQS_1	N20	TMDS_RX2_1_P
IO_L45N_A0_M1LDQSN_1	N22	TMDS_RX2_1_N
IO_L46P_FCS_B_M1DQ2_1	P21	TMDS_RX2_2_P
IO_L46N_FOE_B_M1DQ3_1	P22	TMDS_RX2_2_N
IO_L47P_FWE_B_M1DQ0_1	R20	TMDS_RX2_HOT
IO_L47N_LDC_M1DQ1_1	R22	TMDS_RX2_SDA
IO_L48P_HDC_M1DQ8_1	T21	TMDS_RX2_SCL
IO_L48N_M1DQ9_1	T22	TMDS_RX2_CEC
IO_L49P_M1DQ10_1	U20	CY_PC0
IO_L49N_M1DQ11_1	U22	CY_PC1
IO_L50P_M1UDQS_1	V21	CY_PC2
IO_L50N_M1UDQSN_1	V22	CY_PC3
IO_L51P_M1DQ12_1	W20	CY_PC4
IO_L51N_M1DQ13_1	W22	CY_PC5
IO_L52P_M1DQ14_1	Y21	CY_PC6
IO_L52N_M1DQ15_1	Y22	CY_PC7
IO_L53P_1	P19	CY_RD0
IO_L53N_VREF_1	R19	CY_RD1
*IO_L58P_1	M16	CY_RD2
*IO_L58N_1	N15	CY_RD3
IO_L59P_1	U19	CY_RD4
IO_L59N_1	T20	CY_RD5
IO_L60P_1	N16	CY_CTL0
IO_L60N_1	P16	CY_CTL1
IO_L61P_1	M17	CY_CTL4
IO_L61N_1	M18	CY_CTL3
*IO_L70P_1	R15	CY_CTL2
*IO_L70N_1	R16	CY_CTL5
*IO_L71P_1	P17	CY_RXD0
*IO_L71N_1	P18	CY_RXD1
*IO_L72P_1	R17	CY_TXD0
*IO_L72N_1	T17	CY_TXD1
*IO_L73P_1	T19	CY_INT5
*IO_L73N_1	T18	TMDS_RX1_SDA
IO_L74P_AWAKE_1	V19	TMDS_RX1_HOT
IO_L74N_DOUT_BUSY_1	V20	DPTXCONFIG1

CY_PA[0..7]

CY_FD[0..15]

CY_PC[0..7]

CY_RD[0..5]

CY_CTL[0..5]

XC6SLX45T

File: FPGA_Bank_1_2.sch		
Sheet: /FPGA_Bank_1_2/		
Title: HDMI2USB		
Size: A2	Date: 5 may 2015	Rev: Rev2
KiCad E.D.A.		Id: 11/12

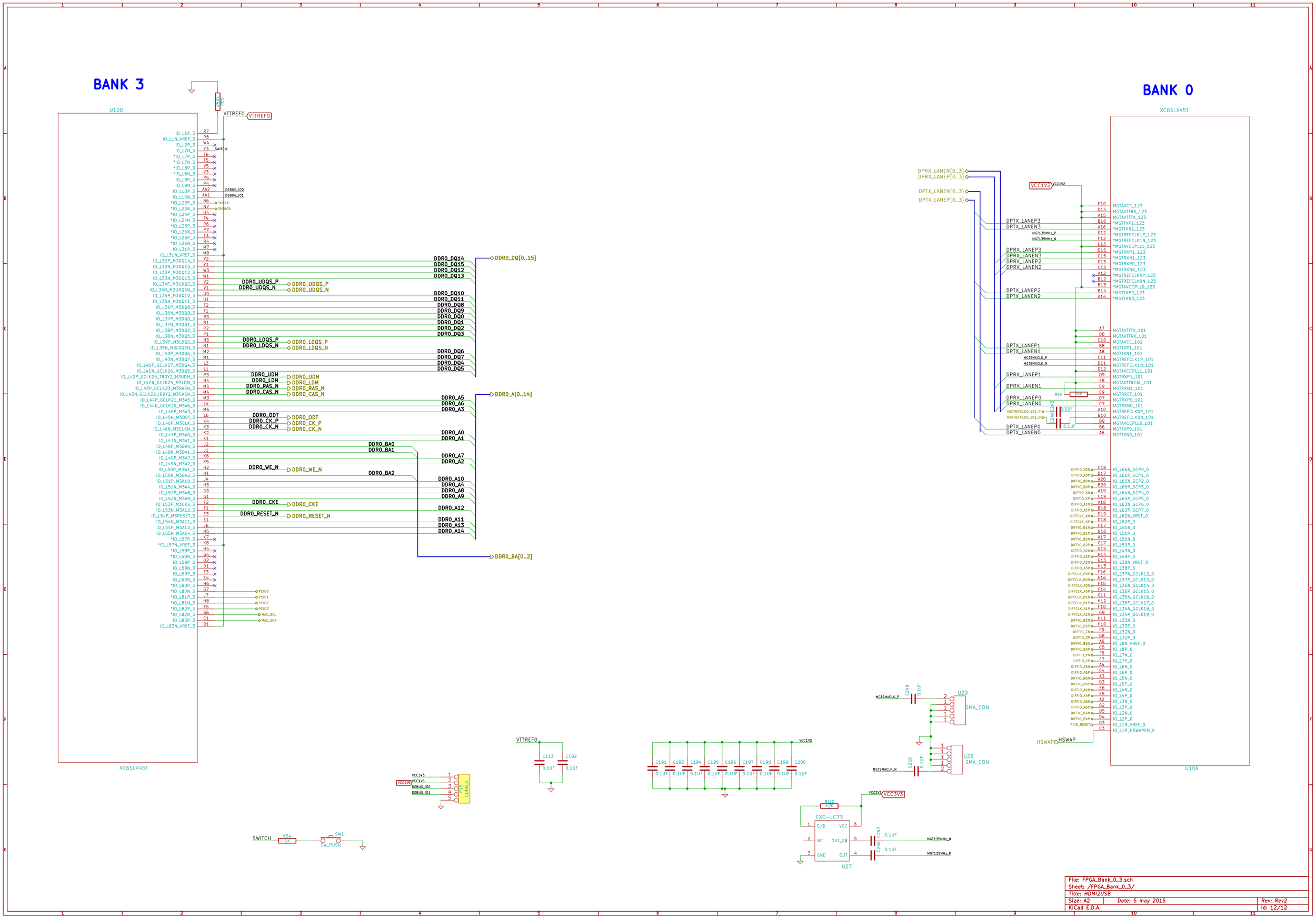
BANK 3
BANK 0
U10D
XC6SLX45T
U10A
VTTREF0
VCC1V2
VCC3V3
DDR0_DQ[0..15]
DDR0_A[0..14]
DDR0_BA[0..2]
DPRX_LANEN[0..3]
DPRX_LANEP[0..3]
DPTX_LANEN[0..3]
DPTX_LANEP[0..3]
HSWAP
SWITCH
FXO-LC73
U27
U28
U29
SMA_CON
SW_PUSH
File: FPGA_Bank_0_3.sch
Sheet: /FPGA_Bank_0_3/
Title: HDMI2USB
Size: A2
Date: 5 may 2015
Rev: Rev2
KiCad E.D.A.
Id: 12/12