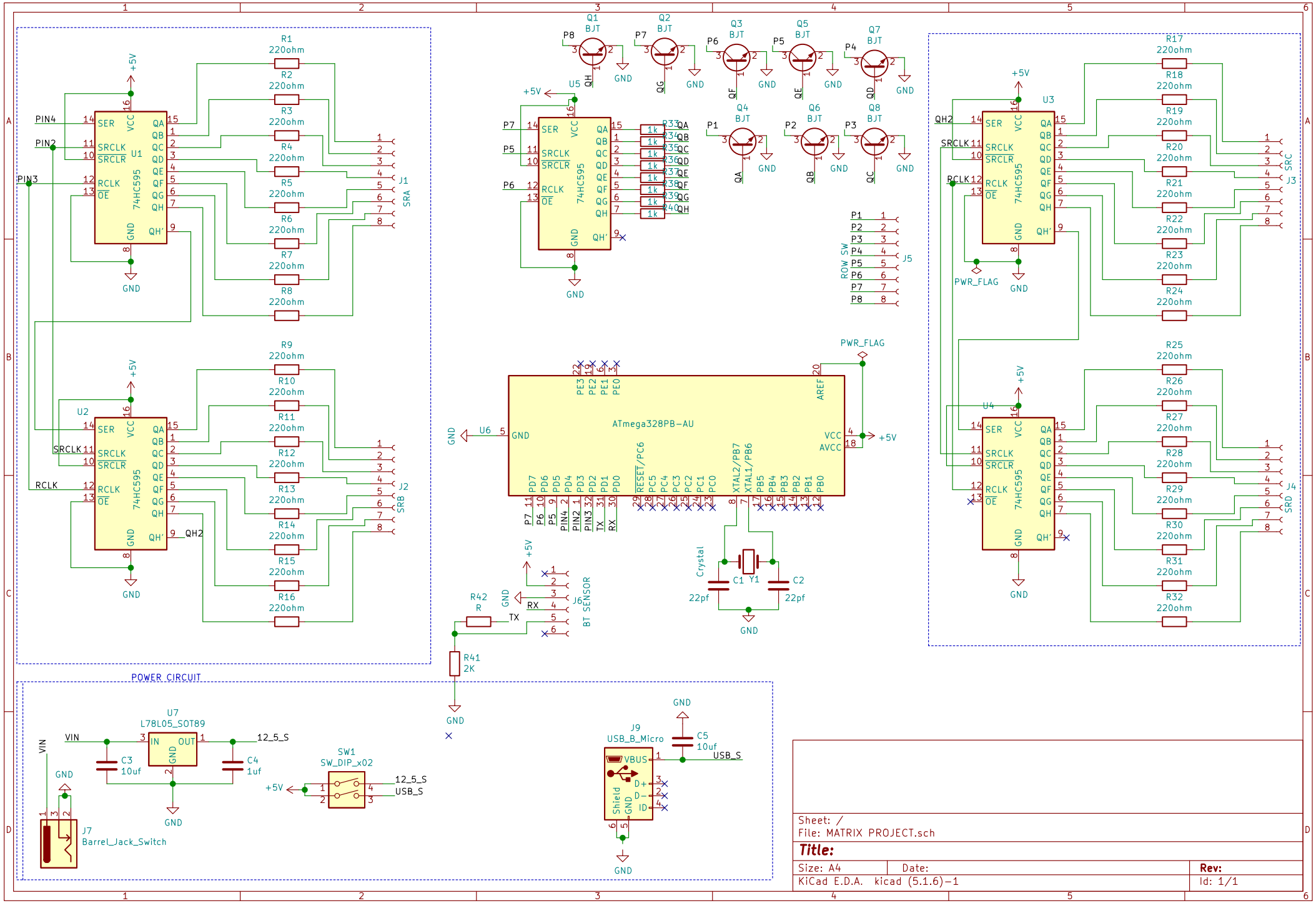
U1
74HC595
U2
74HC595
U3
74HC595
U4
74HC595
U5
74HC595
U6
ATmega328PB-AU
Q1 BJT
Q2 BJT
Q3 BJT
Q4 BJT
Q5 BJT
Q6 BJT
Q7 BJT
Q8 BJT
J1 SRA
J2 SRB
J3 SRC
J4 SRD
J5 ROW SW
J6 BT SENSOR
Crystal Y1
C1 22pf
C2 22pf
R41 2K
R42 R
PWR_FLAG
POWER CIRCUIT
U7 L78L05_SOT89
C3 10uf
C4 1uf
SW1 SW_DIP_x02
J9 USB_B_Micro
C5 10uf
J7 Barrel_Jack_Switch
VIN
12_5_S
USB_S
+5V
GND
Sheet: /
File: MATRIX PROJECT.sch
Title:
Size: A4
Date:
Rev:
KiCad E.D.A. kicad (5.1.6)-1
Id: 1/1