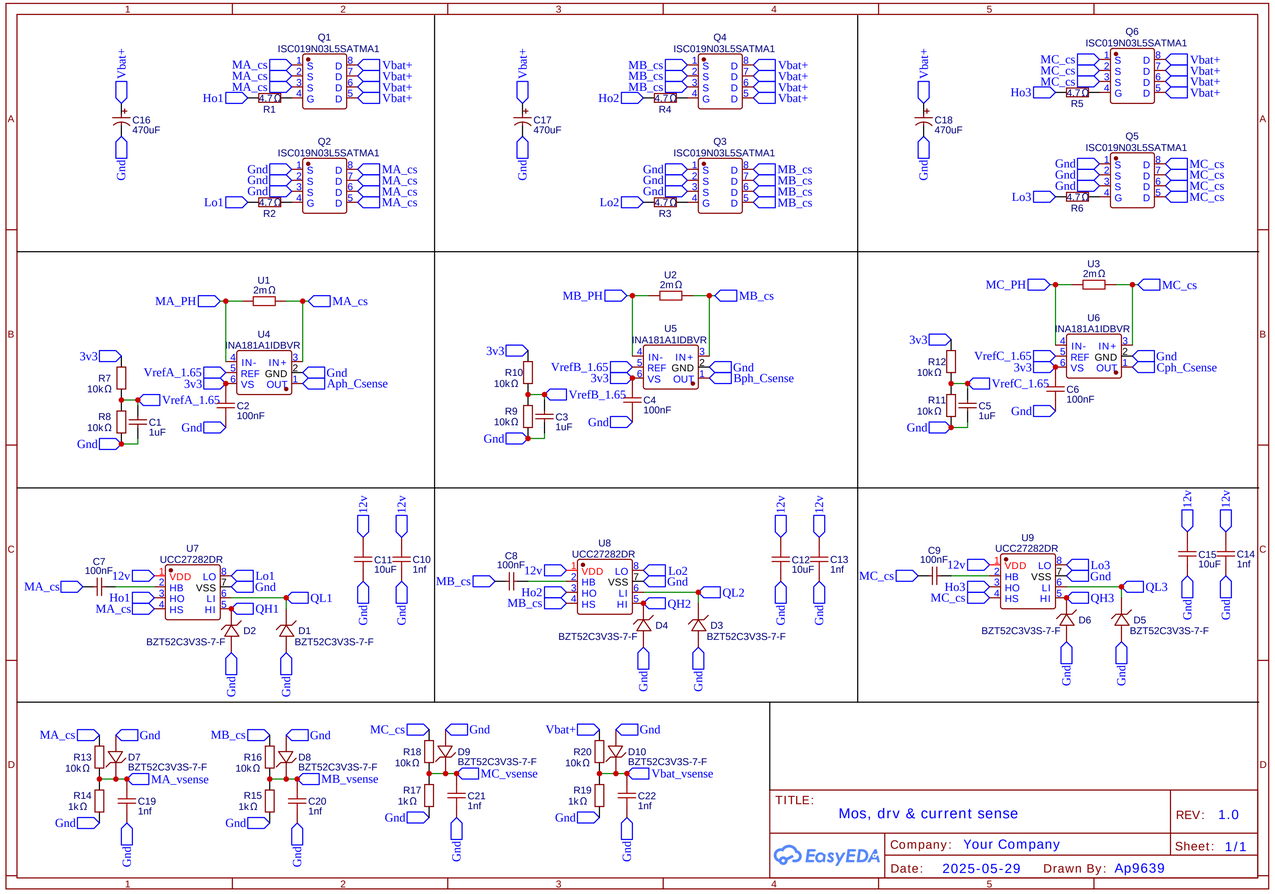
Q1
ISC019N03L5SATMA1
Q2
ISC019N03L5SATMA1
Q4
ISC019N03L5SATMA1
Q3
ISC019N03L5SATMA1
Q6
ISC019N03L5SATMA1
Q5
ISC019N03L5SATMA1
C16 470uF
C17 470uF
C18 470uF
R1 4.7Ω
R2 4.7Ω
R3 4.7Ω
R4 4.7Ω
R5 4.7Ω
R6 4.7Ω
U1 2mΩ
U2 2mΩ
U3 2mΩ
U4 NA181A1IDBVR
U5 NA181A1IDBVR
U6 NA181A1IDBVR
U7 UCC27282DR
U8 UCC27282DR
U9 UCC27282DR
D1 BZT52C3V3S-7-F
D2 BZT52C3V3S-7-F
D3 BZT52C3V3S-7-F
D4 BZT52C3V3S-7-F
D5 BZT52C3V3S-7-F
D6 BZT52C3V3S-7-F
D7 BZT52C3V3S-7-F
D8 BZT52C3V3S-7-F
D9 BZT52C3V3S-7-F
D10 BZT52C3V3S-7-F
MA_PH
MB_PH
MC_PH
MA_cs
MB_cs
MC_cs
Vbat+
Gnd
3v3
12v
Ho1
Lo1
Ho2
Lo2
Ho3
Lo3
QH1
QH2
QH3
QL1
QL2
QL3
MA_vsense
MB_vsense
MC_vsense
Vbat_vsense
TITLE:
Mos, drv & current sense
REV: 1.0
Company: Your Company
Sheet: 1/1
Date: 2025-05-29
Drawn By: Ap9639
EasyEDA

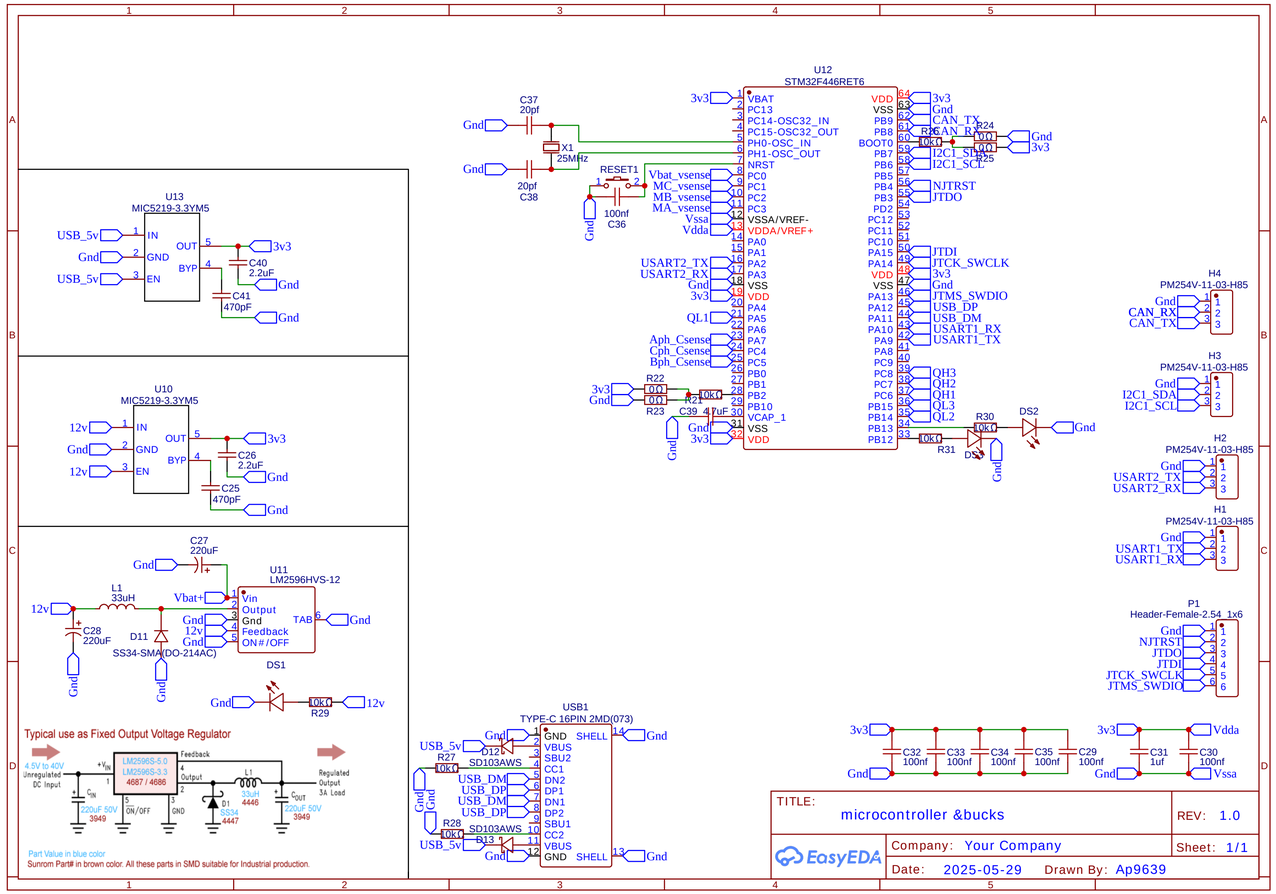
U12
STM32F446RET6
U13
MIC5219-3.3YM5
U10
MIC5219-3.3YM5
U11
LM2596HVS-12
USB1
TYPE-C 16PIN 2MD(073)
H1
PM254V-11-03-H85
H2
PM254V-11-03-H85
H3
PM254V-11-03-H85
H4
PM254V-11-03-H85
P1
Header-Female-2.54_1x6
X1 25MHz
RESET1
DS1
DS2
DS3
Typical use as Fixed Output Voltage Regulator
4.5V to 40V Unregulated DC Input
LM2596S-5.0
LM2596S-3.3
4687 / 4686
Feedback
Regulated Output 3A Load
Part Value in blue color
Sunrom Part# in brown color. All these parts in SMD suitable for Industrial production.
TITLE:
microcontroller &bucks
REV: 1.0
Company: Your Company
Sheet: 1/1
Date: 2025-05-29
Drawn By: Ap9639
EasyEDA