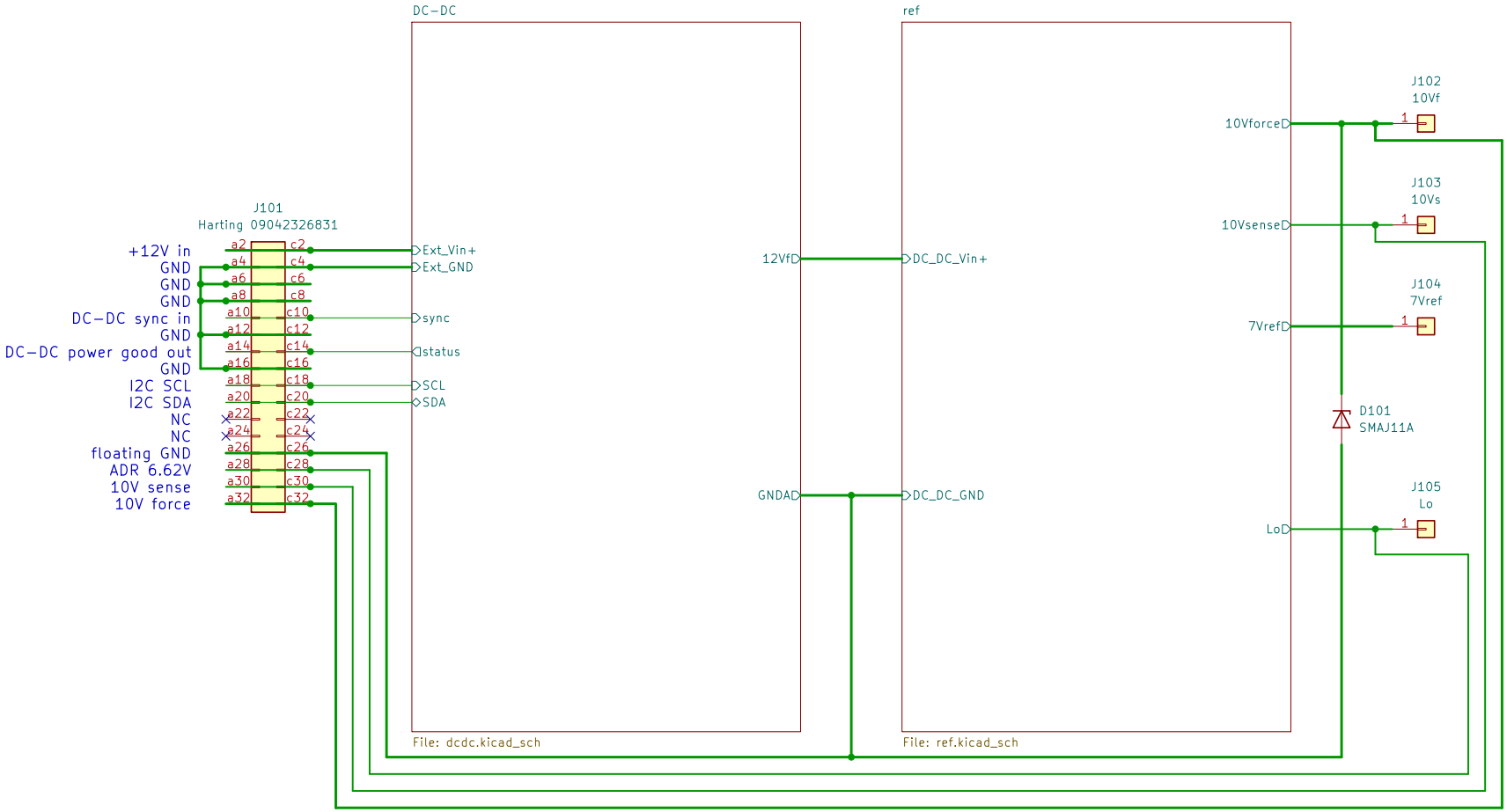

All capacitors X7R MLCC unless otherwise noted
All resistors 0.1% MF unless otherwise noted

RPG

Sheet: /
File: ADRmu.kicad_sch

Title: Parent schematic

Size: A4	Date: 2022-02-11	**Rev: 0.3**
KiCad E.D.A. kicad (6.0.0)		Id: 1/3

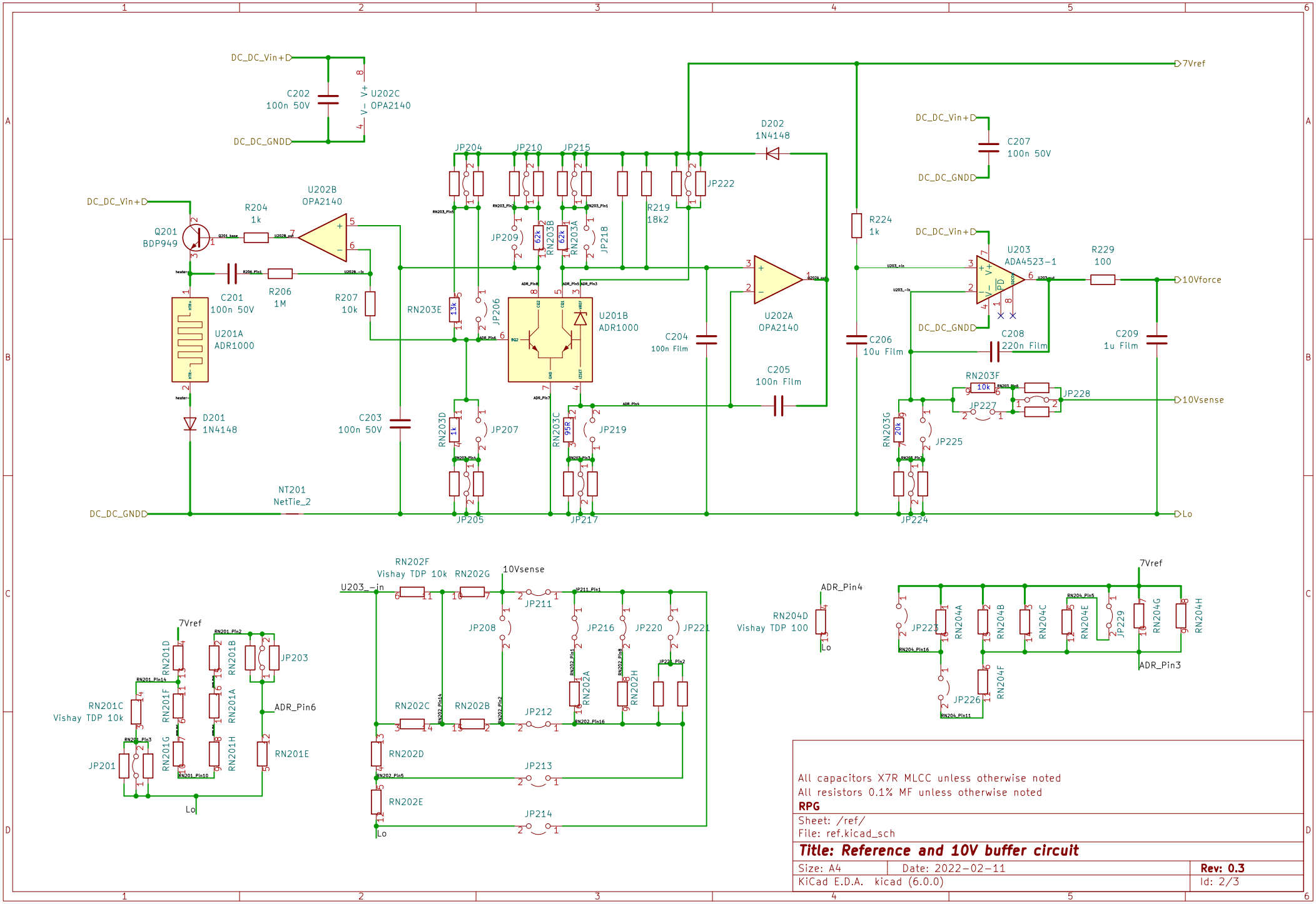

All capacitors X7R MLCC unless otherwise noted
All resistors 0.1% MF unless otherwise noted

RPG

Sheet: /ref/
File: ref.kicad_sch

Title: Reference and 10V buffer circuit

Size: A4	Date: 2022-02-11	**Rev: 0.3**
KiCad E.D.A. kicad (6.0.0)		Id: 2/3

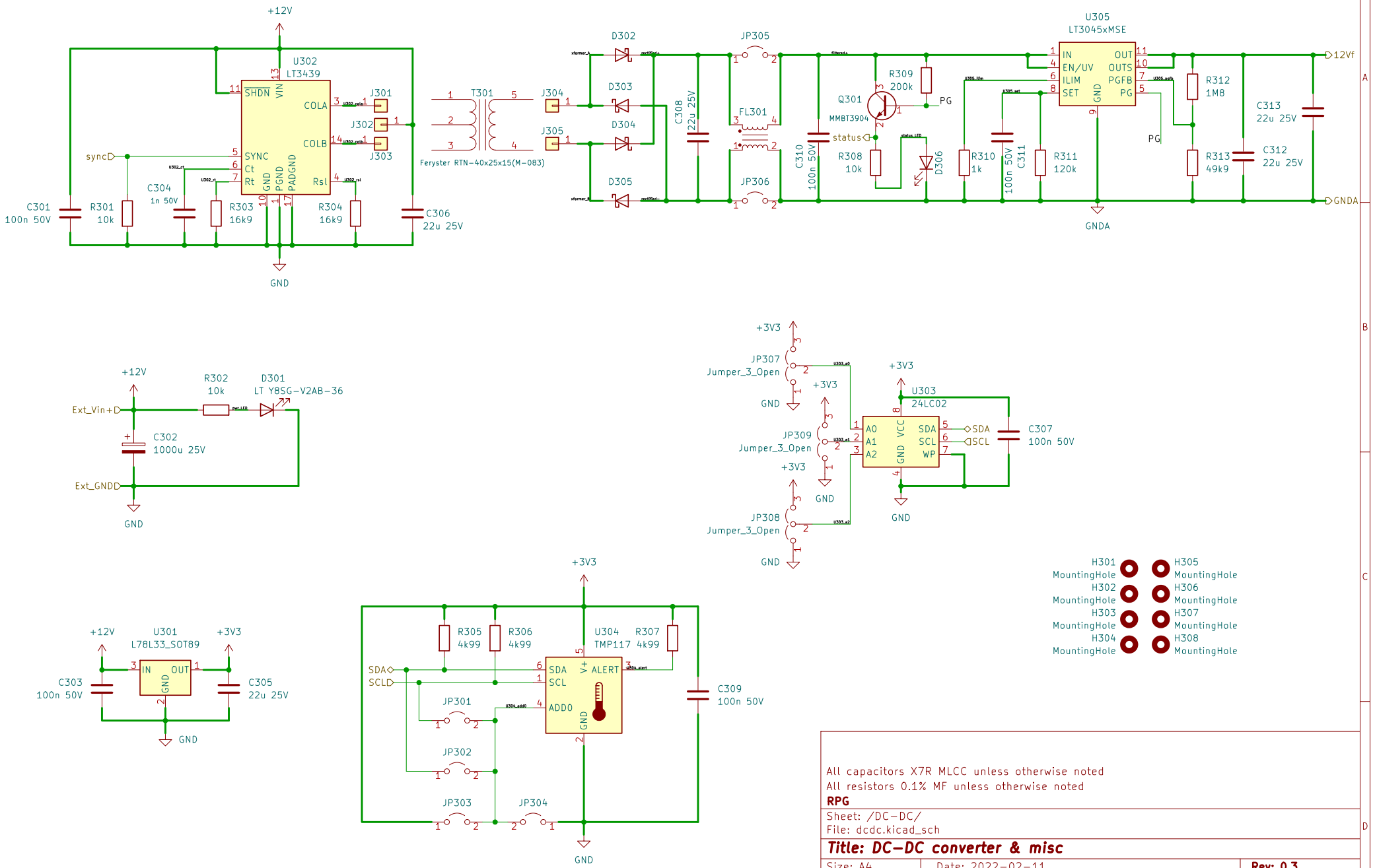

All capacitors X7R MLCC unless otherwise noted
All resistors 0.1% MF unless otherwise noted

RPG

Sheet: /DC-DC/
File: dcdc.kicad_sch

Title: DC-DC converter & misc

Size: A4	Date: 2022-02-11	**Rev: 0.3**
KiCad E.D.A. kicad (6.0.0)		Id: 3/3