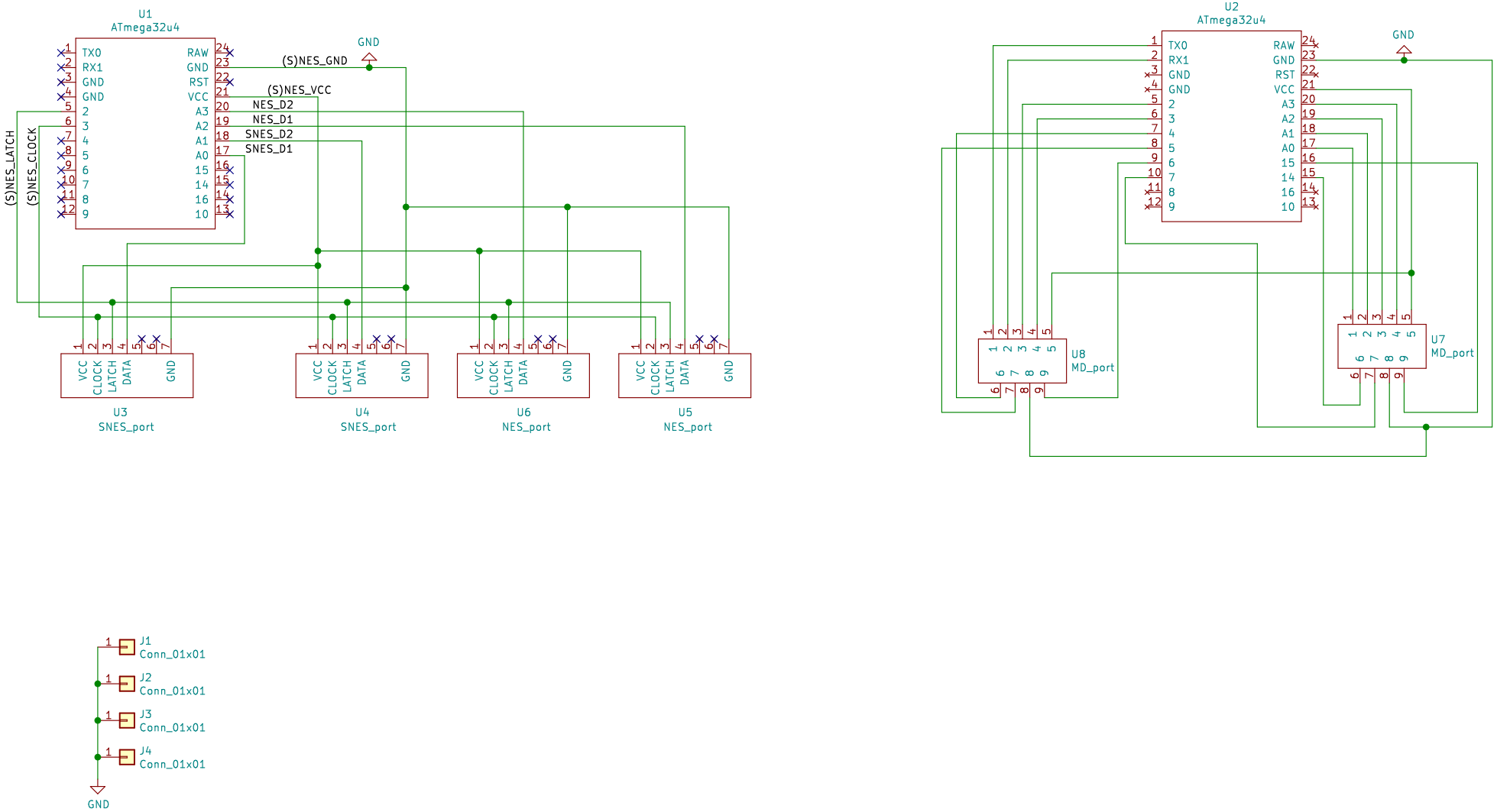

Sheet: /
File: daemonbite_controller_hub.kicad_sch

Title: Daemonbite Controller Hub

Size: A4	Date: 2021-04-29	**Rev: 0.1**
KiCad E.D.A. kicad (5.99.0-9987-g41839f7e3f)		Id: 1/1

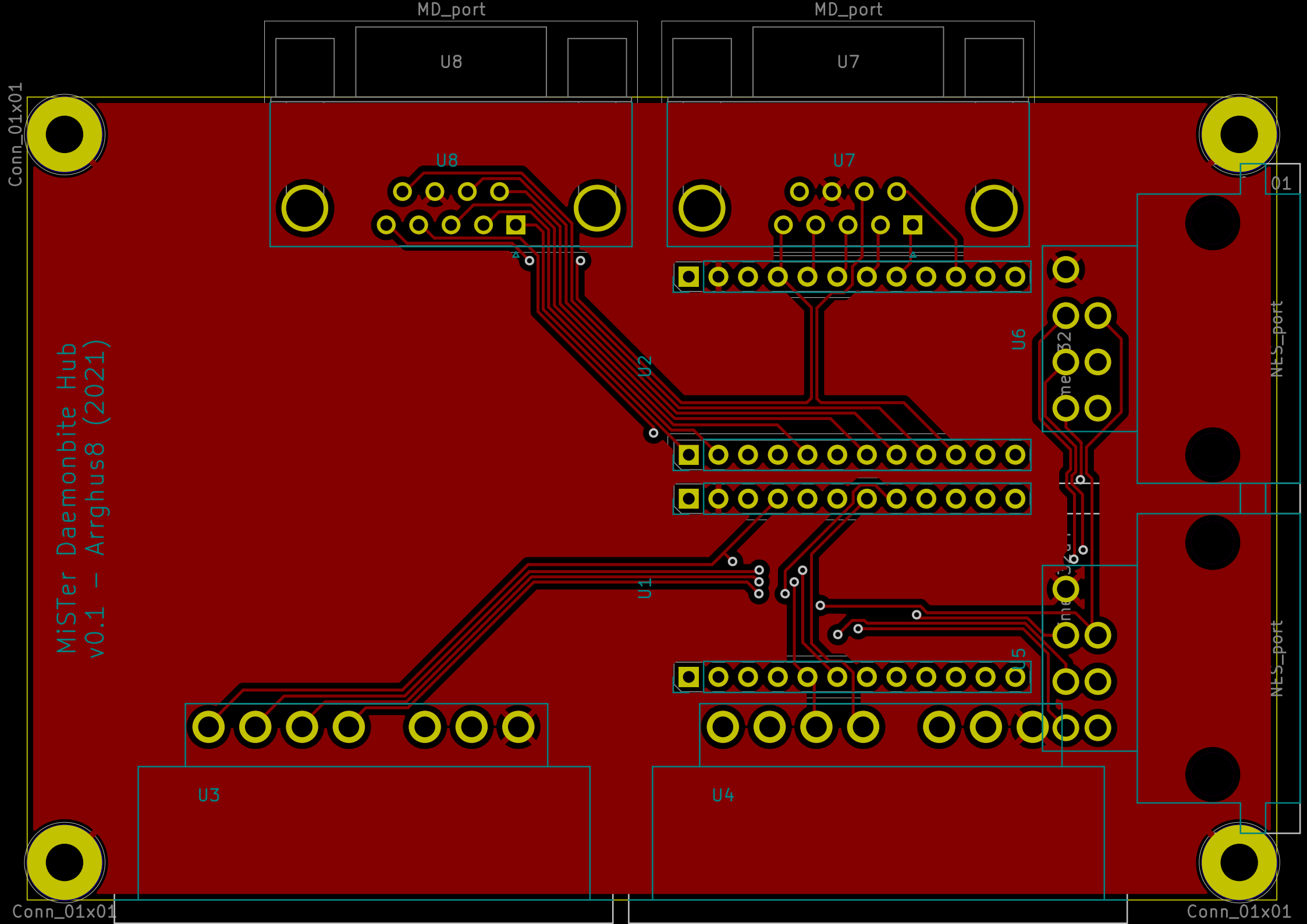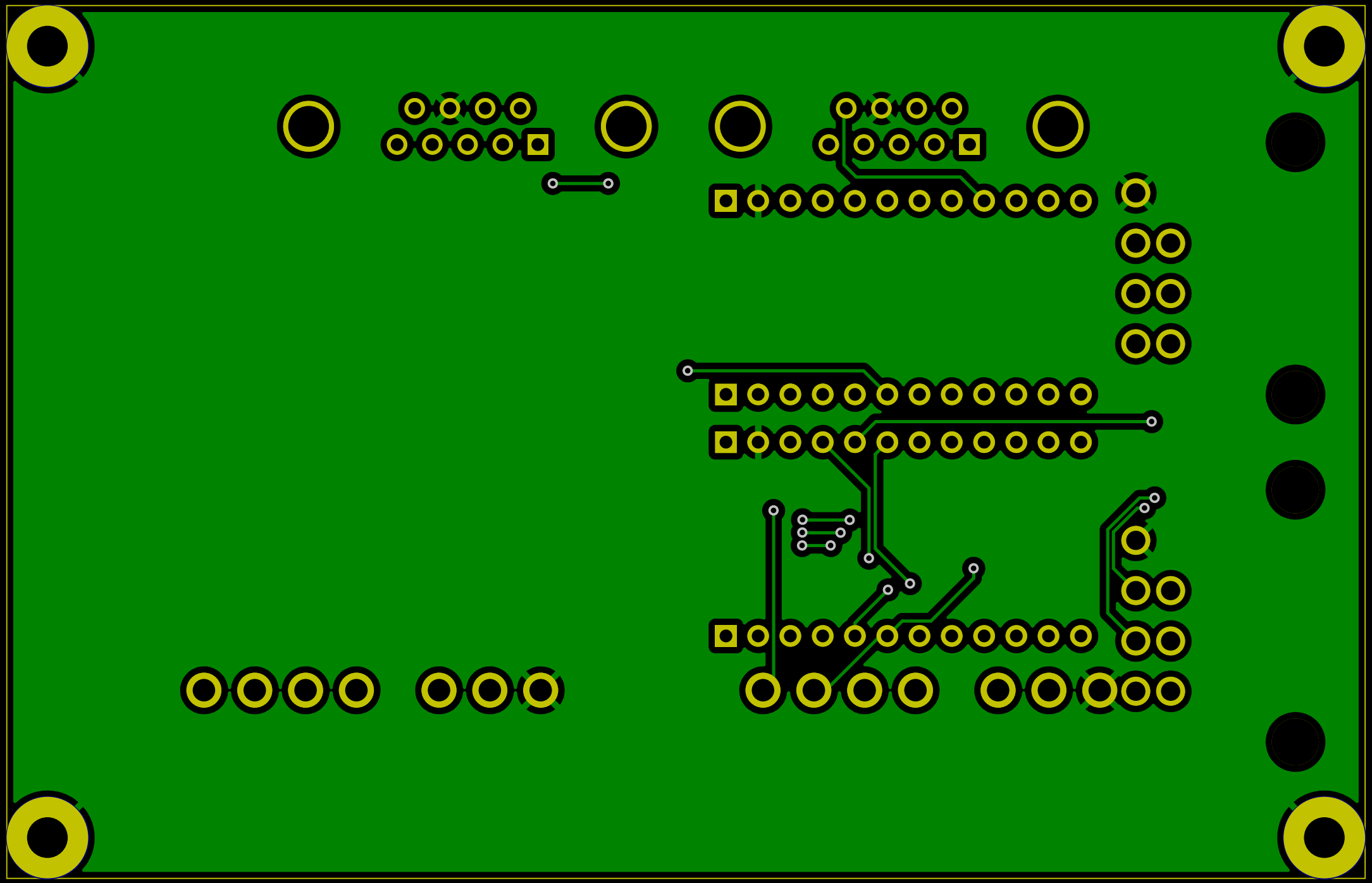
MD_port
U8
MD_port
U7
Conn_01x01
U8
U7
U2
U6
U1
U5
U3
U4
NES_port
NES_port
01
MiSTer Daemonbite Hub
v0.1 - Arrghus8 (2021)
Conn_01x01
Conn_01x01