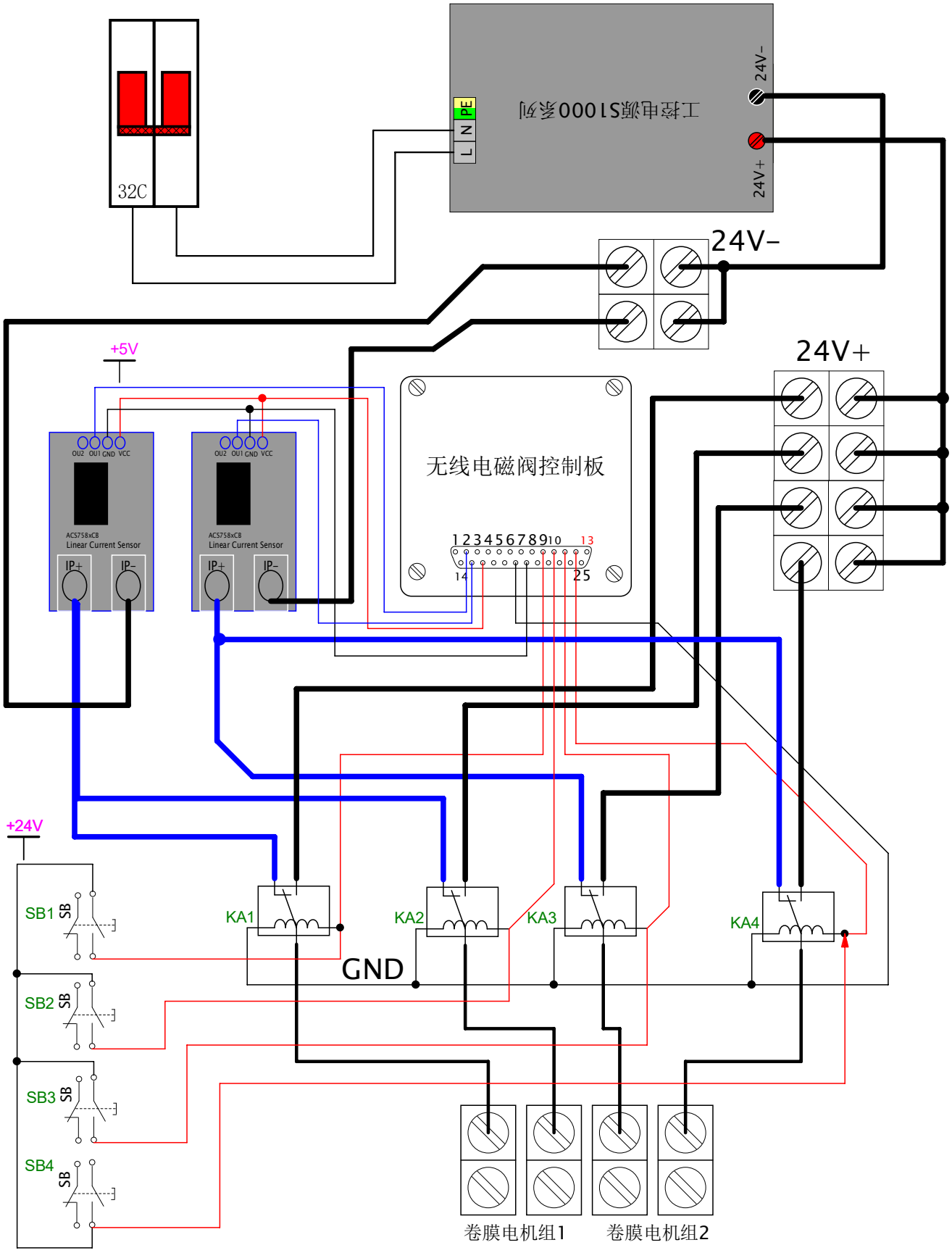

Responsible dep.	Technical reference	Created	Approved	
		Document type 一拖多卷膜机控制箱电气原理图	Document status 样机	Rev.
		Title, supplementary title		Scale
			Date of issue 2019-10-08	Lang. / Sheet 1/1