R1 33k
R2, R4 68k
R3, R5 2.5k
R6 10k
R7 3k

C1 10uF 400V
C2 2.2uF 10V
C3 200uF 30V
C4 2.2uF 50V

U1 IPP60R190P6 FET

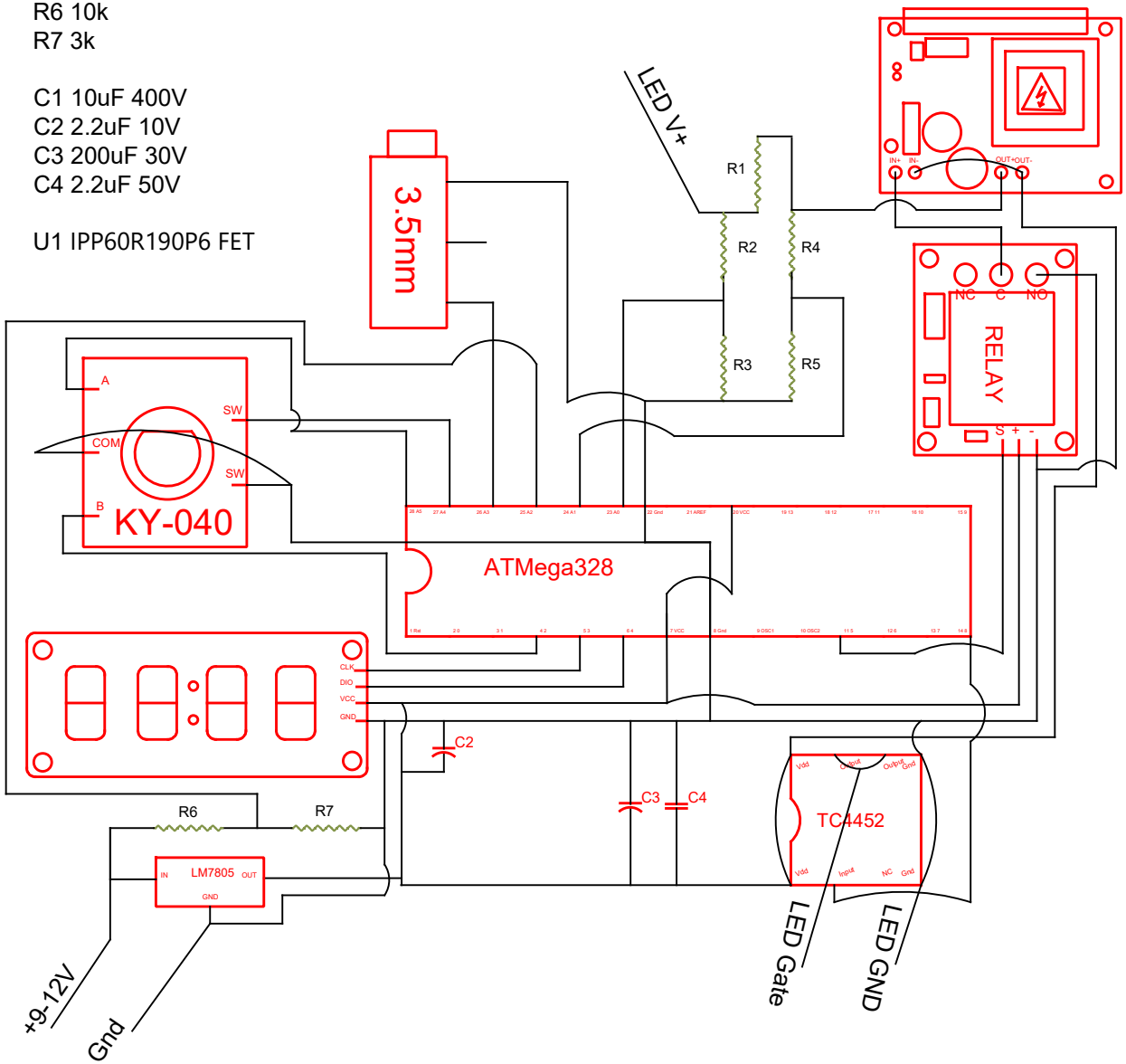

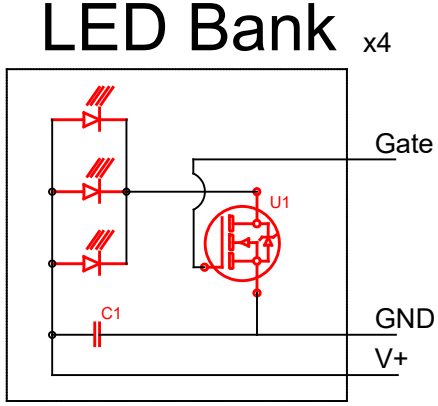

TITLE		FILE
Complete Circuit Diagram		Edgerton - High Speed Flash
DATE 2019-05	REV 1.0	*Tyler Gerritsen* *www.td0g.ca*