Traditional Manufacturing Processes

- Casting
- Forming
- Sheet metal processing
- Powder- and Ceramics Processing
- Plastics processing
- Cutting
- Joining
- Surface treatment

Casting

Casting is a manufacturing process in which molten/liquid material is poured into a mold containing a cavity of specific shape, and then allowed to solidify. The solid casting is then taken out and cleaned to complete the process

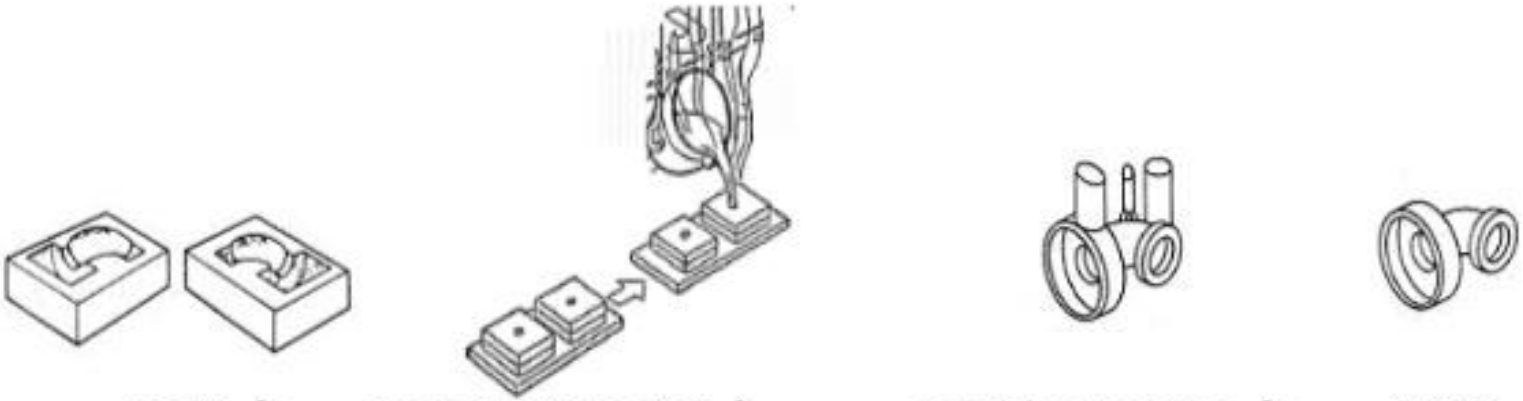

mold → pour liquid metal → solidify, remove → finish

Advantages

- VERSATILE:
  - complex geometry, internal cavities/ external shapes, hollow sections
  - Wide range of Weight and size
    - small (~10 grams) → very large parts (100 tones)
    - Teeth Zipper (few mm)→ Ocean Liner Propeller (10 m)
  - Net Shape, Near Net Shape
  - Any Metal (that can be melt)
  - Some metal can only be cast
  - Simplified Construction
  - Some Engineering properties are only possible in casting
    - Isotropic
    - Machinability
    - Damping capacity
    - Good Bearing qualities
    - Strength and Lightness

- ECONOMICAL:
  - little wastage (extra metal is re-used) Low cost
  - Suitable for mass production

Limitations Depend upon casting method

- Mechanical Properties
- Porosity
- Poor Dimensional Accuracy
- Surface Finish
- Safety Hazard

Types of Foundries

- Based on material
  - Ferrous , Non ferrous, gray Iron, Steel, Brass, Light metal

- Based on nature and Organisational Framework
  - Jobbing foundry(A foundry that creates a wide variety of castings, in small quantities for a range of customers)
  - Production foundry
  - Semi Production foundry
  - Captive foundry(A foundry operation that is wholly incorporated into a larger manufacturing operation)
  - Independent foundry

Casting Process

- Preparing a mold cavity of the desired shape with proper allowances and provided with means for the escape of air or gases.
- Melting the metal with acceptable quality and temperature.
- Pouring the metal into the cavity.
- Solidification process designed and controlled to avoid defects.
- Casting removal.
- Finishing, cleaning and inspection operations.

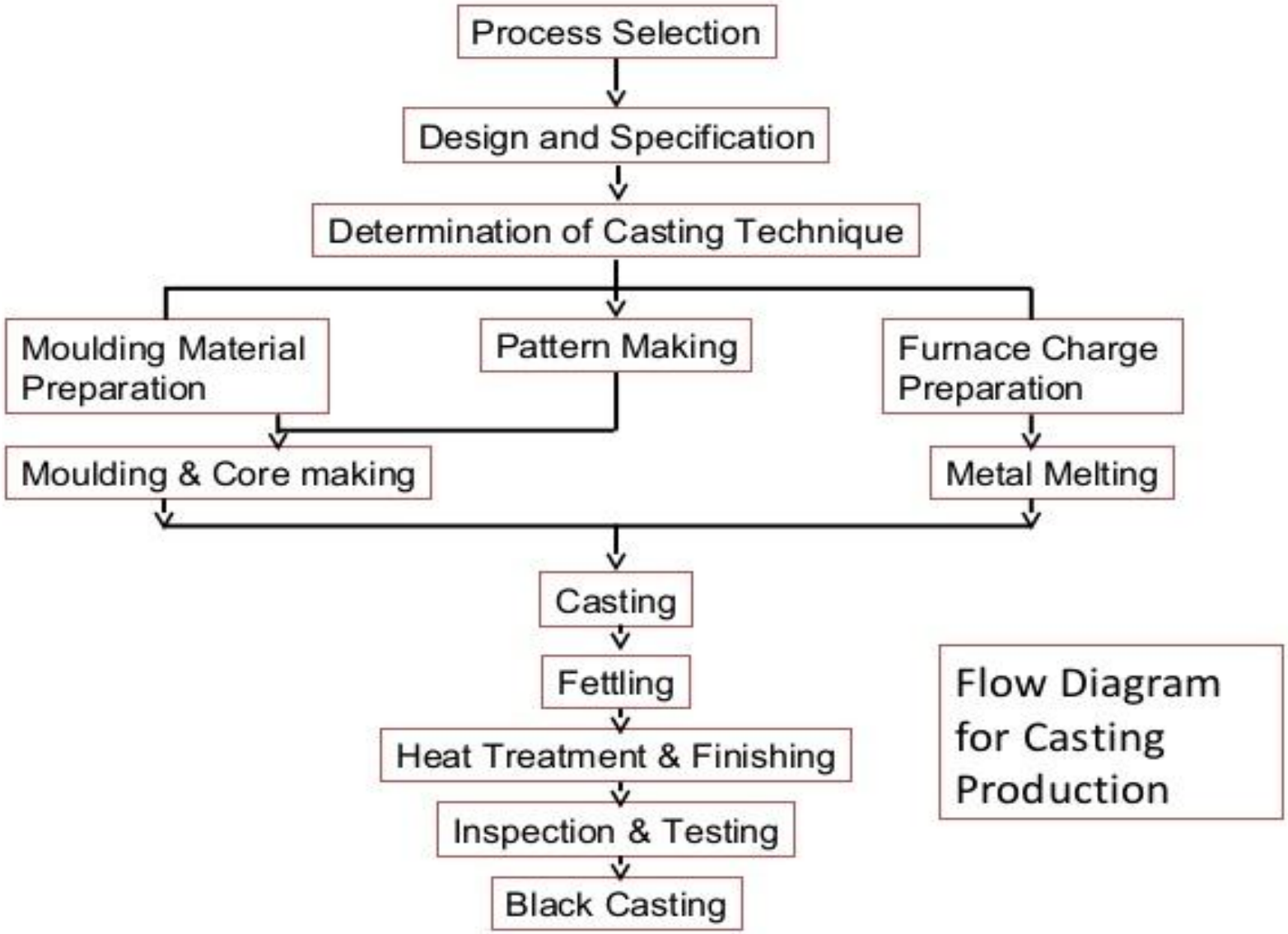

Flow Diagram for Casting Production

Pattern:

- A Pattern is a model or the replica of the object to be cast.
- Except for the various allowances a pattern exactly resembles the casting to be made.
- Patterns may be in two or three pieces, where as casting are in a single piece.
- A pattern is required even if one object has to be cast.
- The quality of casting and the final product will be effected to a great extent by the planning of pattern.

Functions of Patterns:

- A Pattern prepares a mould cavity for the purpose of making a casting.
- A Pattern may contain projections known as core prints if the casting requires a core and need to be made hollow.
- Risers, runners and gates may form a part of the pattern.
- Patterns properly made and having finished and smooth surfaces reduce casting defects.
- Properly constructed patterns minimize overall cost of the casting.

Selection of Pattern Materials:

The following factors assist in selecting proper pattern material:

- No. of castings to be produced.
- Metal to be cast.
- Dimensional accuracy & surface finish.
- Shape, complexity and size of casting.
- Casting design parameters.
- Type of molding materials.
- The chance of repeat orders.
- Nature of molding process.
- Position of core print.

Materials for making patterns:

a. Wood
b. Metal
c. Plastic
d. Plaster
e. Wax.

1. Wood Patterns:

These are used where the no. of castings to be produced is small and pattern size is large.

<u>*Advantages*</u>:

- ✓ Inexpensive
- ✓ Easily available in large quantities
- ✓ Easy to fabricate
- ✓ Light in weight
- ✓ They can be repaired easily
- ✓ Easy to obtain good surface finish

Limitations:

- Susceptible to shrinkage and swelling
- Possess poor wear resistance
- Abraded easily by sand action
- Absorb moisture, consequently get wrapped
- Cannot withstand rough handling
- Life is very short

Commonly used woods for making patterns:

a. Teak
b. Pine
c. Mahogony
d. Deodar etc..

2. Metal Patterns:

These are employed where large no. of castings have to be produced from same patterns.

<u>Advantages</u>:

- ✓ Do not absorb moisture
- ✓ More stronger
- ✓ Possess much longer life
- ✓ Do not wrap, retain their shape
- ✓ Greater resistance to abrasion
- ✓ Accurate and smooth surface finish
- ✓ Good machinability

Limitations:

- Expensive
- Require a lot of machining for accuracy
- Not easily repaired
- Ferrous patterns get rusted
- Heavy weight , thus difficult to handle

Commonly used metals for making patterns:

i. Cast iron
ii. Aluminium and its alloys
iii. Steel
iv. White metal
v. Brass etc..

3. Plastic Patterns:

Advantages:

- ✓ Durable
- ✓ Provides a smooth surface
- ✓ Moisture resistant
- ✓ Does not involve any appreciable change in size or shape
- ✓ Light weight
- ✓ Good strength
- ✓ Wear and corrosion resistance
- ✓ Easy to make
- ✓ Abrasion resistance
- ✓ Good resistance to chemical attack

Limitations:

- Plastic patterns are Fragile
- These are may not work well when subject to conditions of severe shock as in machine molding (jolting).

4. Plaster Patterns:

Advantages:

- ✓ It can be easily worked by using wood working tools.
- ✓ Intricate shapes can be cast without any difficulty.
- ✓ It has high compressive strength.

- ➢ *Plaster may be made out of Plaster of paris or Gypsum cement.*
- ➢ *Plaster mixture is poured into a mould made by a sweep pattern or a wooden master pattern, in order to obtain a Plaster pattern.*

5. Wax patterns:

Advantages:

- ✓ Provide very good surface finish.
- ✓ Impart high accuracy to castings.
- ✓ After being molded, the wax pattern is not taken out of the mould like other patterns;
- ✓ rather the mould is inverted and heated; the molten wax comes out and/or is evaporated.
- ✓ Thus there is no chance of the mould cavity getting damaged while removing the pattern.

➢ *Wax patterns find applications in Investment casting process.*

TYPES OF PATTERNS

Types of patterns depend upon the following factors:

i. The shape and size of casting
ii. No. of castings required
iii. Method of moulding employed
iv. Anticipated difficulty of moulding operation

Types of Patterns:

1. Single piece pattern.
2. Split piece pattern.
3. Loose piece pattern.
4. Match plate pattern.
5. Sweep pattern.
6. Gated pattern.
7. Skeleton pattern
8. Follow board pattern.
9. Cope and Drag pattern.

1. Single piece (solid) pattern:

- Made from one piece and does not contain loose pieces or joints.
- Inexpensive.
- Used for large size simple castings.
- Pattern is accommodated either in the cope or in the drag.

Examples:

1. Bodies of regular shapes.
2. stuffling box of steam engine.

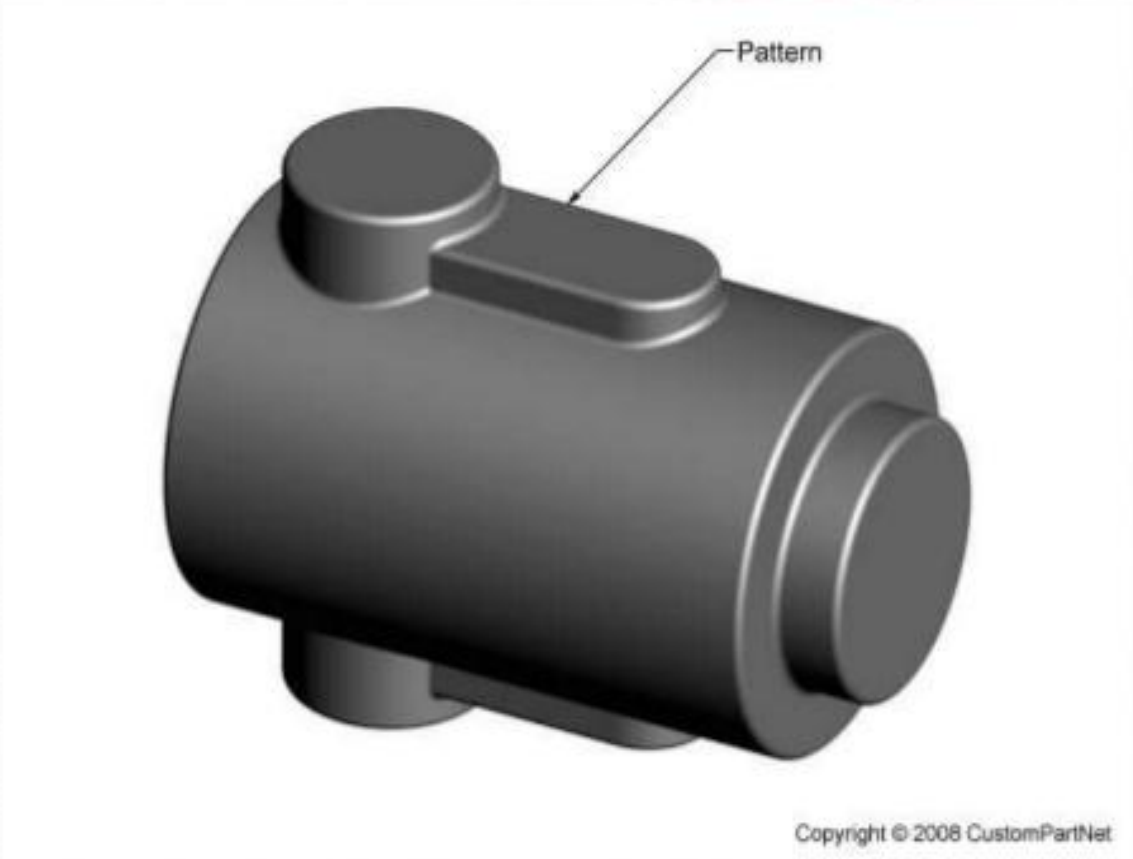

Fig: Single piece pattern

2. Split piece pattern:

- Patterns of intricate shaped castings cannot be made in one piece because of the inherent difficulties associated with the molding operations (e.g. withdrawing pattern from mould).
- The upper and the lower parts of the split piece patterns are accommodated in the cope and drag portions of the mold respectively.
- Parting line of the pattern forms the parting line of the mould.
- Dowel pins are used for keeping the alignment between the two parts of the pattern.
- Examples:
    1. Hallow cylinder
    2. Taps and water stop cocks etc.,

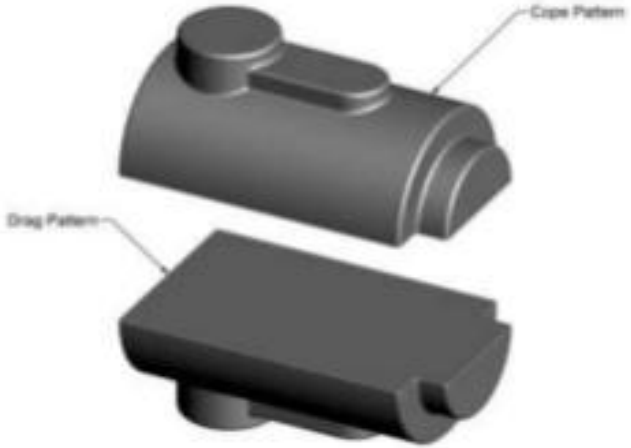

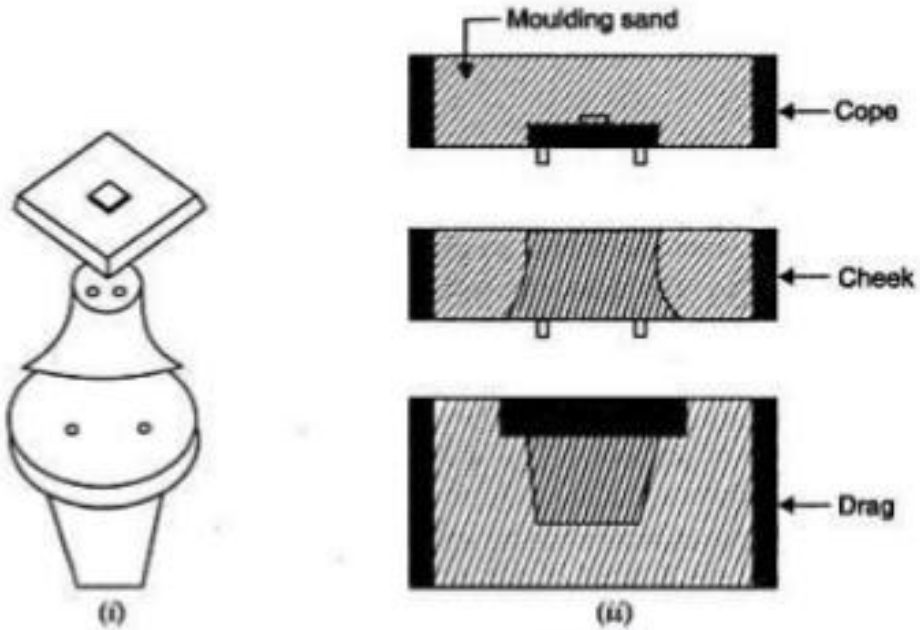

Fig. 2.3. Multipiece pattern.

3.Loose piece pattern:

- Certain patterns cannot be withdrawn once they are embedded in the molding sand. Such patterns are usually made with one or more loose pieces for facilitating from the molding box and are known as loose piece patterns.
- Loose parts or pieces remain attached with the main body of the pattern, with the help of dowel pins.
- The main body of the pattern is drawn first from the molding box and thereafter as soon as the loose parts are removed, the result is the mold cavity.

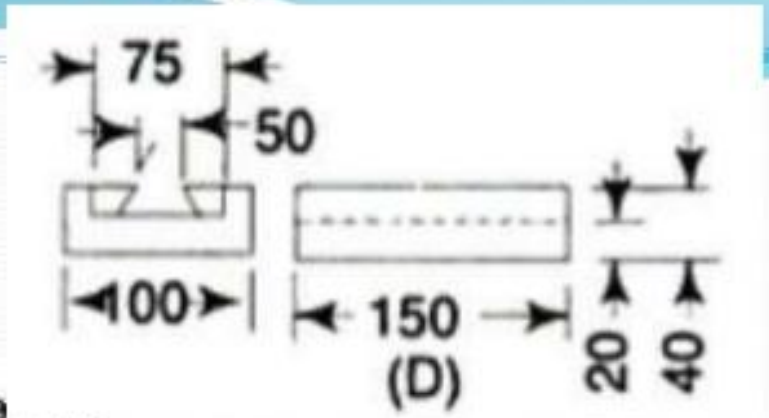

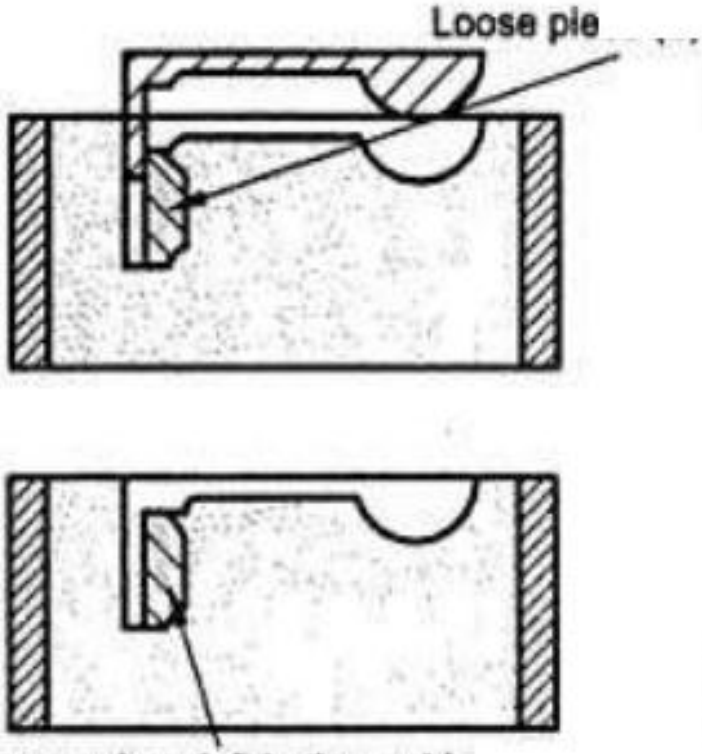

Loose piece left in the mold after pattern removal (b)

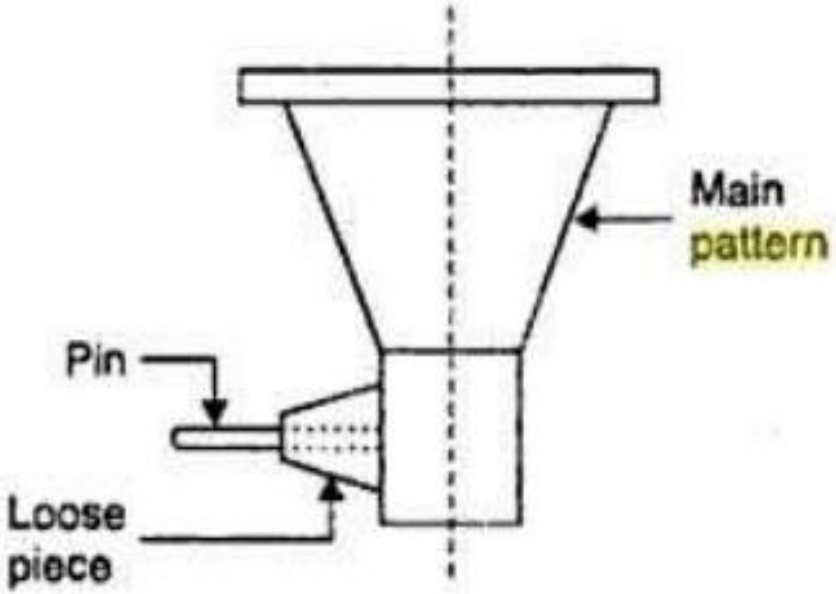

Fig. 1.75. Loose piece pattern.

4. Match plate pattern:

- It consists of a match plate, on either side of which each half of split patterns is fastened.
- A no. of different sized and shaped patterns may be mounted on one match plate.
- The match plate with the help of locator holes can be clamped with the drag.
- After the cope and drag have been rammed with the molding sand, the match plate pattern is removed from in between the cope and drag.
- Match plate patterns are normally used in machine molding.
- By using this we can eliminate mismatch of cope and drag cavities.

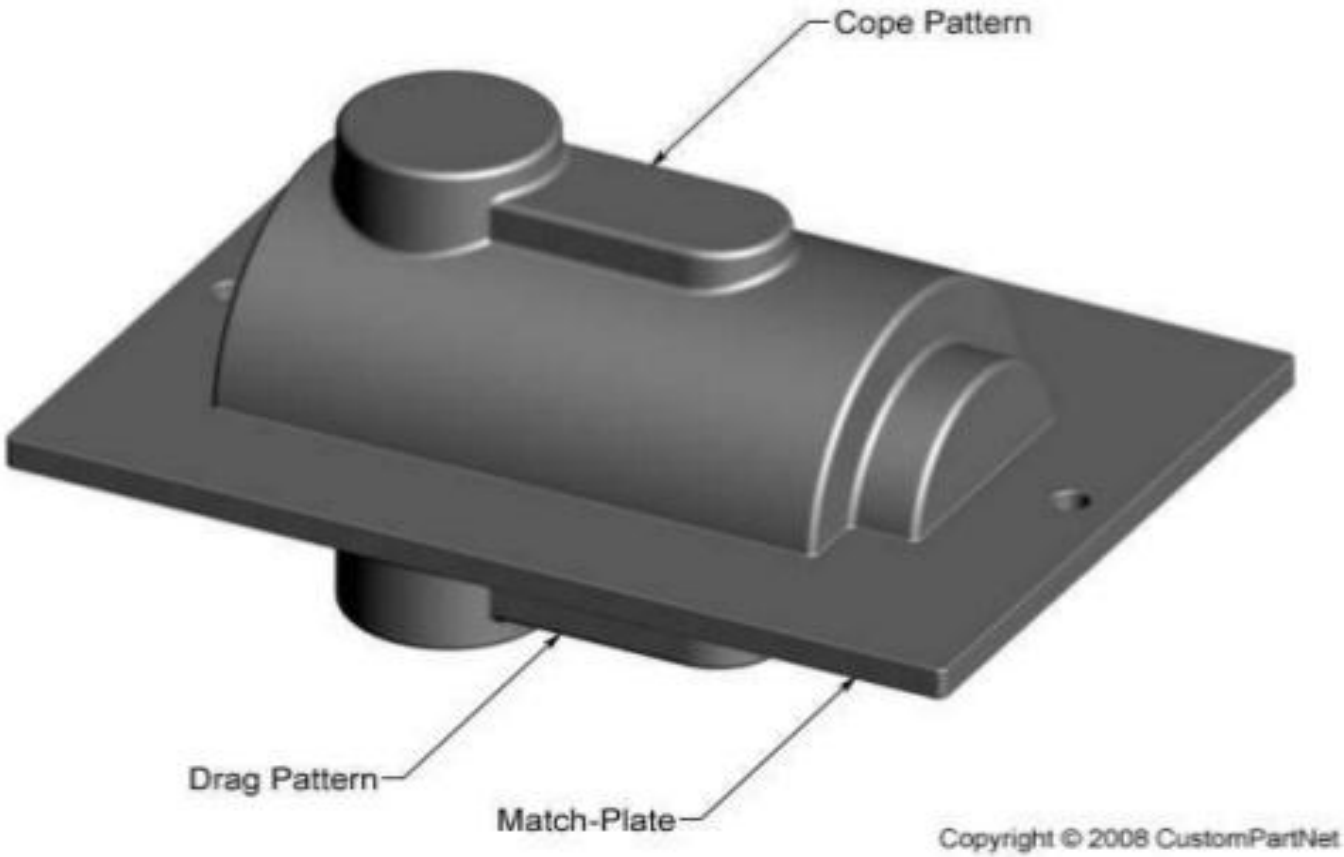

Fig: Match plate pattern

5. Sweep pattern:

- A sweep pattern is just a form made on a wooden board which sweeps the shape of the casting into the sand all around the circumference. The sweep pattern rotates about the post.
- Once the mold is ready, Sweep pattern and the post can be removed.
- Sweep pattern avoids the necessity of making a full, large circular and costly three-dimensional pattern.
- Making a sweep pattern saves a lot of time and labour as compared to making a full pattern.
- A sweep pattern is preferred for producing large casting of circular sections and symmetrical shapes.

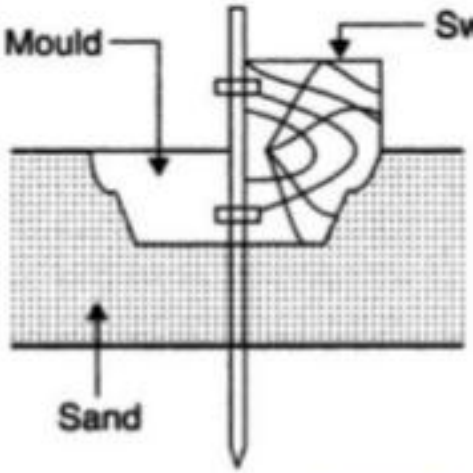

Fig. 2.8. Sweep pattern.

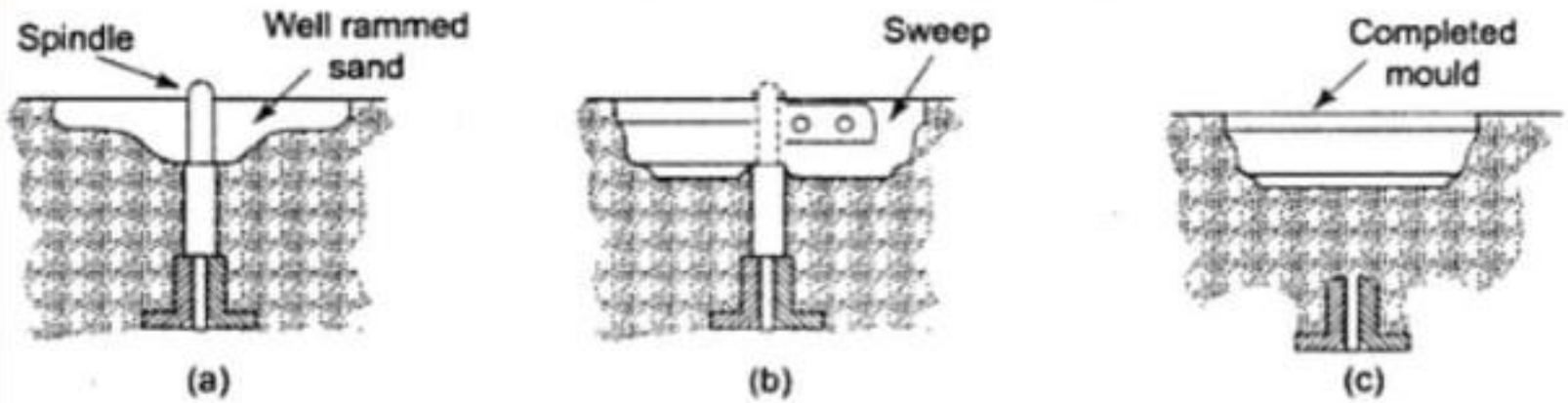

Fig. 3.15 *Sweep pattern*

6. Gated pattern:

- The sections connecting different patterns serve as runner and gates.
- This facilitates filling of the mould with molten metal in a better manner and at the same time eliminates the time and labour otherwise consumed in cutting runners and gates.
- A gated pattern can manufacture many casting at one time and thus it is used in mass production systems.
- Gated patterns are employed for producing small castings.

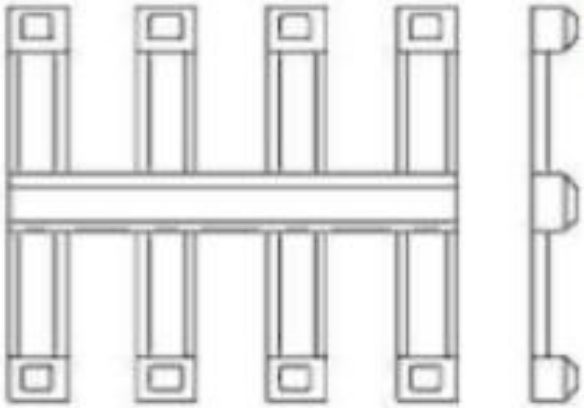

Fig. 1.10 Gated pattern

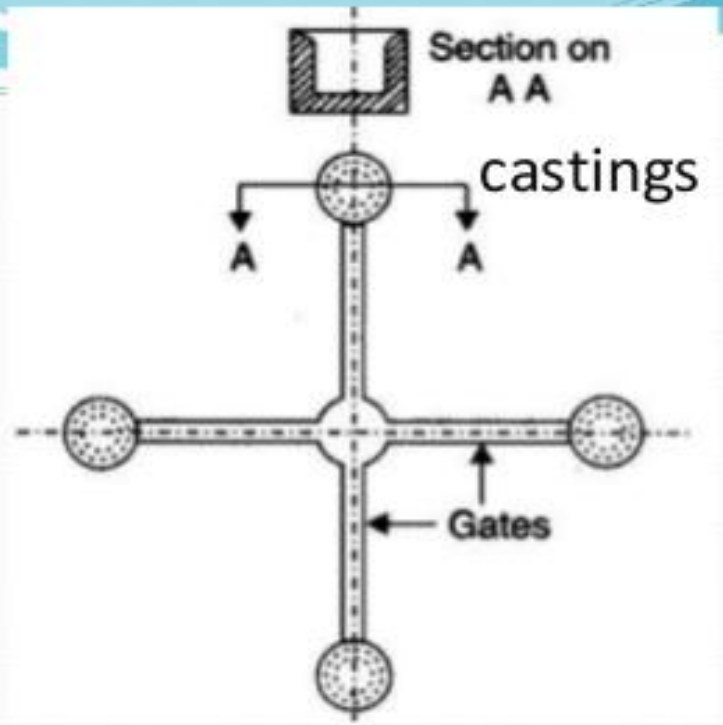

7. Skeleton pattern:

- A skeleton pattern is the skeleton of a desired shape which may be S-bend pipe or a chute or something else. The skeleton frame is mounted on a metal base
- The skeleton is made from wooden strips, and is thus a wooden work.
- The skeleton pattern is filled with sand and is rammed.
- A strickle (board) assists in giving the desired shape to the sand and removes extra sand.
- Skeleton patterns are employed for producing a few large castings.
- A skeleton pattern is very economical, because it involves less material costs.

Fig. 1.78. A skeleton pattern for a flanged pipe.

8. Follow board pattern:

- A follow board is a wooden board and is used for supporting a pattern which is very thin and fragile and which may give way and collapse under pressure when the sand above the pattern is being rammed.
- With the follow board support under the weak pattern, the drag is rammed, and then the fallow board is with drawn, The rammed drag is inverted, cope is mounted on it and rammed.
- During this operation pattern remains over the inverted drag and get support from the rammed sand of the drag under it.
- Follow boards are also used for casting master patterns for many applications.

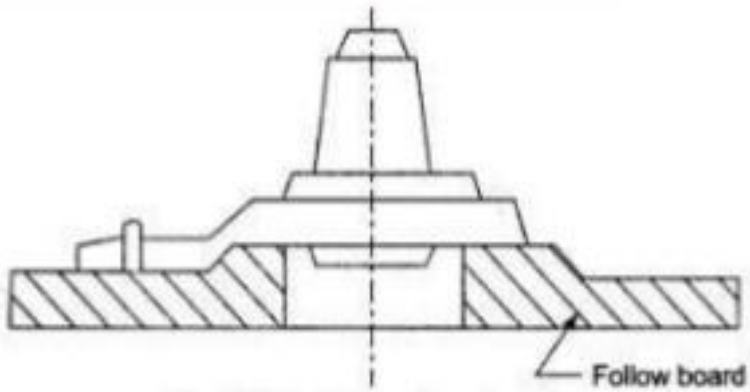

Fig. 3.14 *Follow board pattern*

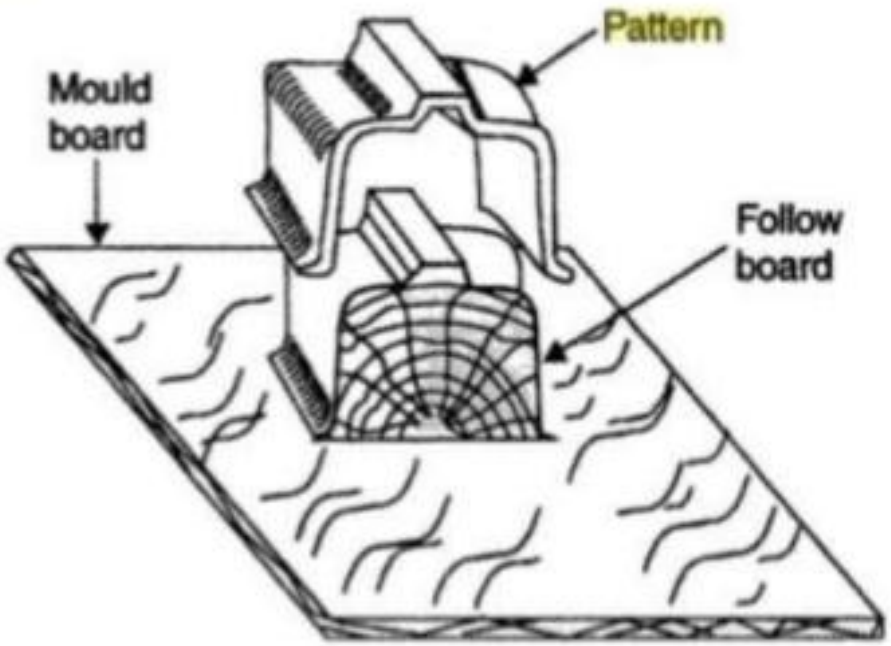

Fig. 1.80. A follow board pattern.

9. Cope and Drag patterns:

- A cope and drag pattern is another form of split pattern.
- Each half of the pattern is fixed to a separate metal/wood plate.
- Each half of the pattern(along the plate) is molded separately in a separate molding box by an independent molder or moulders.
- The two moulds of each half of the pattern are finally assembled and the mould is ready for pouring.
- Cope and drag patterns are used for producing big castings which as a whole cannot be conveniently handled by one moulder alone.

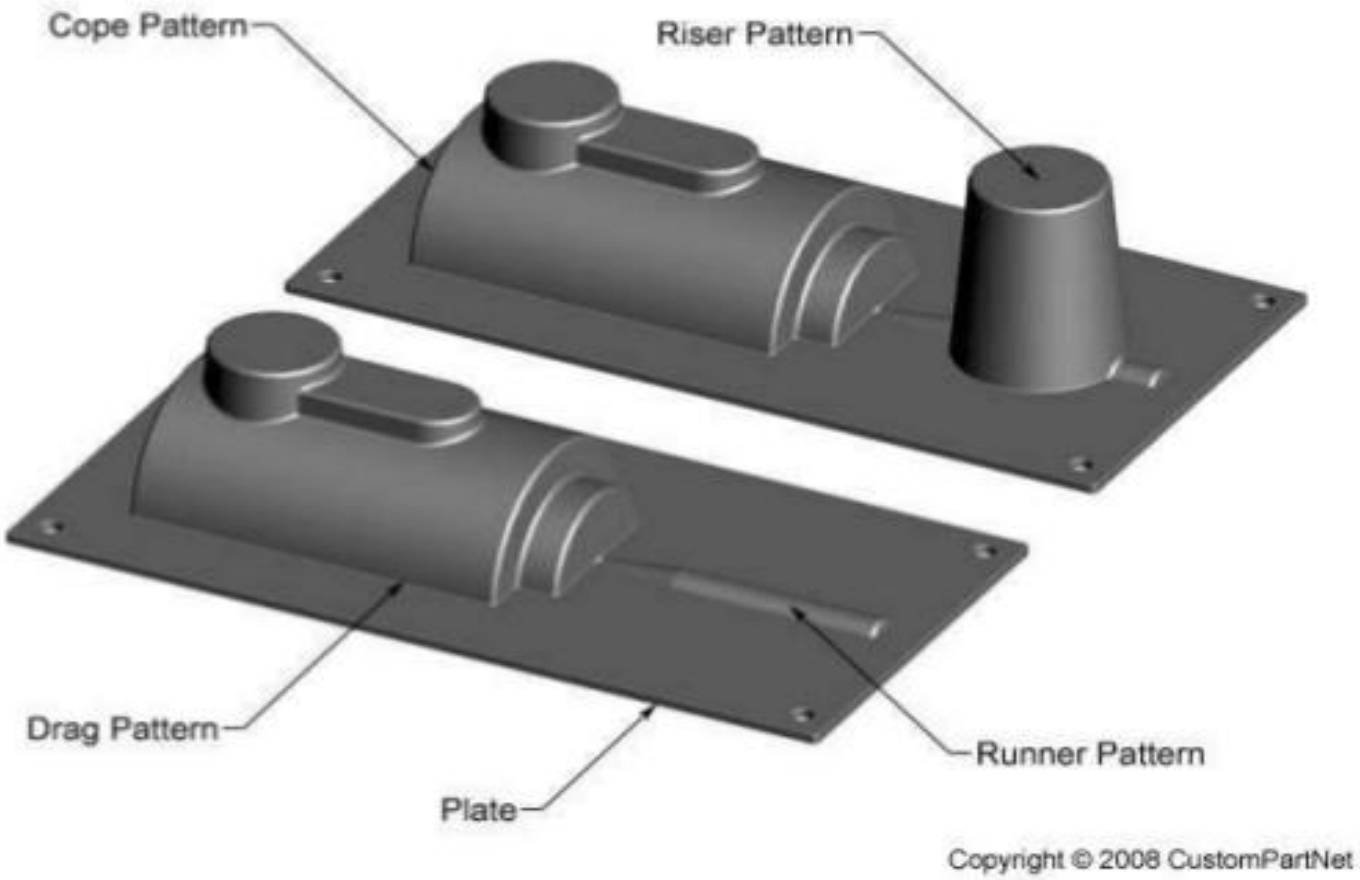

Fig: Cope and drag pattern

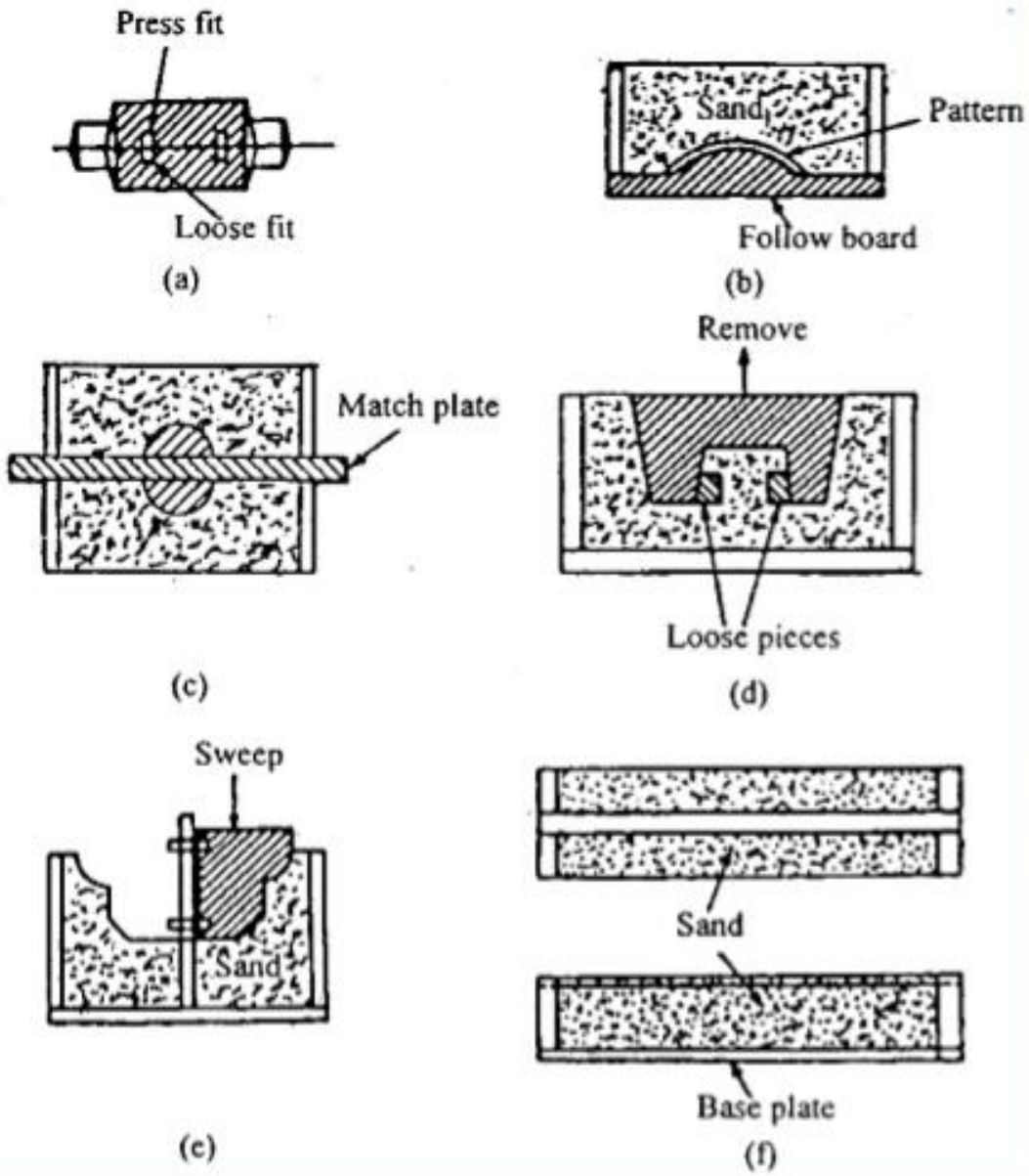

(a)Split pattern
(b) Follow-board
(c) Match Plate
(d) Loose-piece
(e) Sweep
(f) Skeleton pattern

Types of patterns used in sand casting: (a) solid pattern, (b) split pattern, (c) match-plate pattern, and (d) cope-and-drag pattern.

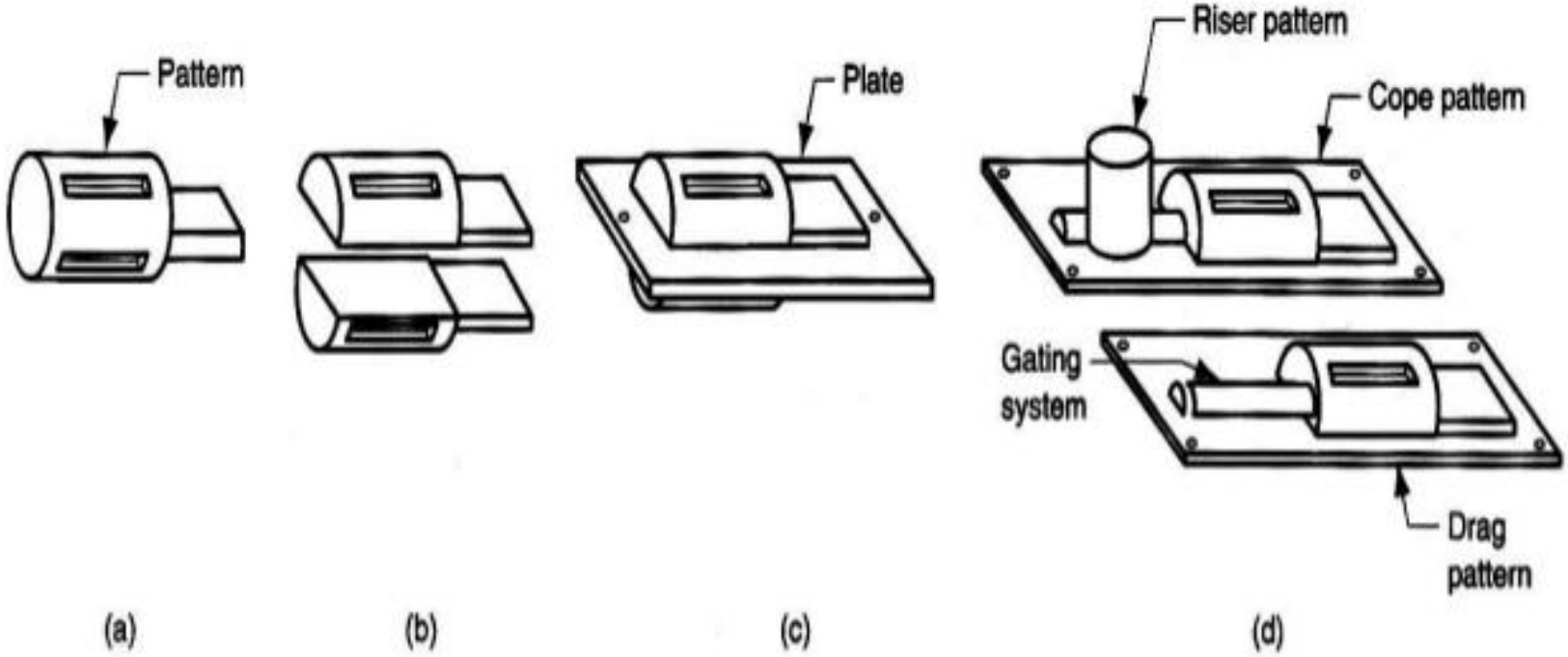

PATTERN ALLOWANCES

Pattern Allowances:

A pattern is larger in size as compared to the final casting, because it carries certain allowances due to metallurgical and mechanical reasons for example, shrinkage allowance is the result of metallurgical phenomenon where as machining, draft, distortion, shake and other allowances are provided on the patterns because of mechanical reasons.

Types of Pattern Allowances:

The various pattern allowances are:

1. shrinkage or contraction allowance.
2. Machining or finish allowance.
3. Draft of tapper allowances.
4. Distortion or chamber allowance.
5. Shake or rapping allowance.
6. Heat treatment Allowance

1.Shrinkage Allowance:

All most all cast metals shrink or contract volumetrically on cooling.

The metal shrinkage is of two types:

1. *Liquid Shrinkage*:

   it refers to the reduction in volume when the metal changes from liquid state to solid state at the solidus temperature. To account for this shrinkage; riser, which feed the liquid metal to the casting, are provided in the mold.

2. *Solid Shrinkage*:

   it refers to the reduction in volume caused when metal loses temperature in solid state. To account for this, shrinkage allowance is provided on the patterns.

- Almost all cast metals shrink or contract volumetrically after solidification and therefore the pattern to obtain a particular sized casting is made oversize by an amount equal to that of shrinkage or contraction.
- Different metals shrink at different rates because shrinkage is the property of the cast metal/alloy.
- *The metal shrinkage depends upon*:

1. The cast metal or alloy.
2. Pouring temp. of the metal/alloy.
3. Casted dimensions(size).
4. Casting design aspects.
5. Molding conditions(i.e., mould materials and molding methods employed)

Table 3. Contraction Allowance for Different Metals

S. No.	*Metals/Alloys*	*Contraction allowance mm/metre*
1.	Grey cast iron	7 to 10.5
2.	While cast iron	21
3.	Malleable iron	15
4.	Steel	20
5.	Copper	16
6.	Brass	16
7.	Bronze	10.5 to 21
8.	Zinc	24
9.	Lead	24
10.	Aluminium	16
11.	Magnesium	18

The contraction of metals/alloys is always volumetric, but the contraction allowances are always expressed in linear measures.

2. Machining Allowance:

A Casting is given an allowance for machining, because:

i. Castings get oxidized in the mold and during heat treatment; scales etc., thus formed need to be removed.
ii. It is the intended to remove surface roughness and other imperfections from the castings.
iii. It is required to achieve exact casting dimensions.
iv. Surface finish is required on the casting.

How much extra metal or how much machining allowance should be provided, depends on the factors listed below:

i. Nature of metals.
ii. Size and shape of casting.
iii. The type of machining operations to be employed for cleaning the casting.
iv. Casting conditions.
v. Molding process employed

Machining Allowances of Various Metals:

Table 2.3

Material	***Dimensions (in mm)***	***Machining allowance (in mm)***
Cast Iron	Up to 300 300 to 600	2.5 4.0
Aluminium	Up to 300 300 to 600	1.5 3.0
Cast Steel	Up to 300 300 to 600	3.0 4.5

3. Draft or Taper Allowance:

- It is given to all surfaces perpendicular to parting line.
- Draft allowance is given so that the pattern can be easily removed from the molding material tightly packed around it with out damaging the mould cavity.
- The amount of taper depends upon:
  i. Shape and size of pattern in the depth direction in contact with the mould cavity.
  ii. Moulding methods.
  iii. Mould materials.
  iv. Draft allowance is imparted on internal as well as external surfaces; of course it is more on internal surfaces.

The taper provided by the pattern maker on all vertical surfaces of the pattern so that it can be removed from the sand without tearing away the sides of the sand mold and without excessive rapping by the molder. Figure 3 (a) shows a pattern having no draft allowance being removed from the pattern. In this case, till the pattern is completely lifted out, its sides will remain in contact with the walls of the mold, thus tending to break it.

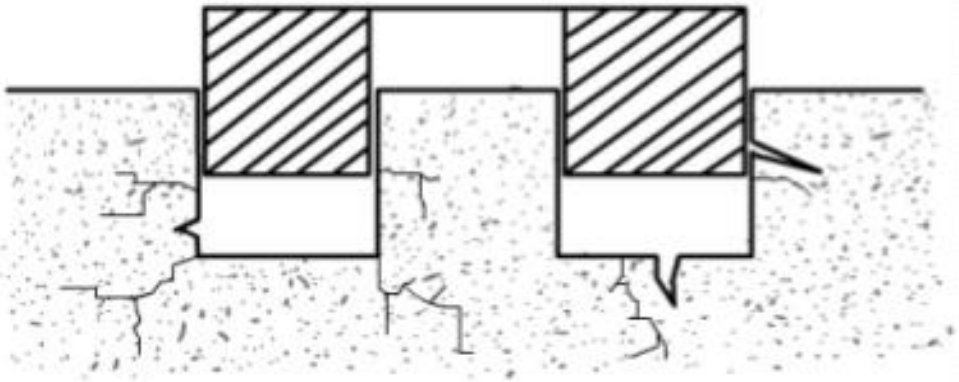

Figure 3 (a) Pattern Having No Draft on Vertical Edges

Figure 3 (b) is an illustration of a pattern having proper draft allowance. Here, the moment the pattern lifting commences, all of its surfaces are well away from the sand surface. Thus the pattern can be removed without damaging the mold cavity.

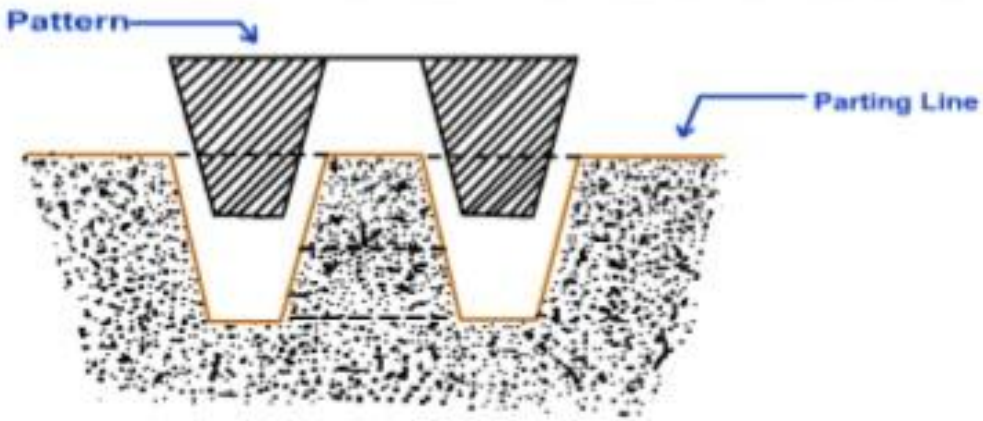

Figure 3 (b) Pattern Having Draft on Vertical Edges

Table 7.2 Suggested draft values for patterns

Pattern material	*Height of the given surface, mm*	*Draft angle of surfaces, degrees*	
		External surface	*Internal surface*
Wood	upto 20	3.00	3.00
	21 to 50	1.50	2.50
	51 to 100	1.00	1.50
	101 to 200	0.75	1.00
	201 to 300	0.50	1.00
	301 to 800	0.50	0.75
	801 to 2000	0.35	0.50
	over 2000	—	0.25
Metal and plastic	20	1.50	3.00
	21 to 50	1.00	2.00
	51 to 100	0.75	1.00
	101 to 200	0.50	0.75
	201 to 300	0.50	0.75
	301 to 800	0.35	0.50

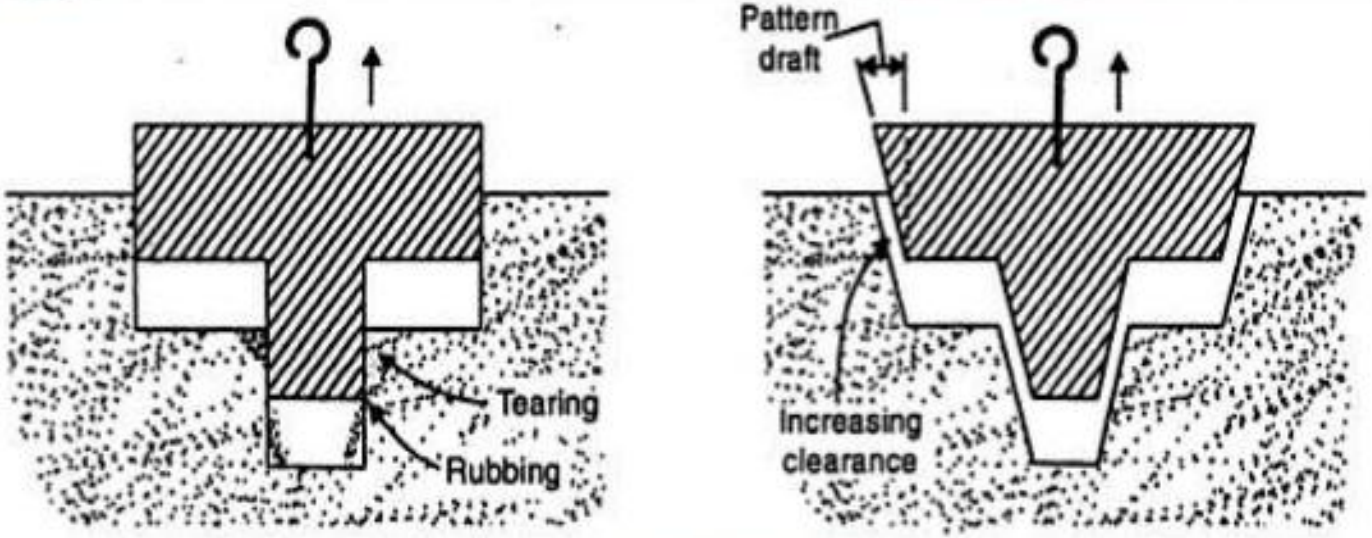

Fig. 2.9 *Draft Allowance.*

Fig: taper in design

4. Distortion or cambered allowance:

A casting will distort or wrap if :

i. It is of irregular shape,
ii. All it parts do not shrink uniformly i.e., some parts shrinks while others are restricted from during so,
iii. It is u or v-shape,
iv. The arms possess unequal thickness,
v. It has long, rangy arms as those of propeller strut for the ship,
vi. It is a long flat casting,
vii. One portion of the casting cools at a faster rate as compared to the other.

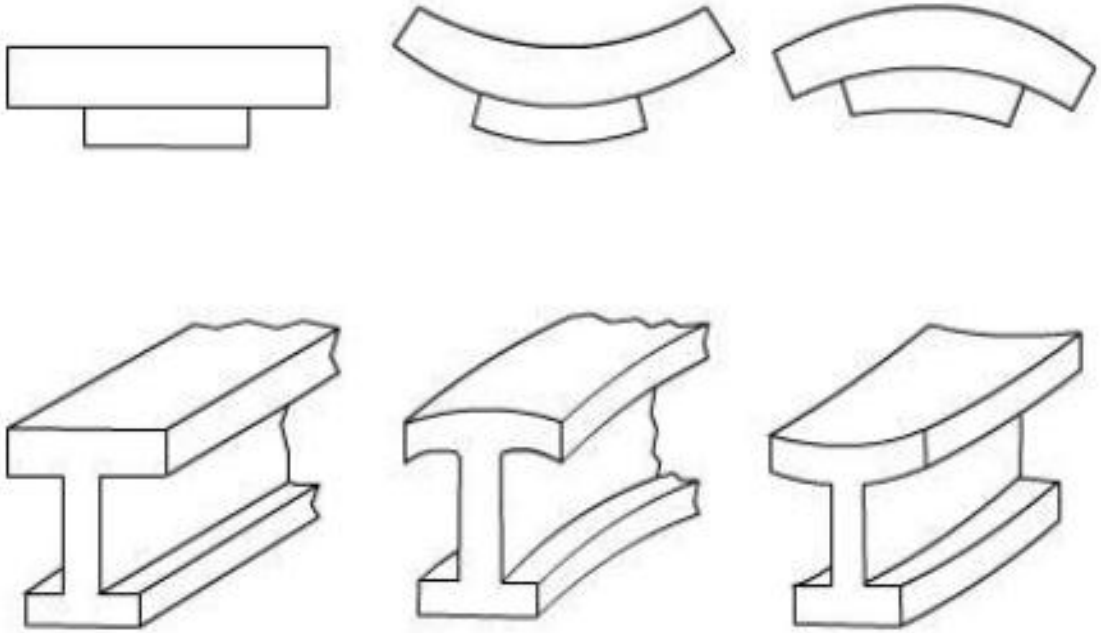

Required Shape of Casting

Distorted Casting

Cambered Pattern

(a) *U-shaped Casting*

(i) Required shape of casting
(ii) Casting produced with distortion
(iii) Pattern provided with Camber allowance

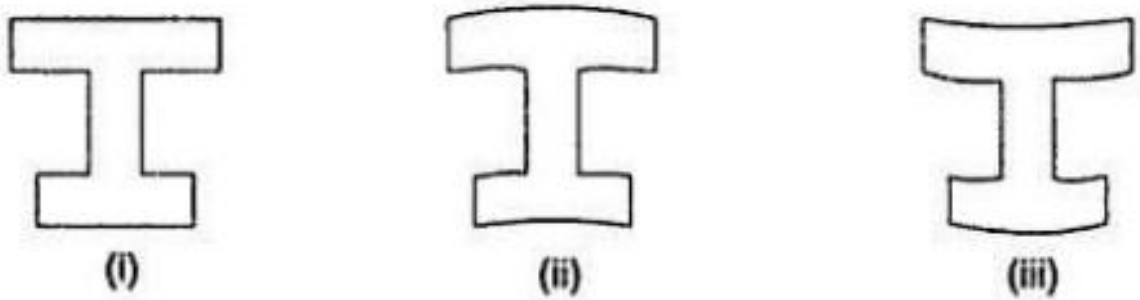

(b) *I-section Casting*

5. Shake allowance:

- A patter is shaken or rapped by striking the same with a wooden piece from side to side. This is done so that the pattern a little is loosened in the mold cavity and can be easily removed.
- In turn, therefore, rapping enlarges the mould cavity which results in a bigger sized casting.
- Hence, a –ve allowance is provided on the pattern i.e., the pattern dimensions are kept smaller in order to compensate the enlargement of mould cavity due to rapping.
- The magnitude of shake allowance can be reduced by increasing the tapper.

PATTERN LAYOUT
AND
PATTERN CONSTRUCTION

Pattern Layout:

Steps involved:

- Get the working drawing of the part for which the pattern is to be made.
- Make two views of the part drawing on a sheet, using a *shrink rule*. A shrink rule is modified form of an ordinary scale which has already taken care of shrinkage allowance for a particular metal to be cast.
- Add machining allowances as per the requirements.
- Depending upon the method of molding, provide the draft allowance.

Pattern Construction:

- Study the pattern layout carefully and establish,
  a. Location of parting surface.
  b. No. of parts in which the pattern will be made.
- Using the various hand tools and pattern making machines fabricate the different parts of the pattern.
- Inspect the pattern as regards the alignment of different portions of the pattern and its dimensional accuracy.
- Fill wax in all the fillets in order to remove sharp corners.
- Give a shellac coatings(3 coats) to pattern.
- impart suitable colors to the pattern for identification purposes and for other informations.

PATTERN COLORS

Pattern Colors:

Patterns are imparted certain colors and shades in order to:

i. Identify quickly the main body of pattern and different parts of the pattern.
ii. Indicate the type of the metal to be cast.
iii. Identify core prints, loose pieces, etc.,
iv. Visualize the surfaces to be machined, etc.

the patterns are normally painted with contrasting colors such that the mould maker would be able to understand the functions clearly.

The color code used is,

1. Red or orange on surface not to be finished and left as cast
2. Yellow on surfaces to be machined
3. Black on core prints for unmachined openings
4. Yellow stripes on black on core prints for machinsed openings
5. Green on seats of and for loose pieces and loose core prints
6. Diagonal black strips with clear varnish on to strengthen the weak patterns or to shorten a casting.

MOLDING SAND

- Molding sand are the most commonly used for making all types of molds irrespective of whether they are used for producing casting of ferrous or non-ferrous metal
- Most sand casting operations are used silica sand.
- Sand used to manufacture a mould for casting process is held by mixture of water and clay.
- A typical mixture by volume could be 89% sand,4% water and 7% clay.

CHARACTERISTIC OF MOLDING SAND

- Molding sands are refractory in nature and can withstand temperature of metal being poured without fusing.
- The molding sand do not chemically react with molten metal.
- The sand have high degree of permeability and thus allow gases formed during pouring to escape.
- These strength , permeability and hardness of the sand mix can be varied by changing the structure of sand .

TYPES OF MOLDING SAND

1. **Green sand:**

- It is sand used in the wet condition for making the mould. It is mixture of silica sand with 15-25 per cent clay and 6-8 per cent water
- As explained earlier green sand moulds are not dried and metal is poured in them in the wet condition
- Being damp the sand can be easily worked with hand to give it any desired shape
- This sand is used for producing small to medium sized moulds which are not very complex

GREEN SAND

2. Dry sand:

- Dry sand is the green sand that has been dried or baked after preparing the mould.
- Drying sand gives strength to the mould so that it can be used for larger castings

3. Loam sand:

- Loam sand is sand containing up to 50 % clay which has been worked to the consistency of builder mortar.
- This sand is used for loam sand moulds for making very heavy castings usually with the help of sweeps and skeleton patterns

4. Parting sand:

- This sand is used during making of the mould to ensure that green sand does not stick to the pattern and the cope and drug parts can be easily separated for removing the pattern without causing any damage to the mould.
- Parting sand consists of fine grained clay free dried silica sand, sea sand or burnt sand with some parting compounds.
- The parting compounds used include charcoal, ground bone and limestone, groundnut shells, talc and calcium phosphate.

PARTING SAND

5. Facing sand:

- Facing sand is the sand which covers the pattern all around it. The remaining box is filled with ordinary floor sand.
- Facing sand forms the face of the mould and comes in direct contact with the molten metal when it is poured.
- High strength and refractoriness are required for this sand.
- It is made of silica sand and clay without the addition of any used sand.
- Graphite, mollasses etc. may be added to the facing sand. Thickness of the sand layer varies from 20 to 30 mm

FACING SAND

6. Backing sand:

- Backing sand is the bulk of the sand used to back up the facing sand and to fill up the volume of the flask.
- It consists mainly of old, repeatedly used molding sand which is generally black in color due to addition of coal dust and burning on contact with hot metal.
- Because of the color backing sand is also sometimes called black sand.
- The main purpose for the use of backing sand is to reduce the cost of molding.

BACKING SAND

7. System sand:

- This is the sand used in mechanized foundries for filling the entire flask.
- No separate facing sand is used in a mechanized foundry.
- Sand, cleaned and reactivated by the addition of water and binders is used to fill the flask. Because of the absence of any fresh sand, system sand must have more strength, permeability and refractoriness compared to backing sand

SYSTEM SAND

8. Core sand:

- Core sand is the sand used for making cores. This is silica sand mixed with core oil. That is why it is also called oil sand.
- The core oil consists of linseed oil, resin, light mineral oil with some binders.
- For larger cores, sometimes pitch or flour and water may also be used to save on cost.

PROPERTIES OF MOLDING SAND

- Strength

1. GREEN STRENGTH:

- Adequate strength and toughness for making and handling the mold.

2. DRY STRENGTH:

- Dry sand must have strength to resist erosion and also the mettalo static pressure of the molten metal or else the mold may enlarge.

3. HOT STRENGTH:

- Hot molten metal
- Metalloid static pressure of the liquid metal bearing against the mold walls may cause mold enlargement, or if the metal is still flowing, erosion, cracks, or breakages may occur unless the sand posses adequate hot strength.

- **PERMEABILITY:**
  - Steam and other gases
  - The mold must be permeable, i.e. , porous to permit the gases to escape.
- **THERMAL STABILITY:**
  - Heat from the casting causes rapid expansion of the sand surface at the mold-metal interface.
  - The mold surface may crack, buckle, or flake off (scab) unless the molding sand is relatively stable dimensionally under rapid heating.
- **REFRACTORINESS:**
  - The absence of melting, softening, or adherence of the sand to the casting makes for better casting surface and easier cleaning of the casting.

- **FLOWABILITY:**
  - The sand should pack well/flow under load.
  - Sands of low flowability may result in non-uniform hardness.
  - Soft molds --- enlargement of the casting or roughness of the casting surfaces.
- **COLLAPSIBILITY:**
  - The molding sand should also have collapsibility so that during the contraction of the solidified casting it does not provide any resistance, which may result in cracks in the castings.
  - Besides these specific properties the molding material should be cheap, reusable and should have good thermal conductivity

- **Adhesiveness**
  - The molding sand should collapse during the contraction of the solidified casting it does not provide any resistance, which may result in cracks in the castings.
  - Besides these specific properties the molding material should be cheap, reusable and should have good thermal conductivity
- **Cohesiveness**
  - It is the property of sand due to which the sand grains stick together during ramming. It is defined as the strength of the molding sand

- **Reusability:**
  - Since large quantities of sand are used in a foundry it is very important that the sand be reusable otherwise apart from cost it will create disposal problems
- **Easy of preparation and control:**
  - Sand should lend itself to easy preparation and control by mechanical equipment.
- **Conductivity:**
  - Sand should have enough conductivity to permit removal of heat from the castings.

INGREDIENTS OF MOLDING SANDS

Molding sands are actually mixtures of three or more ingredients. Green sand -- clay, water, sand (SiO_2).

Also a number of other ingredients/materials are added.

- **SAND:** Molding sand contains 50 to 95 % of the total material in a molding sand. These sand particles may differ in the following ways:
- Average grain size, grain size distribution and grain shape.
- Chemical composition.
- Refractoriness and thermal stability.

- Generally the purest silica sand, 99.8+ percent SiO_2 is considered the most refractory and thermally stable.
- Excessive amounts of iron oxide, alkali oxides and lime can cause objectionable lowering of the fusion point in some sands.
- The shape of sand grains may be rounded, angular, or sub-angular depending on their geologic history.

- **Clay**: 2 to 50 percent
- With a suitable water content, it is the principal source of the strength and plasticity of the molding sand.
- Binder
- Natural molding sand ------- sand + clay in minerals
- Synthetic molding sands

- "Essentially aggregates of extremely minute crystalline, usually flake-shaped particles that can be classified on the basis of their structure and composition into a few groups which are known as clay minerals.
- Single clay minerals
- Mixtures of clay minerals
- Clay minerals : bentonites, fire clays (kaolinites) and special clays (halloysite, illite)

- **Water:** 1.5 to 8 percent
- Activate the clay ---------- develop plasticity and strength.
- Water in molding sand is often referred as "tempering" water.
- Water in excess -------- free water
- The rigid clay coatings of the sand grains may be forced together ---------- develop strength.
- Free water ----- lubricant --- makes the sand more plastic and more moldable though the strength may be lowered.
- Control of water in sand (clay) is very important.

SPECIAL ADDITIVES

- **Cereals:** finely ground corn flour or gelatinized and ground starch from corn.

  0.25 to 2.00 percent

  Increase green or dry strength and collapsibility.
- **Ground Pitch:** by-product of coke making.

  up to 2.0 percent

  improve hot strength and casting finish on ferrous castings
- **Sea Coal:** 2 to 8 percent.

  A finally ground soft coal.

  Grey and malleable iron molding sands.

  Improve the surface finish & Improve ease of cleaning the castings.
- **Gilsonite:** About 0.4 to 0.8 percent.

  A mineral

  Improve casting finish
- **Fuel Oil:** A little fuel oil is sometimes used as a replacement for a small percentage of water, thus lowering the total percentage of moisture present .

SPECIAL ADDITIVES

Wood Flour: 0.5 to 2.0 percent

Enhance thermal stability.

Control the expansion of sand by burning out at elevated temperature

Silica Flour: Pulverized silica, finer than 200 mesh, is called silica flour.

Up to 35 percent

Increase hot strength

Iron Oxide: 0.25 to 1.0 percent

To obtain added hot strength.

Perlite: An aluminum silicate mineral

0.5 to 1.5 percent

Better thermal stability of the sand

Riser insulator

Molasses, Dextrin: Cane or blackstrap molasses, unrefined, and containing 60 to 70 percent sugar solids, may be used for increased dry strength.

Dextrins may also be used for the same purpose

PROPERTIES OF GREEN SANDS

Properties depends on several factors.

i) The sand ingredients.

ii) The methods of preparing the sand for molding.

iii) The method of molding employed in using the sand.

iv) Variables related to the casting such as weight, shape, kind of casting alloy and gating design.

Effect of the ingredients:

- Each of the ingredients can have important effects on the properties. Principal ingredient ----- Silica Sand Grains
- **Effects of the Sand Grains:**
- Casting surface finish, mold permeability, sand strength, refractoriness, and expansion characteristics are all influenced by the sand grain portion of the mixture.
- Sand-grain contour of the mold cavity.
- Fine grains ------ smooth wall at the metal interface.

- **Sand grains and permeability**:

  Coarser sand ---- greater permeability

  Finer sand ---- lower permeability The grain size distribution has a pronounced effect on permeability.

- **Sand grains and strength:**

  Strength ---------- surface area of sand grains available for binding.

  Fine sands present more surface area and can develop high strength, but of course more clay is required.

  Wide size distributions favor strength, while narrow distributions reduce strength.

  Angular sand grains ----- more strength.

- **Sand grains and refractoriness:** High refractoriness --sand grains of maximum purity and size.

  Impurities which discolor silica lower its fusion point. Finer grains appear to be more easily fused than coarser ones.

- **Sand grains and Expansion:**

  Wide size distribution --- dense packing of the grains --- cause expansion problems.

  Fine sands also expands more.

- **Effects of Clay:** *Water is necessary to activate the clay.*

Clay and Sand Strength: For a given clay type and content, there is an optimum water content.

The effects of the clay on dry and hot strengths are quite important.

Too low a dry strength permits washing of the sand by the metal, and dirt in the castings.

Too low or too high a hot strength is also undesirable.

Clay Content and Permeability: Permeability is reduced by fine material in the sand.

Increasing clay content ------ lowers permeability.

Higher clay content also require more tempering water, and hence more steam is formed when the metal is poured .

Clay Content & Bulk Density: Clay content also influences the bulk density achieved by the sand during ramming.

A sand having minimum bulk density has much void space and will have a good permeability commensurate with its sand grain characteristics.

Clay Content & Expansion:

Clay content of 10 to 14 per cent in the sand mixture are accompanied by minimum confined-expansion value, 0.03 to 0.04 in. per in. as measured at 2500 F.

High clay contents together with the proper amount of water and ramming of the sand thus favor thermal stability.

Clay Content & Other Properties:

High hot and dry strengths are developed by bentonite and bentonite-fire clay mixtures ----- less collapsibility.

Combustible materials may be added to promote collapsibilty.

Excess clay ----- clay balls Good mixing is required.

- **Effects of water:** Close control of the moisture content of molding sand.

  Optimum tempering water.

  Water causes ------- the clay to develop higher dry strength.

  The bonding action is attributed to adsorbed water rigidly held by the clay.

  With its adsorbed water, the clay coatings on the sand grains can be wedged together if sufficient force (ramming) is applied.

  Free water, un-adsorbed, can lubricate the coated sand grains and permit a greater bulk density to be reached.

CORE MAKING IN THE PROCESS OF CASTING

INTRODUCTION

A core is a device used in casting process to produce internal cavities and reentrant angles. The core is normally a disposable item that is destroyed to get it out of the piece. They are most commonly used in sand casting.

CORE BOX

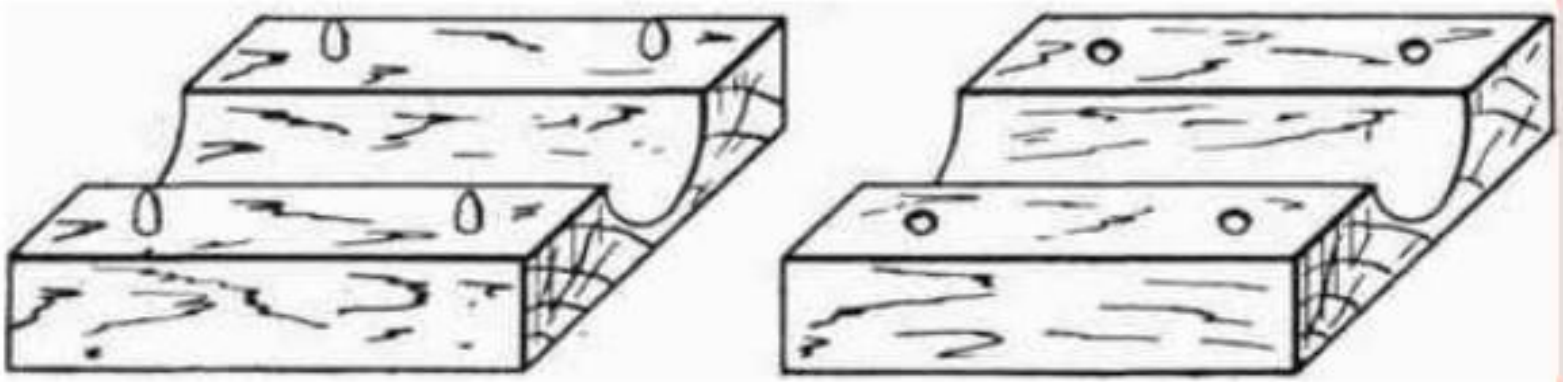

TYPES OF CORE BOXES

Half core box: When the shape of the core required is such that it can be prepared in identical halves, a half core box should be used.

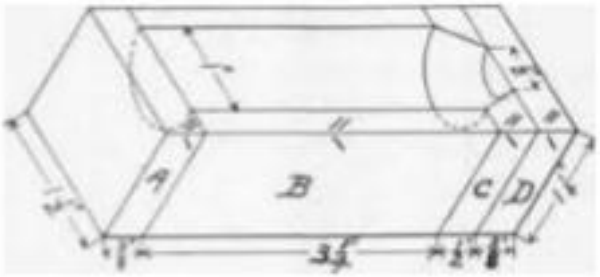

Dump core box : If the core produced by the core box does not require any pasting and is complete in it, the box designed is referred to as a dump core box.

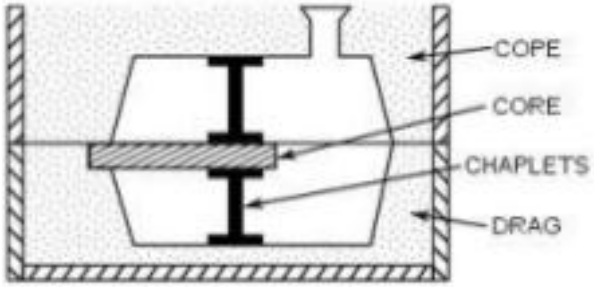

Split core box: When the core box is in two parts and complete cores results in single ramming, the box is split core box. For alignment of two parts, dowel pins are fixed in one part and corresponding holes are made in the other.

- Left and right core box: When the core is required in two parts and they are not identical, two different core boxes of the half core type have to be provided for each part of the core. Such boxes are called right handed and left handed core boxes.

Strickle core box: This is used when the core is required to have an irregular shape, which cannot be rammed by other methods. In this case, the desired irregular shape is achieved by striking off the core sand from the top of the core box with a piece of wood called strickle board. The strickle is cut to correspond exactly to the contour of the required core.

Loose piece core box: In case where two parts of the core are not identical they can be prepared from a single core box with the help of loose pieces. One part of the core is processed by placing the loose piece in the left-hand recess, and the other part by shifting the loose piece to the right-hand recess

CORE MAKING PROCESES

In Hinduja Foundries, they are using three processes. They are

1. Cold box process
2. Carbon dioxide (CO_2) core making process
3. Shell process

COLD BOX PROCESS

Cold box machine

Part A- Polyol- Phenolic formaldehyde resin

The usage amount of this binder varies with season.

0.8 to 1.2 %(summer season)

1.0 to 1.2 %(winter season)

Part B- Polyisocyanate

The usage amount of this binder also varies season.

0.8 to 1.2 %(summer season)

1.0 to 1.2 %(winter season)

Part C

The part C is AMINE gas which is used to harden core.

Gas time 4 to 15 sec (20 sec maximum)

Initially part A and part B both are mixed with the sand itself and this is used to fill core box and packed tightly. The Amine gas is introduced to harden the core

SODIUM SILICATE/CO2 CORE MAKING:

Sodium silicate core-making process

- In this process, liquid sodium silicate is mixed with the sand. The sand is rammed into a core box and cured by passing CO2 through the core.

The core should be between 25ºC to 30ºC (75ºF to 85ºF).

SHELL CORE MAKING PROCESS

Shell core making process

The shell core making process uses silica sand mixed with a thermo plastic resin. This mixture is shot into a heated metal core which is heated to a temperature of about 230c. Shell moulds are made in halves which are then glued or clipped together. The shell thickness is dependent on the amount of time the sand is in contact with the heated core box.

Important Moulding Sand Test

1. Moisture Content test
2. Clay content test
3. Grain Fineness test
4. Permeability test
5. Compactability test
6. Strength test

(a) Green Compressive strength
(b) Green Shear Strength
(c) Dry Compressive strength
(7) Hardness

Moisture Content test:

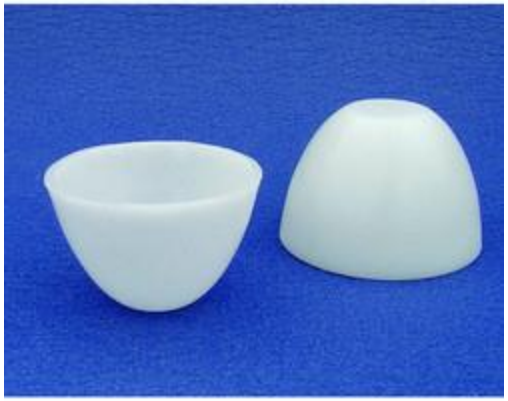

1. Place 20 to 50 gms of prepared sand in the pan and heat it in a oven for 2 to 3 minutes.
2. The moisture in the moulding sand is thus evaporated
3. Moulding sand is taken out of the pan and weighted again
4. The percentage of moisture can be calculated by different of weight.
5. % of Moisture = $(W_1-W_2)X100/W_1$

Where W_1 = Weight of the sand before dry

W_2= Weight of the sand after dry

Rapid Moisture Teller:

When calcium carbide comes in contact with moisture, acetylene gas is generated . This principle is used in the Rapid moisture Teller

A weighted quantity of sand is mixed with a fixed quantity of calcium carbide reagent and the whole mixture is thoroughly shaken in a vessel to which a pressure gauge is fixed.

The acetylene gas produced develops pressure. The Instrument indicates moisture on the pressure gauge.

Clay Content Test (Total Clay)

1. Separate 50 gms of dry moulding sand transfer to wash bottle.
2. Add 475 cc of distilled water + 25cc of a 3% NaOH
3. Agitate this mixture for 10 min with the help of sand Stirrer.
4. Fill the wash bottle with water upto marker.
5. After the sand etc has settled down the water Siphon from the wash bottle.
6. Dry the sand settled down

Now the % of clay content can be calculated

% of clay content = $(W_1-W_2)X100/W_1$

W_1 = Weight of the sand before test

W_2 = Weight of the sand after test.

shutterstock.com • 51530119

Clay content test (Active clay)

- Methylene Blue Test

Methylene blue is a heterocyclic aromatic chemical compound with molecular formula $C_{16}H_{18}N_3SCl$

Methylene blue is a potens Cationic dye.

Steps:

1. Calibrate the Methylene-clay system (No. of ml of methylene blue required for each percent of bentonite or clay)
2. Take 5 gm of sand in a stainless steel container
3. Add 50 ml of 2% tetrasodium pyrophosphate solution via pipette
4. Disperse the sand particles using an ultrasonic acessary

s the apparatus used for the me
test in which we will be finding

5. Slowly fill the vessal with Methylene blue from burette and stir the system.
6. Using a glass rod, remove a single drop of the liquid and place it on filter paper. watch for the formation of a blue green halo around the central spot.
7. Increase the addition of Methylene blue drop by drop till blue-green halo appears.
8. Calculate the amount of Methylene blue consumed
9. Using the calibration factor, determine the clay content of the sand

Grain Fineness Test

- Place the sample of dry sand (Clay removed sand) in the upper sieve
- Vibrate the Sieve shaker for a definite period.
- Weigh the amount of sand retained on each sieve
- Compute the percentage distribution of grains.

A sample of 50 gms of moulding sand was sieved through a sieve shaker. The quantities of sand collected in different sieve were recorded. Determine AFS grain fineness number(GFN) of the said sand

US Sieve Serial no	Sand retained On each sieve(gm)	% of sand retain (A)	Multiple factor (B)	Product (AXB)
6	none	0.0	3	0
12	none	0.0	5	0
20	none	0.0	10	0
30	none	0.0	20	0
40	0.20	0.40	30	12
50	0.65	1.3	40	52
70	1.20	2.4	50	120
100	2.25	4.5	70	315
140	8.55	17.1	100	1710
200	11.05	22.1	140	3094
270	10.90	21.8	200	4360
PAN	9.30	18.6	300	5580

GFN =Sum of products/Sum of % weight of sand retained
= 15243/88.2 =172.8 ≈ 173

Permeability Test:

The quantity of air that will pass through a standard specimen of the sand at a particular pressure condition is called the permeability of the sand

Major part of Permeability test equipment

1. An inverted bell Jar, which floats in a water
2. Specimen tube (for holding the sand specimen)
3. Manometer (for measuring the air pressure)

Step involved;

1. The air (2000 cc volume) held in the bell jar is forced to pass through the sand specimen
2. At this time, air entering the specimen is equal to the air escaped through the specimen
3. Take the pressure reading in the manometer
4. Note the time required for 2000 cc of air to pass the specimen

Permeability number (N) = VH/APT

Where, V = Volume of air (cc)

H= Height of the Specimen (cm)

A = Area of the Specimen (cm^2)

P = Air pressure (gm/cm^2)

T = Time taken by the air to pass through the sand Specimen (Sec)

- Determine the permeability a AFS sandard sand specimen of 5.08 cm (2 inch) diameter and 5.08 cm in height. The air drum was raised to take 2000 cm^3 of air into it. The whole air was then allowed to escape through the sand specimen at a pressure of 10g/cm^3 in a span of 15 sec.

Compactibility:

The compactibility indicates the water tempering degree of the green sand moulding Compactibility is the percentage decrease in height of a loose mass of sand under the influence of a controlled compaction

Green Compression Strength:
Green Compression Strength indicates the load bearing capacity of the mould in the presence of moisture

Green Shear strength:
Green Shear strength indicates the strength indicates the strength of the mould during the removal of pattern or while the core in the mould

Universal sand strength Testing Machine

Specimen pads used for shear strength measurement

Hardness: Hardness indicates the resistance of the mould to plastic deformation

Mould hardness Tester

Binder:

1.Ingredient which hold the sand each other by making bond
2. It should retain it property till the solidification is complete
3. When the solidification complete its losses its property

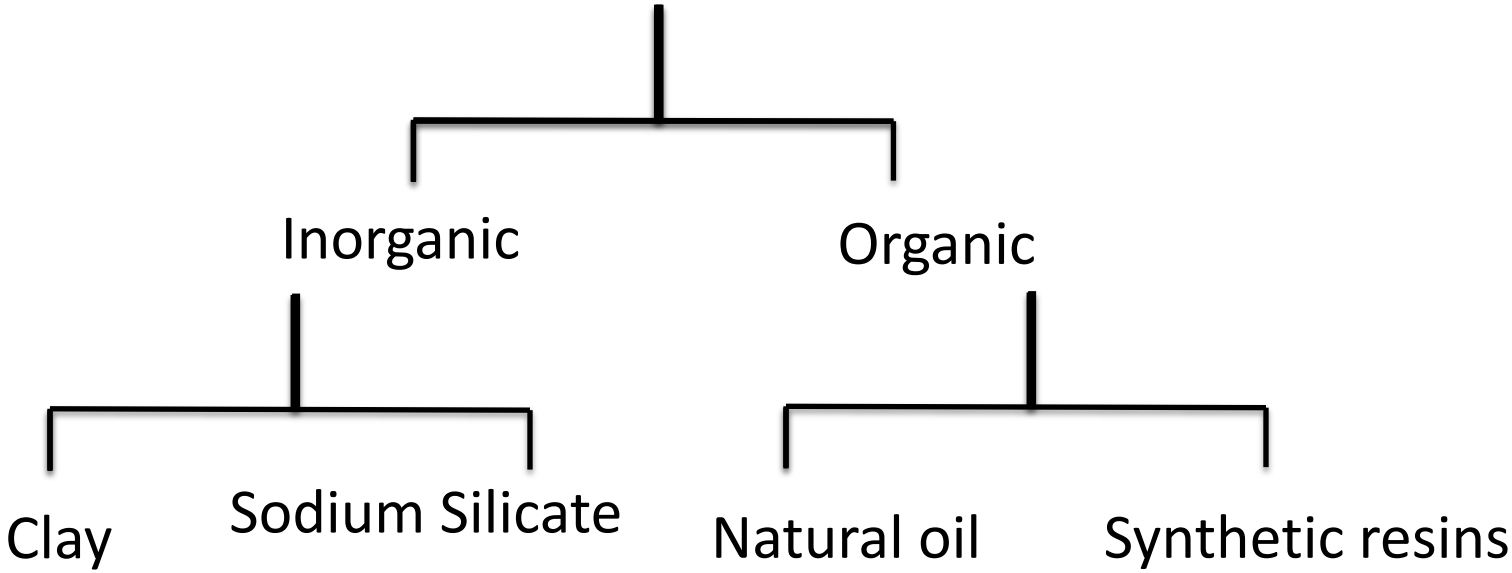

Sodium silicate: SiO_2, Na_2O, H_2O

Weight Ratio	Typical analysis %weight			Sp gr at 20^0C	Viscosity at 20^0C (Centipoise)
SiO_2/Na_2O	Na_2O	SiO_2	H_2O		
2	17.8	35.7	46.6	1.7	90000
2	16.6	33.2	50.2	1.625	4500
2	15.2	30.4	54.4	1.56	850
2	14.0	28.1	57.9	1.5	200
2.2	13.2	29.2	57.6	1.5	220
2.4	12.7	30.8	56.5	1.5	310
2.9	9.2	26.8	64.0	1.375	100

For foundry use: Ratio: 2-2.4 and water content around 50%

Important facts about sodium silicate

(a) Higher the SiO_2/Na_2O ratio for a given solids content the greater of the viscosity. The rise being very rapid with higher percent of solid.

(b) Higher the viscosity lower the coating ability and hence higher ratio silicates content lower solid percent and higher H_2O percent than lower silicate

(c) Solution below 2.8 ratio are alkaline and above this the solution neutral.

(d) Silicate with ratio less than ‘2’ don’t harden quickly enough to be of foundry use.

Mechanism of hardening in CO_2 Process

- In CO_2 process the over all hardening is effected by three things:

(a) Chemical gelation

(b) Physical dehydration during gassing

(c) Physical dehydration during storage due to loss of water molecules.

Chemical gelation:

$$SiO_2 + H_2O + Na_2O + CO_2 \longrightarrow H_2CO_3 + Na_2O + SiO_2$$

$$SiO_2 + H_2O + Na_2O + H_2CO_3 \longrightarrow Na_2CO_3 + SiO_2,2H_2O$$

$\downarrow$

Slica hydrogel
(Bonding Material)

Physical dehyration: SiO_2 Na_2O H_2O

This bond is stronger than the silica hydrogel. This is because the drying up of silica hydrogel.will result in formation of micro cracks. Aim should be to get minimum of silica gel bond and maximum of sodaglass bond.

High flow rate : Physical dehydration
Low flow rate: Chemical gelation

Over gassing:

This is the result of very low gas flow rates over a particular period of time producing high quantity of silica hydrogel as these conditions give sufficient time for CO_2 to dissolve in water of sodium silicate. The weak silica hydrogel bond will then dry out due to prolong gassing of on standing giving a friable surface. Sodium carbonate produce the weakness

Under gassing:

High flow rate short time

These condition occur in the early stage of gassing after the first silica hydrogel layer has been formed and before silicate glass has been formed.
Any mould or core strip in this condition would develop very high strength on standing since only little amount of silica hydrogel has been formed and there is much more sodium silicate left for conversion to strong silicate glass bond

Choice for Foundryman:

(a) For immediate use gassing should take place at high flow rate for long time to produce maximum of strong silicate glass

(b) For use in period upto one week after making gassing should be at low flow rates for short time to give low as gas strength with very little or no silicate glass bond, which on storing will develop high strength, due to physical dehydration on drying producing silicate glass bond.

Silica hydrogel is formed which is sufficient to strip the pattern from the mould.

Ingredient of CO_2 Process;

Sand- Clay free dry silica sand

SiO_2/Na_2O ratio – 2: 1

Sodium silicate-3-5%

Mixing -3 min

Normal 1 kg of sodium silicate will required about 0.5 - 0.75 kg of CO_2 gas will passed.

Advantage of CO_2 Process:

(a) Much more rigid and stronger moulds and core can be made
(b) High flowability so give better compaction of moulds and cores
(c) Casting produce have better dimensional accuracy
(d) Less friable hence lesser sand inclusion
(e) Lesser gas defect
(f) Faster production
(g) Suitable for jobbing and mass production
(h) Lesser in skill required
(i) process can be automatic

Disadvantage of CO_2 Process:

(a) Poor breakdown (Collapsibility)
(b) Shorter bench life
(c) Higher cost of sand reclamation
(d) Special patterns required

TYPES OF CASTING

1. Investment Casting (Lost Wax Process)

A pattern made of wax is coated with a refractory material to make mold, after which wax is melted away prior to pouring molten metal

- "Investment" comes from a less familiar definition of "invest" - "to cover completely," which refers to coating of refractory material around wax pattern
- It is a precision casting process - capable of producing castings of high accuracy and intricate detail

Processes:

1. ***Produce a master pattern:***
2. ***Mould making:***
3. ***Produce the wax patterns:***
4. ***Assemble the wax patterns:***
5. ***Investment:***
6. ***De wax:***
7. ***Burnout & preheating:***
8. ***Pouring:***
9. ***Removal:***

Mould making:

- A mould, known as the *master die*, is made of the master pattern. The master pattern may be made from a low-melting-point metal, steel, or wood. If a steel pattern was created then a low-melting-point metal may be cast directly from the master pattern. Rubber moulds can also be cast directly from the master pattern. The first step may also be skipped if the master die is machined directly into steel.

Produce the wax patterns:

- Although called a *wax pattern*, pattern materials also include plastic and frozen mercury. Wax patterns may be produced in one of two ways. In one process the wax is poured into the mold and swished around until an even coating, usually about 3 mm (0.12 in) thick, covers the inner surface of the mould. This is repeated until the desired thickness is reached. Another method is filling the entire mould with molten wax, and let it cool, until a desired thickness has set on the surface of the mould. After this the rest of the wax is poured out again, the mould is turned upside down and the wax layer is left to cool and harden. With this method it is more difficult to control the overall thickness of the wax layer

Assemble the wax patterns:

- The wax pattern is then removed from the mould. Depending on the application multiple wax patterns may be created so that they can all be cast at once. In other applications, multiple different wax patterns may be created and then assembled into one complex pattern. In the first case the multiple patterns are attached to a wax sprue, with the result known as a **pattern cluster, or *tree***; as many as several hundred patterns may be assembled into a tree. Foundries often use registration marks to indicate exactly where they go. The wax patterns are attached to the sprue or each other by means of a heated metal tool. The wax pattern may also be *chased*, which means the parting line or flashing are rubbed out using the heated metal tool. Finally it is *dressed*, which means any other imperfections are addressed so that the wax now looks like the finished piece.

Investment Casting

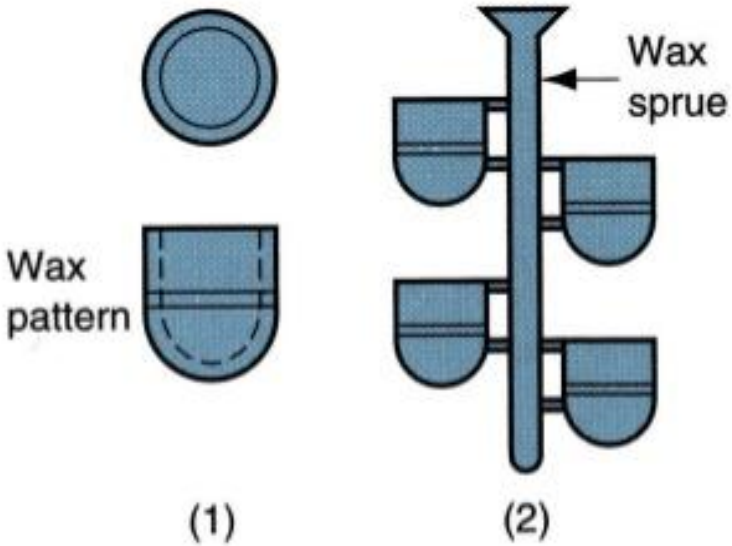

Figure 2 Steps in investment casting: (1) wax patterns are produced, (2) several patterns are attached to a sprue to form a pattern tree

Investment:

- The ceramic mould, known as the *investment*, is produced by three repeating steps: coating, stuccoing, and hardening. The first step involves dipping the cluster into a slurry of fine refractory material and then letting any excess drain off, so a uniform surface is produced. This fine material is used first to give a smooth surface finish and reproduce fine details. In the second step, the cluster is *stuccoed* with a coarse ceramic particle, by dipping it into a fluidised bed, placing it in a rainfall-sander, or by applying by hand. Finally, the coating is allowed to harden. These steps are repeated until the investment is the required thickness, which is usually 5 to 15 mm

Investment Casting

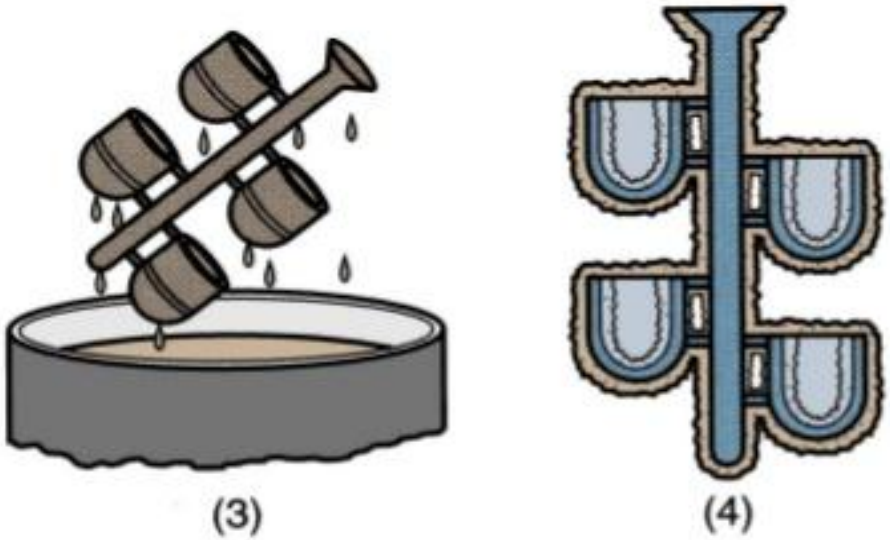

Figure 3 Steps in investment casting: (3) the pattern tree is coated with a thin layer of refractory material, (4) the full mold is formed by covering the coated tree with sufficient refractory material to make it rigid

De wax:

- The investment is then allowed to completely dry, which can take 16 to 48 hours. Drying can be enhanced by applying a vacuum or minimizing the environmental humidity. It is then turned upside-down and placed in a furnace or autoclave to melt out and/or vaporize the wax. Most shell failures occur at this point because the waxes used have a thermal expansion coefficient that is much greater than the investment material surrounding it, so as the wax is heated it expands and induces great stresses. In order to minimize these stresses the wax is heated as rapidly as possible so that the surface of the wax can melt into the surface of the investment or run out of the mold, which makes room for the rest of the wax to expand. In certain situations holes may be drilled into the mold beforehand to help reduce these stresses. Any wax that runs out of the mold is usually recovered and reused.

Burnout & preheating:

- The mold is then subjected to a *burnout*, which heats the mold between **870 C & 1095 C** to remove any moisture and residual wax, and to sinter the mold. Sometimes this heating is also used as the preheat, but other times the mold is allowed to cool so that it can be tested. If any cracks are found they can be repaired with ceramic slurry or special cements. The mold is preheated to allow the metal to stay liquid longer to fill any details and to increase dimensional accuracy, because the mold and casting cool together

Pouring:

- The investment mold is then placed cup-upwards into a tub filled with sand. The metal may be gravity poured, but if there are thin sections in the mold it may be filled by applying positive air pressure, vacuum cast, tilt cast, pressure assisted pouring, or centrifugal cast

Pouring:

- The investment mold is then placed cup-upwards into a tub filled with sand. The metal may be gravity poured, but if there are thin sections in the mold it may be filled by applying positive air pressure, vacuum cast, tilt cast, pressure assisted pouring, or centrifugal cast

Investment Casting

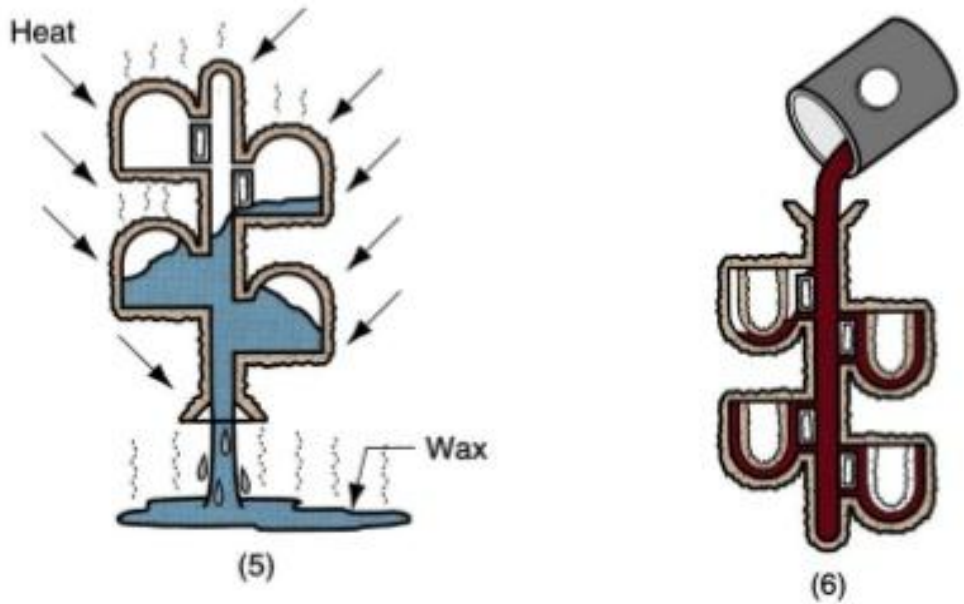

Figure 4 Steps in investment casting: (5) the mold is held in an inverted position and heated to melt the wax and permit it to drip out of the cavity, (6) the mold is preheated to a high temperature, the molten metal is poured, and it solidifies

Removal:

- The shell is hammered, media blasted, vibrated, waterjeted, or chemically dissolved (sometimes with liquid nitrogen) to release the casting. The sprue is cut off and recycled. The casting may then be cleaned up to remove signs of the casting process, usually by grinding

Investment Casting

(7)

Figure 5 Steps in investment casting: (7) the mold is broken away from the finished casting and the parts are separated from the sprue

Advantages and Disadvantages

- Advantages of investment casting:
  - Parts of great complexity and intricacy can be cast
  - Close dimensional control and good surface finish
  - Wax can usually be recovered for reuse
  - Additional machining is not normally required - this is a net shape process
- Disadvantages
  - Many processing steps are required
  - Relatively expensive process

2. Plaster Mold Casting

Similar to sand casting except mold is made of plaster of Paris (gypsum - $CaSO_4$-$2H_2O$)

- In mold-making, plaster and water mixture is poured over plastic or metal pattern and allowed to set
  - Wood patterns not generally used due to extended contact with water
- Plaster mixture readily flows around pattern, capturing its fine details and good surface finish

Advantages and Disadvantages

- Advantages of plaster mold casting:
  - Good accuracy and surface finish
  - Capability to make thin cross-sections
- Disadvantages:
  - Mold must be baked to remove moisture, which can cause problems in casting
  - Mold strength is lost if over-baked
  - Plaster molds cannot stand high temperatures, so limited to lower melting point alloys

3. Ceramic Mold Casting

Similar to plaster mold casting except that mold is made of refractory ceramic material that can withstand higher temperatures than plaster

- Can be used to cast steels, cast irons, and other high- temperature alloys
- Applications similar to those of plaster mold casting except for the metals cast
- Advantages (good accuracy and finish) also similar

4. Permanent Mold Casting

- Economic disadvantage of expendable mold casting: a new mold is required for every casting
- In permanent mold casting, the mold is reused many times
- The processes include:
  - Basic permanent mold casting
  - Die casting
  - Centrifugal casting

Permanent Mold Casting

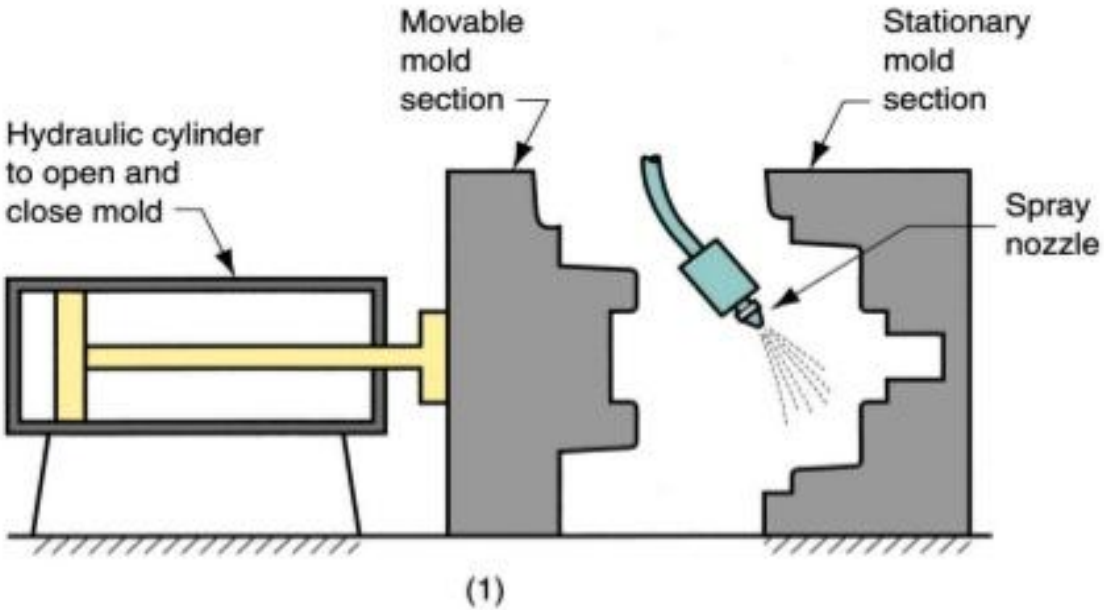

Figure 7 Steps in permanent mold casting: (1) mold is preheated and coated

Permanent Mold Casting

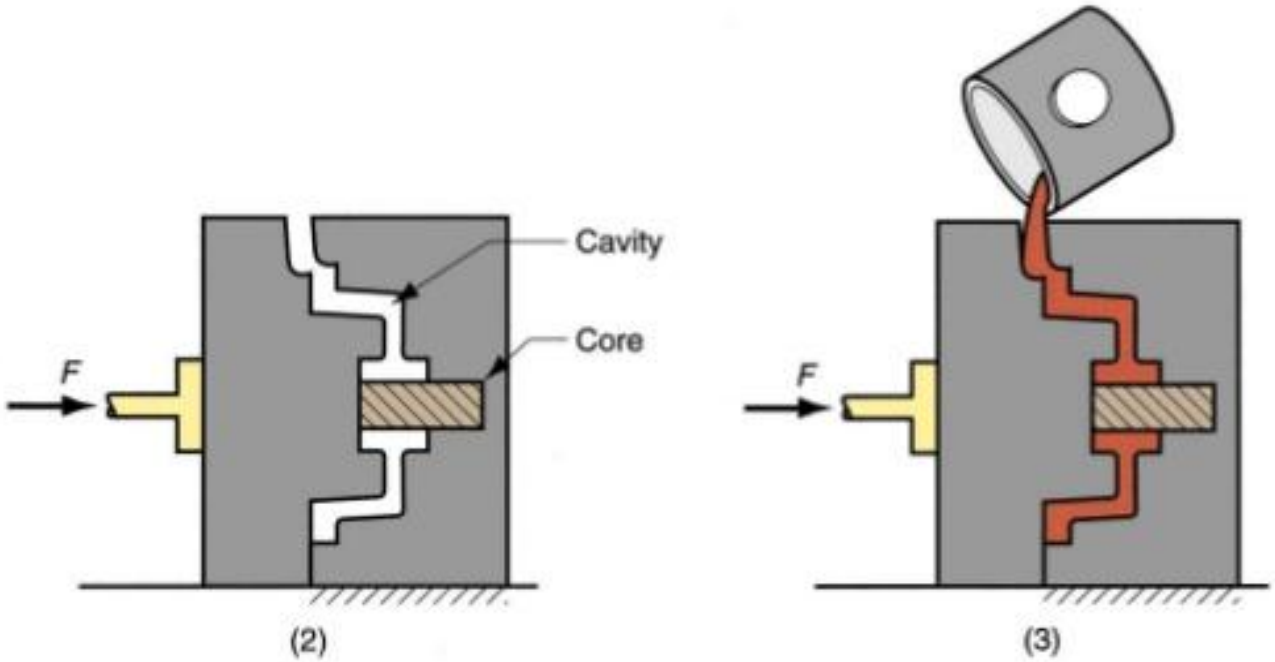

Figure 8 Steps in permanent mold casting: (2) cores (if used) are inserted and mold is closed, (3) molten metal is poured into the mold, where it solidifies.

Advantages and Limitations

- Advantages of permanent mold casting:
  - Good dimensional control and surface finish
  - More rapid solidification caused by the cold metal mold results in a finer grain structure, so castings are stronger
- Limitations:
  - Generally limited to metals of lower melting point
  - Simpler part geometries compared to sand casting because of need to open the mold
  - High cost of mold

Applications of Permanent Mold Casting

- Due to high mold cost, process is best suited to high volume production and can be automated accordingly
- Typical parts: automotive pistons, pump bodies, and certain castings for aircraft and missiles
- Metals commonly cast: aluminum, magnesium, copper-base alloys, and cast iron

5. Die Casting

A permanent mold casting process in which molten metal is injected into mold cavity under high pressure

- Pressure is maintained during solidification, then mold is opened and part is removed
- Molds in this casting operation are called *dies*; hence the name die casting
- Use of high pressure to force metal into die cavity is what distinguishes this from other permanent mold processes

Die Casting Machines

- Designed to hold and accurately close two mold halves and keep them closed while liquid metal is forced into cavity
- Two main types:
  1. Hot-chamber machine
  2. Cold-chamber machine

Hot-Chamber Die Casting

Metal is melted in a container, and a piston injects liquid metal under high pressure into the die

- High production rates - 500 parts per hour not uncommon
- Applications limited to low melting-point metals that do not chemically attack plunger and other mechanical components
- Casting metals: zinc, tin, lead, and magnesium

Hot-Chamber Die Casting

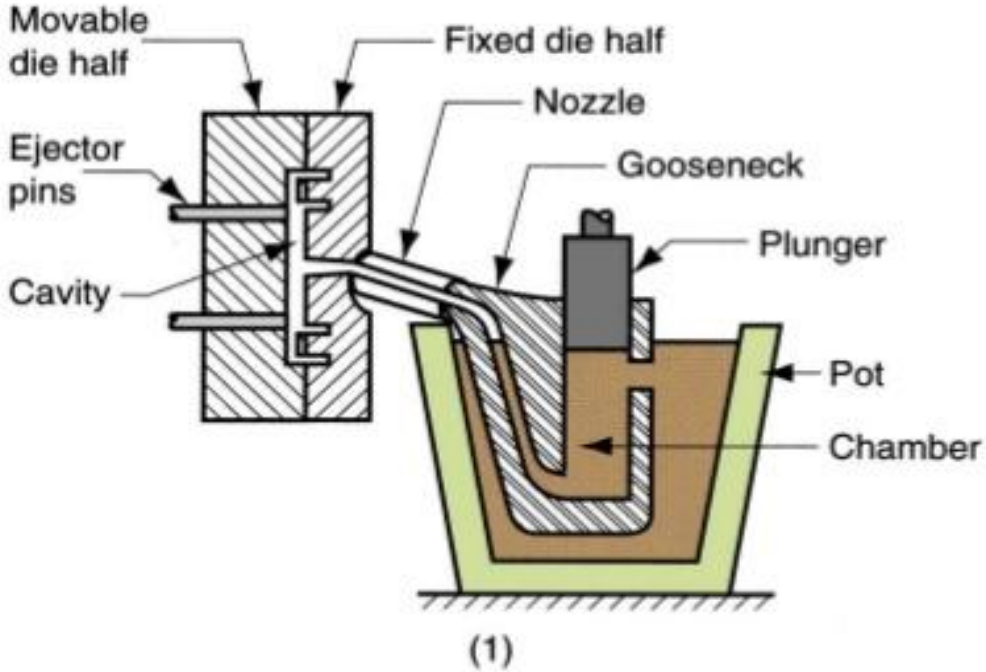

Figure 9 Cycle in hot-chamber casting: (1) with die closed and plunger withdrawn, molten metal flows into the chamber (2) plunger forces metal in chamber to flow into die, maintaining pressure during cooling and solidification.

Cold-Chamber Die Casting Machine

Molten metal is poured into unheated chamber from external melting container, and a piston injects metal under high pressure into die cavity

- High production but not usually as fast as hot-chamber machines because of pouring step
- Casting metals: aluminum, brass, and magnesium alloys
- Advantages of hot-chamber process favor its use on low melting-point alloys (zinc, tin, lead)

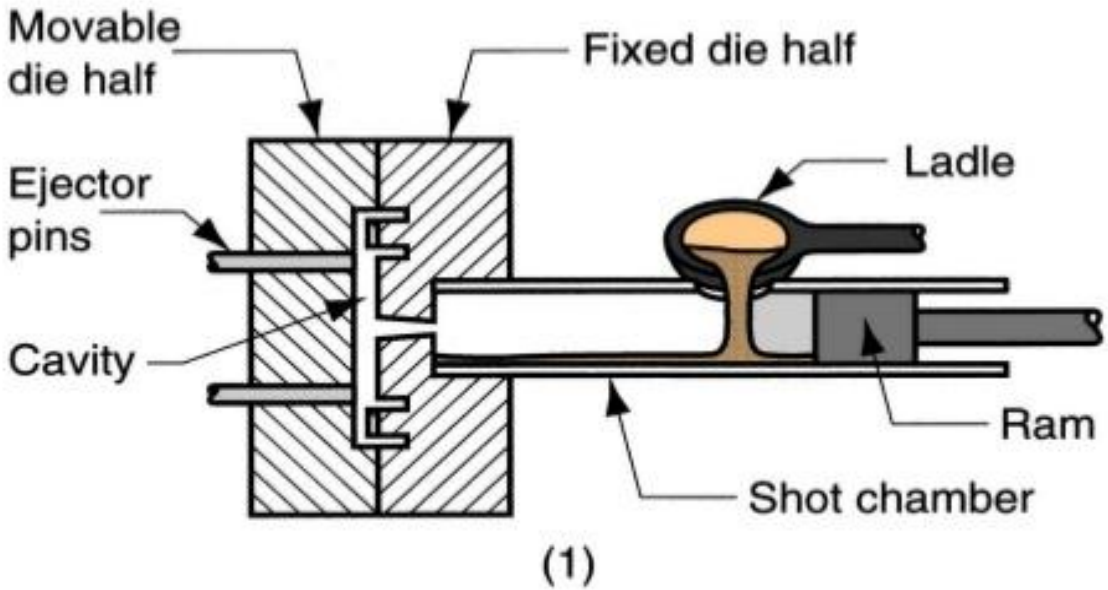

Figure 10 Cycle in cold-chamber casting : (1) with die closed and ram withdrawn, molten metal is poured

Cold-Chamber Die Casting

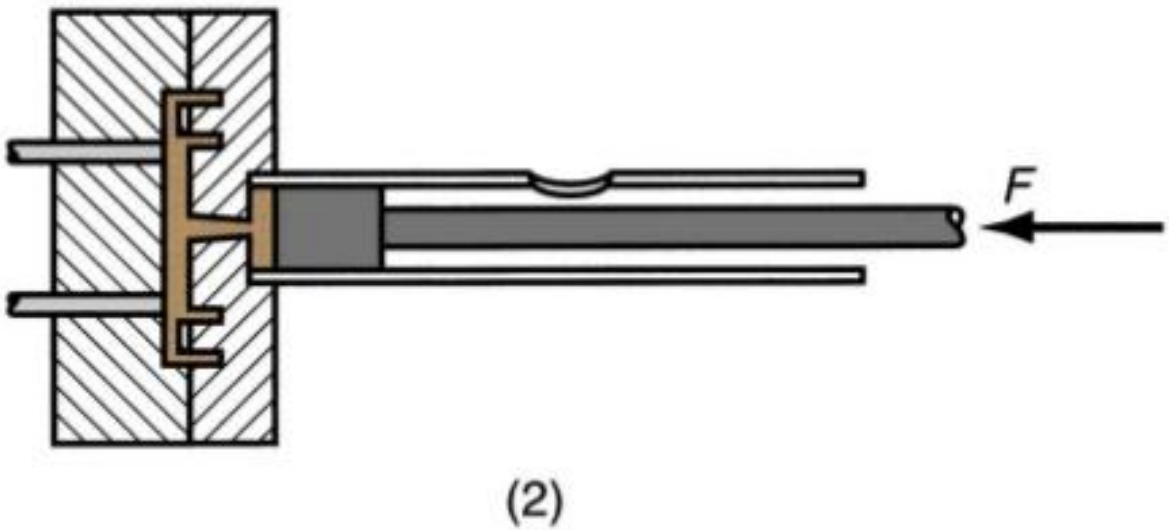

Figure 11 Cycle in cold-chamber casting: (2) ram forces metal to flow into die, maintaining pressure during cooling and solidification.

Molds for Die Casting

- Usually made of tool steel, mold steel, or maraging steel
- Tungsten and molybdenum (good refractory qualities) used to die cast steel and cast iron
- Ejector pins required to remove part from die when it opens
- Lubricants must be sprayed into cavities to prevent sticking

Advantages and Limitations

- Advantages of die casting:
  - Economical for large production quantities
  - Good accuracy and surface finish
  - Thin sections are possible
  - Rapid cooling provides small grain size and good strength to casting
- Disadvantages:
  - Generally limited to metals with low metal points
  - Part geometry must allow removal from die

Centrifugal Casting

➢ Centrifugal Casting

- Casting that utilizes centrifugal force within a spinning mold to force the metal against the walls is known as Centrifugal Casting.

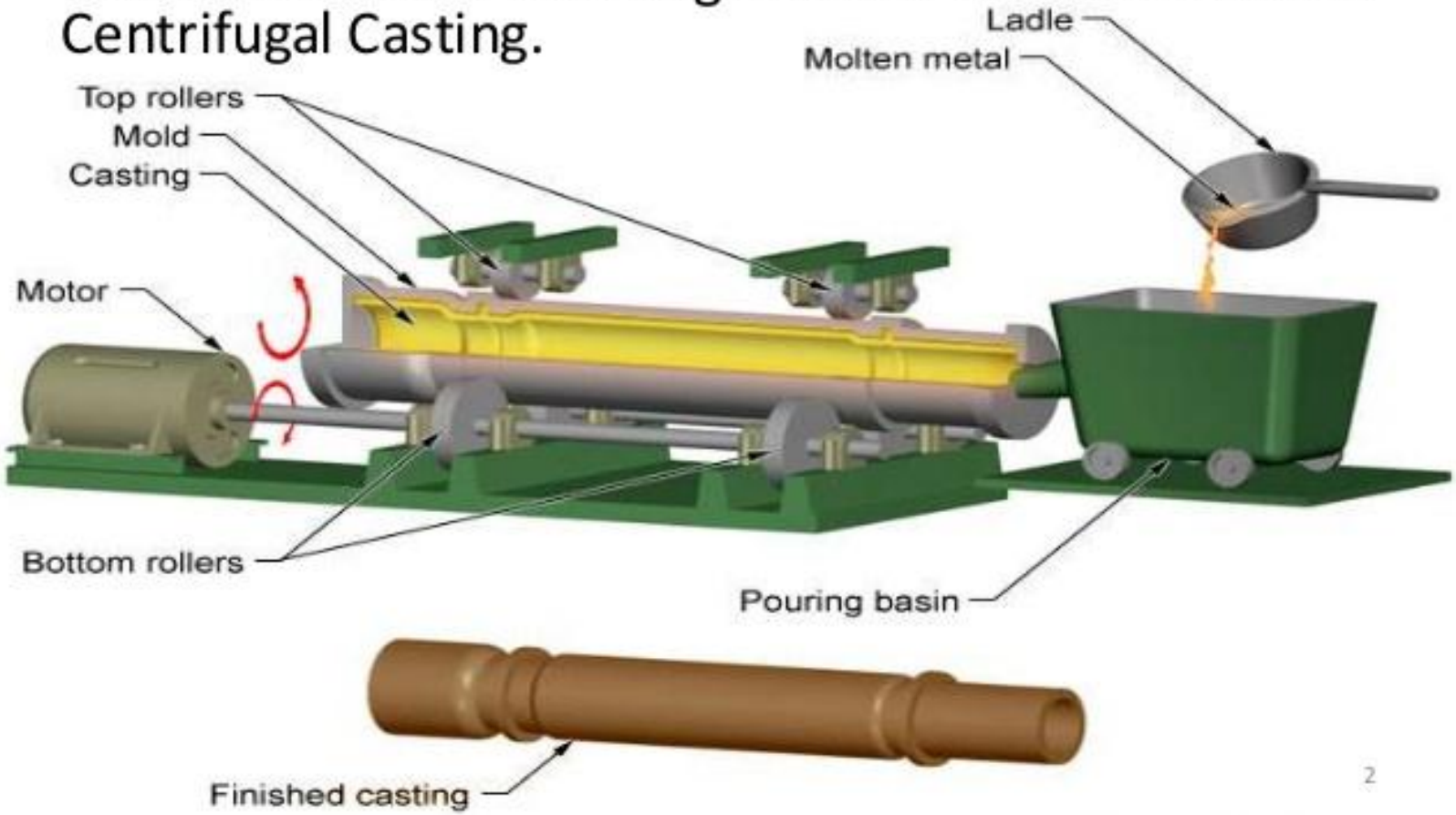

- Centrifugal casting, sometimes called rotocasting, is a metal casting process that uses centrifugal force to form cylindrical parts.

- This differs from most metal casting processes, which use gravity or pressure to fill the mold.

- In centrifugal casting, a permanent mold made from steel, cast iron, or graphite is typically used. However, the use of expendable sand molds is also possible.

- The casting process is usually performed on a horizontal centrifugal casting machine (vertical machines are also available) and includes the following steps:

Steps Involved in Centrifugal Casting

- **1. Preheat the steel mold and coat the mold interior with the refractory ceramic coating (applied as a spray slurry).**
- **2. Melt the metal in the furnace.**
- **3. Rotate the mold (300-3000 rpm, typically around 1000 rpm), pour the metal, and spin the mold until the casting solidifies.**
- **4. Remove the casting from the mold after solidification.**
- **5. Clean, heat-treat and machine the finished casting**

CHARACTERISTICS OF CENTRIFUGAL CASTING

1) The casting is relatively free from defects.

2) Non metallic impurities which segregate toward the bore can be machined off.

3) Less loss of metal in tundish compared to that in gating and risering in conventional and sand casting.

4) Better mechanical properties.

5) Production rate is high.

6) Centrifugal casting process can be used for fabricating functionally gradient metal matrix composite material.

Defects:-

- Conventional static casting defects like internal shrinkage, gas porosity and non-metallic inclusions are less likely to occur in centrifugal casting.

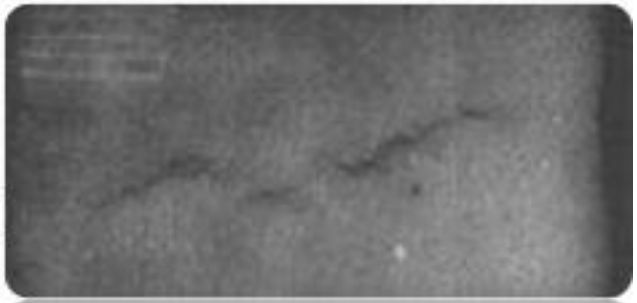

- **Hot Tears** – Hot tears are developed in centrifugal castings for which the highest rotation speeds are used. Longitudinal tears occur when contraction of casting combined with the expansion of the mould, generates hoop stresses exceeding the cohesive strength of the metal at temperatures in the solidus region.

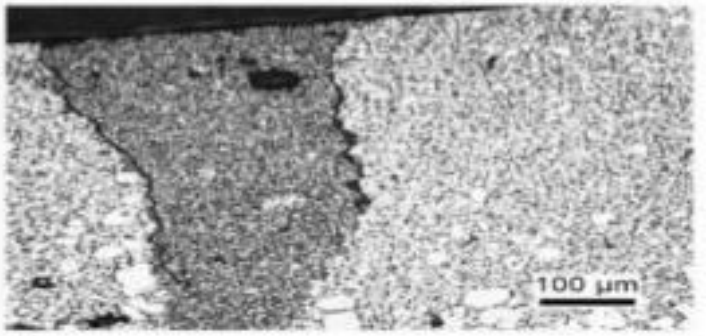

- **Segregation** - Centrifugal castings are under various forms of segregation thus pushing less dense constituents at centre.

- **Banding** – Sometimes castings produce zones of segregated low melting point constituents such as eutectic phases and sulphide and oxide inclusions. Various theories explain this, one states vibration is the main cause of banding.

Applications:-

- Pipes for water gas sewage.
- Bearing Bushes.
- Cylinder Liners.
- Piston rings
- Paper making rollers
- Clutch Plates.
- Pulleys.

Centrifugal Casting

True Centrifugal Casting

Application:-

C.I water supply and sewerage pipes, steel gun barrels, chemical reactor vessels, pressure vessel bodies, reactor tubes and pressure piping for nuclear power plants, paper mill rolls, textile rolls etc.

Semi Centrifugal Casting

Application:-

This process is used for making wheels, rings, rollers, sheaves, pulleys, flywheels, gear blanks, Turbo-Supercharger diaphragm disk, steel railroad wheels, nozzles and similar parts etc.

Centrifuging

Application:

Products may be irregular or non-symmetrical : valve bodies, plugs, valve bonnets, pillow blocks and yokes etc, jewelery etc.

1.True Centrifugal Casting

•True centrifugal castings are produced by pouring molten metal into the cavity of a rapidly rotating metal mold to whose walls the metal is thrown centrifugal force and where it solidifies in the form of a hollow casting. True centrifugal casting is the production of hollow casting by the centrifugal force alone and without the aid of a central core.

•Molten metal is poured into the spinning mold cavity and the metal is held against the wall of the mold by centrifugal force. The speed of rotation and metal pouring rate vary with the alloy and size and shape being cast.

- The centrifugal casting machines used to spin the mould may have either a horizontal or a vertical axis of rotation and for short casting the rotational axis vertical. In the vertical axis machine the central hole will not be completely cylindrical, but will be slightly paraboloidal, which will need machining after the casting is made.

➢ There are two types of horizontal axis centrifugal casting machines which differ in the way the metal is distributed along the length of the mold during pouring :

1. In one , the pouring through (ladle or spout) travels horizontally, while the spinning mold is stationary.
2. In the other type , the ladle is stationary and the mold travels.

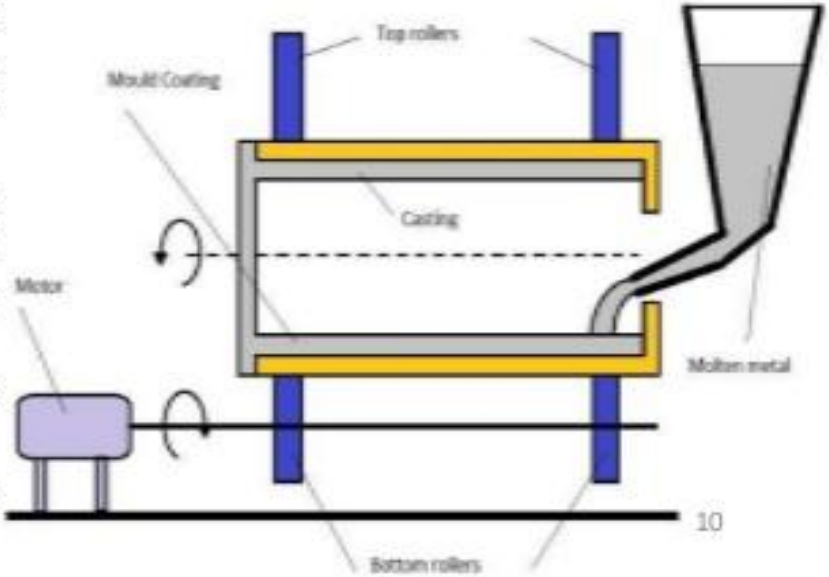

True Centrifugal Casting

- Molds may be made of cast iron or steel, copper, graphite, ceramic, or dry sand.
- Massive, thick metal molds with a thin refractory coating allow the molten metal to begin solidification faster and for the solidification to proceed from the wall of the mold toward the inside of the cast pipe.
- Another type of horizontal centrifugal casting uses a thick, highly insulating sand interface between the mold and the casting. When the metal introduced, the insulating nature of the sand prevents directional solidification, and hence the metal solidifies from the wall and from the inside pipe face at the same time.

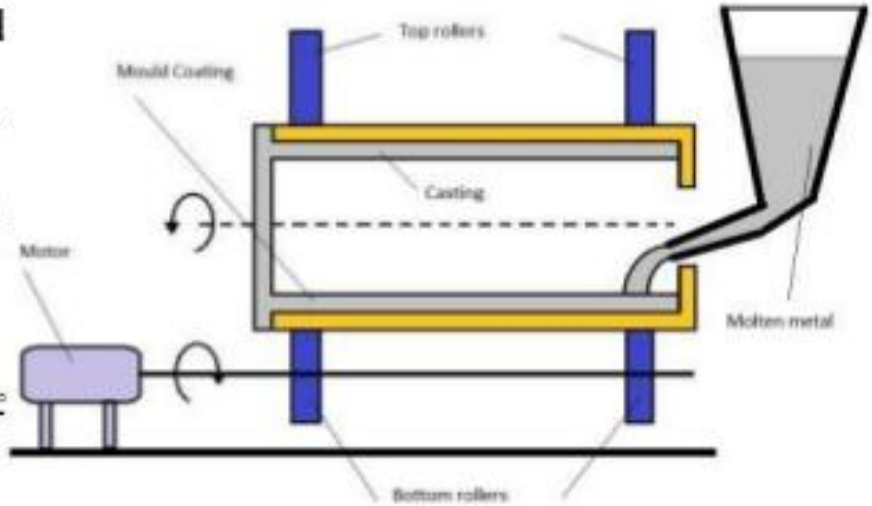

➢ The method of true centrifugal vertical machine which is also known as "The deLavaud Process" is explained below

- The machine consists of an accurately machined metal mould surrounded by water. Dry heat-insulating coats are applied to the inner surface f the mould t secure thermal conditions increase its durability and produce iron castings free of chill.
- The metal mould is heated to 150-200^{0}C before pouring; the mould is cooled to by circulating water through the surrounding shell.
- The long pouring spout is inserted t the far extremity of the mould.
- As pouring proceeds, the rotating mould, that is, the machine is moved slowly on the track, leftwards.
- At the end of the process, the machine will be at the lower end of its track, with the mould spinning continuously till the pipe has solidified.
- The cast pipe is then extracted from the mould by inserting a piper puller.

- ***Advantages :-***

- Castings acquire high density and are distinguished for their fine grained structure and high mechanical strength.
- Inclusions and impurities such s oxide, slag, and gas etc, being lighter than the molten metal will segregate toward
- the centre to the inside surface f the casting, where they may be removed by subsequent machining operations.
- Gates and risers are not needed which results in saving in material and increasing the yield.
- High output.
- Formation of hollow interiors without cores.
- The casting are less subject to directional variation than static castings.

- ***Disadvantages:-***

- Contaminations of inner surface of the casting make it necessary to increase finishing allowance for subsequent machining of inner surfaces.
- An inaccurate diameter of the surface of a casting.
- Not all the alloys can be cast by this method.

2.Semi Centrifugal Casting

- Semi centrifugal casting process is used to produce solid castings and hence, requires a core to produce hollow cavities.

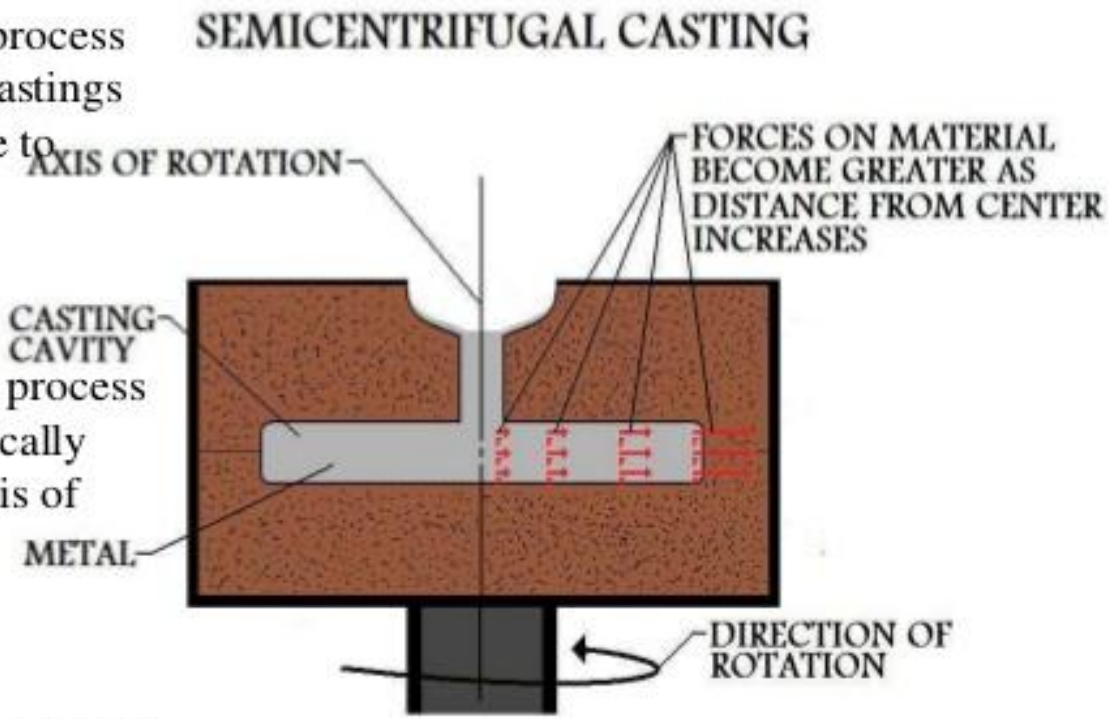

- Semi Centrifugal Casting process is used only for symmetrically shaped objects and the axis of rotation of the mould is always vertical.

- Gear blanks, sheaves, wheels and the pulley are the commonly produced parts by Semi Centrifugal Casting process.

Working Principle of Semi Centrifugal Casting:-

•In Semi Centrifugal Casting the mould is prepared in the usual manner using cope and drag box.

•The mould cavity is prepared with its central axis being vertical and concentric with the axis of rotation.

•The core is placed in position and the mould is rotated at suitable speeds, usually less than true centrifugal casting process.

•The centrifugal force produced due to the rotation of the mould causes the molten metal to fill the cavity to produce the desired shape.

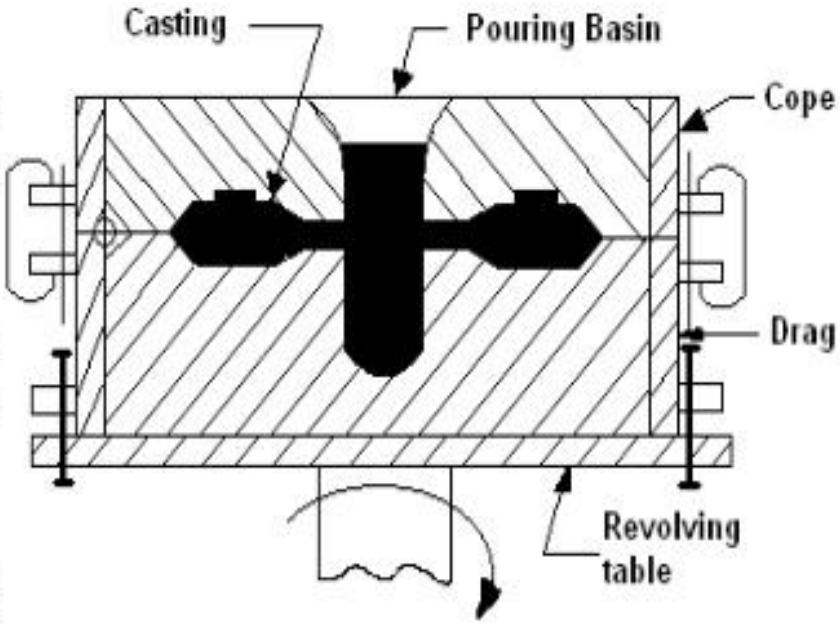

Fig: Semi Centrifugal Casting

3.Centrifuging

- When a group of small molds are arranged in a circle (to balance each other) around the central vertical axis of the flask and the flask is rotated about the vertical axis, the process is called centrifuge casting.

- It is clear that the molds are not symmetrical about the axis of rotation, that is , the axis of casting and the axis of rotation do not coincide with one another.

- Here again the centrifugal force is used to obtain higher pressure on the metal and get more dense castings. The molten metal will flow to all the molds under centrifugal force from a central feeding sprue.

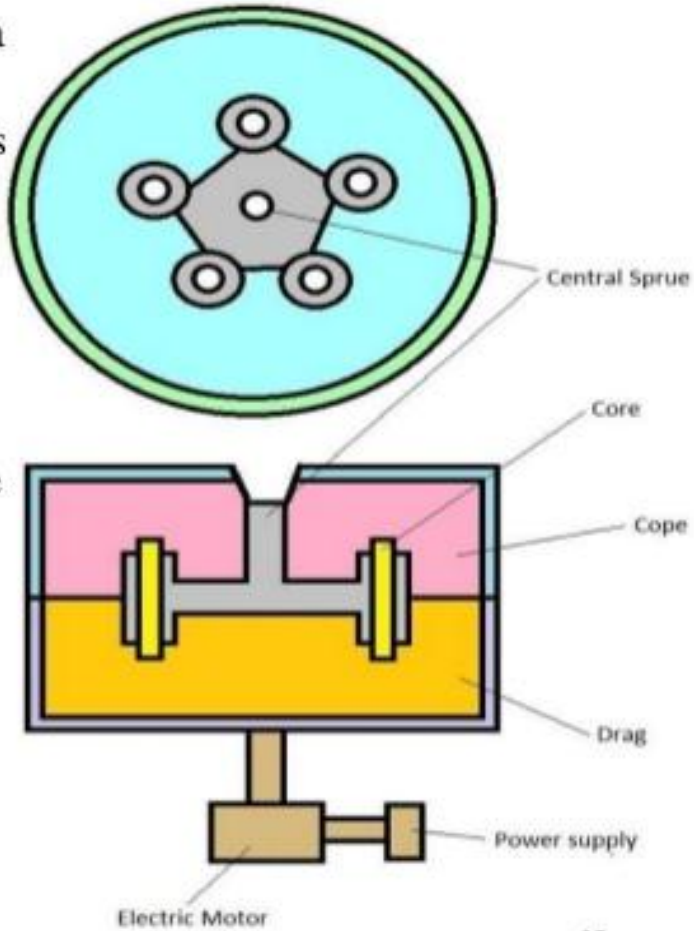

SOME EXAMPLES OF CENTRIFUGAL CASTINGS

Cast Irons

- iron-carbon alloys with more than 2.11% carbon
  - It pass through the eutectic reaction during solidification.
- Properties
  - Inexpensive
  - Have good fluidity
  - Have low liquidus temperature
  - Readily castable

Cast Irons

- typically cast iron contains 2–4% C and 0.5–3% Si
- Effect of Si
  - **reduces the amount of carbon contained in the eutectic. carbon equivalent (CE):**

$$CE = \%C + \frac{1}{3}\%Si$$

  - **Enhances oxidation and corrosion resistance by forming a tight adhering surface oxide.**
  - **It is a *graphite stabilizing element.***
- **Eutectic Reaction in Cast Irons**
  - **Metastable phase diagram**

$$L \rightarrow \gamma + Fe_3C$$

  - **Stable rxn** $L \rightarrow \gamma + \text{graphite}$

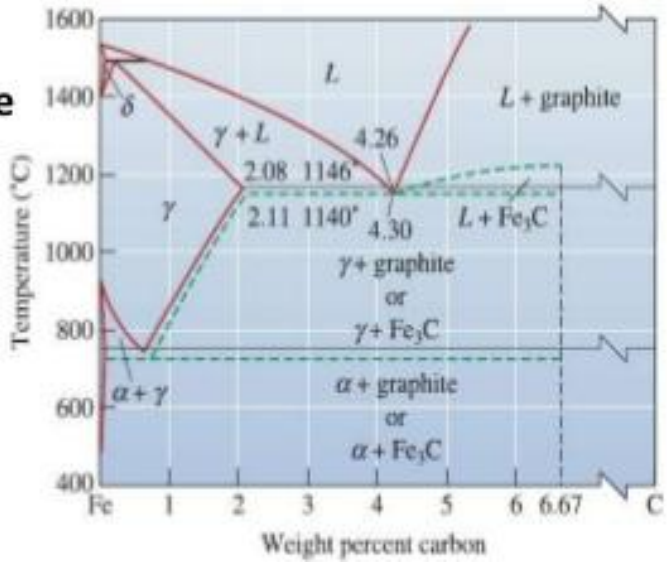

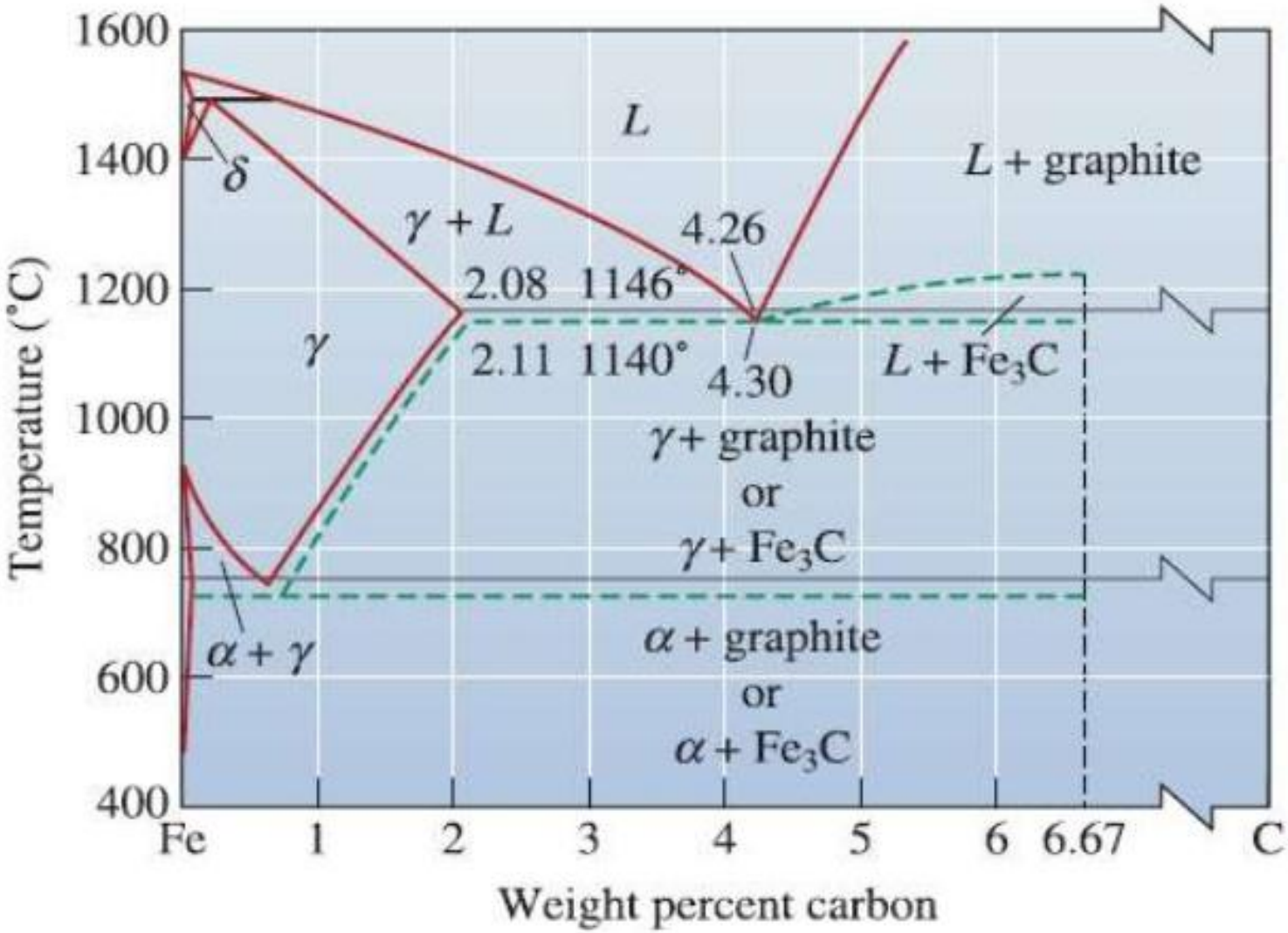
1600
1400
1200
1000
800
600
400
Temperature (°C)
L
L + graphite
δ
γ + L
4.26
2.08 1146°
γ
2.11 1140°
4.30
L + Fe3C
γ+ graphite
or
γ+ Fe3C
α + γ
α + graphite
or
α + Fe3C
Fe
1
2
3
4
5
6
6.67
C
Weight percent carbon

Cast Irons

- *The microstructure of cast iron has two extremes*
  1. *Liquid* $\longrightarrow$ *austenite + Fe_3C (white cast iron)*
  2. *Liquid* $\longrightarrow$ *austenite + graphite (gray, ductile…)*
- *graphite formation is promoted by*
  - *Slow cooling*
  - *High C and Si content*
  - *Heavy or thick section size*
  - *Inoculation particles*
  - *Presence of S, P, Al, Ni, Sn, Mn, Cu, Cobilt, antimony*
- Formation of cementite (*Fe_3C*) is favored by
  - Fast cooling
  - Low C and Si contents
  - Thin sections
  - Alloying elements, titanium, vanadium, zirconium, chromium, manganese, and molybdenum

Types of Cast Iron

- Depending on chemical composition, cooling rate, types and amount of inoculants that are used we can have
  a. Gray iron
  b. White iron
  c. Malleable iron
  d. Ductile iron
  e. Compacted graphite iron

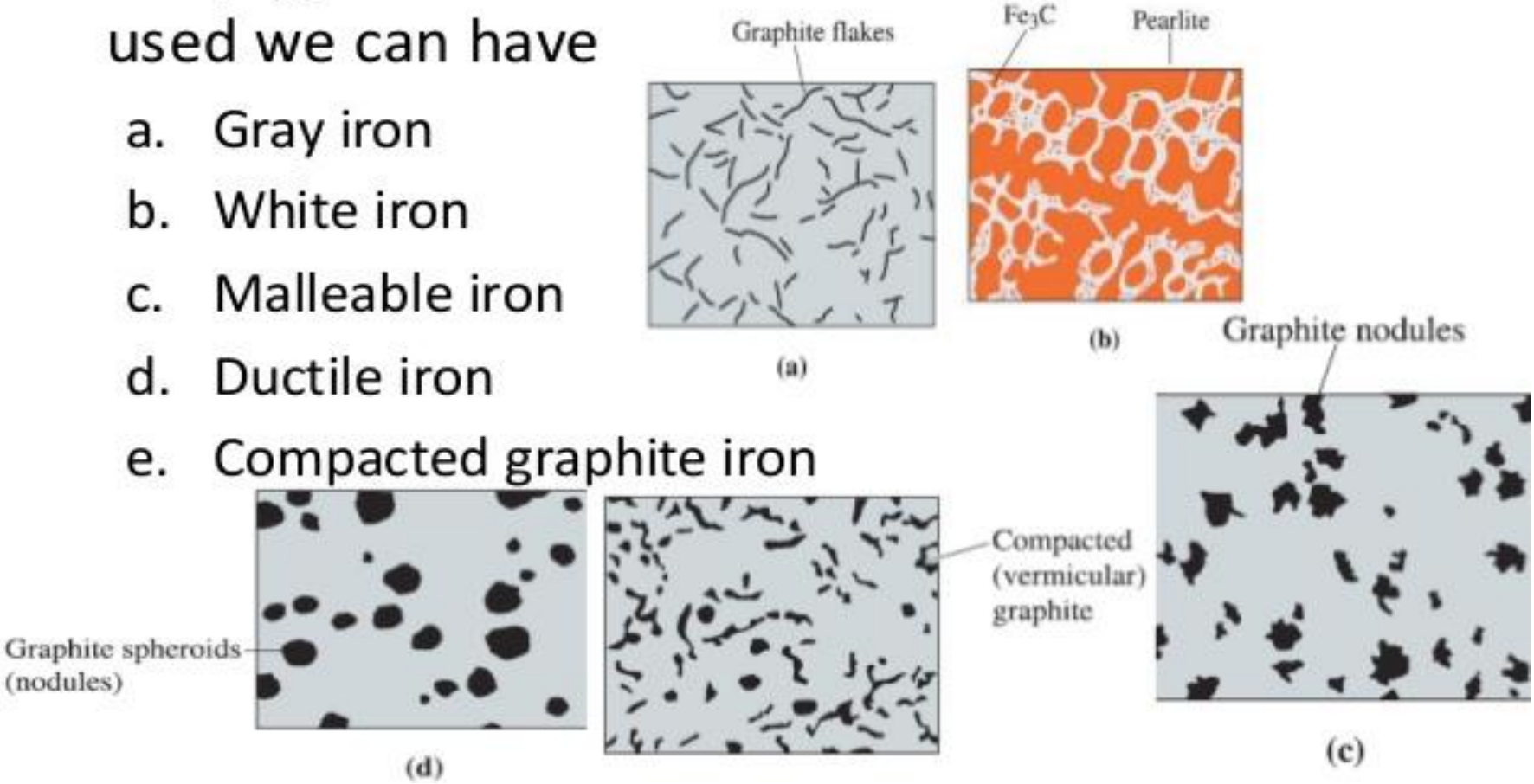

- **Gray cast iron**
  - The least expensive and most common type
  - Characterized by formation of graphite
  - Typical composition ranges from 2.5-4.0% C, 1.0-3.0% Si, and 0.4-1.0% Mn.
  - contains small, interconnected graphite flakes that cause low strength and ductility.
  - It is the most widely used cast iron
  - It is named for the dull gray color of the fractured surface.
  - The gray irons are specified by a class number of 20 to 80.
- Properties
  - high compressive strength,
  - good machinability,
  - good resistance to sliding wear,
  - good resistance to thermal fatigue,
  - good thermal conductivity, and
  - good vibration damping.

Gray CI

- **Application**;
  - Damping vibrational energy
    - Base structures for machines and heavy equipment
  - High resistance to wear.
  - High fluidity at casting temperature
    - Intricate shapes; Low casting shrinkage allowance.
      - (strength is not a primary consideration)
      - Tensile strength 120 – 300 MPa
    - Small cylinder blocks, cylinder heads, pistons, liners, clutch plates, transmission cases.
    - gears, flywheels, water pipes, engine cylinders, brake discs, Machinery beds

GRAY IRON PRODUCTS SAMPLES

- **White cast iron**
  - is a hard, brittle alloy containing massive amounts of Fe_3C.
  - A fractured surface of this material appears white, hence the name.
  - Features promoting formation of cementite over graphite
    - A low carbon equivalent (1.8-3.6 %C, 0.5-1.9%Si, 0.25-0.8%Mn) and
    - Rapid cooling
- A group of highly alloyed white irons are used for their hardness and resistance to abrasive wear.

White CI

- **Application:**
  - brake shoes, shot blasting nozzles, mill liners, crushers, pump impellers and other abrasion resistant parts.
  - wear-resistant surface, example, as rollers in rolling mills. Generally, white iron is used as an intermediary in the production of yet another cast iron, **malleable iron**
- White fracture surface
- No graphite, because carbon forms Fe_3C or more complex carbides
- Abrasion resistant
- Often alloyed

- **Malleable cast iron**
  - formed by the heat treatment (in range of 900°C) of unalloyed 3%C white cast iron (carbon equivalent 2.5%C, 1.5%Si)
  - the cementite dissociates into its component elements (graphite clumps, or nodules)
  - It exhibits better ductility than gray or white cast irons. It is also very machinable.
- The production steps
- **first stage graphitization:** cementite decomposes to the stable austenite and graphite phases
- **second stage graphitization:** slow cooling through eutectoid temperature to make *ferritic malleable iron*

- *when austenite is cooled in air or oil Pearlitic malleable iron is obtained (*pearlite or martensite.*)*
- **Drawing:** is a heat treatment that tempers the martensite or spheroidizes the pearlite.

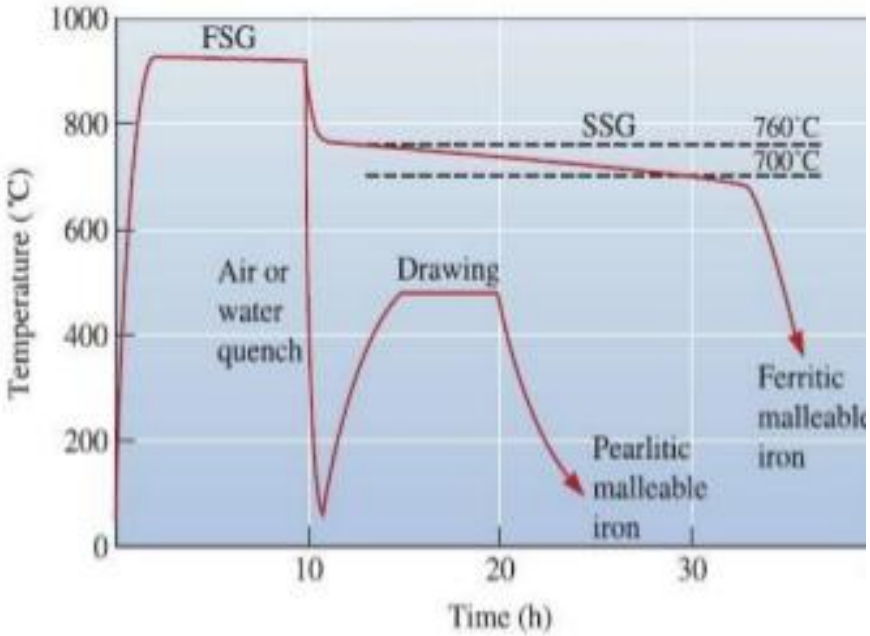

Application

Connecting rods, transmission gears, and differential cases for the automotive industry, and also flanges, pipe fittings, and valve parts for railroad, marine, and other heavy-duty services

parts of power train of vehicles, bearing caps, steering gear housings, agricultural equipment, railroad equipment

- **Ductile or nodular cast iron**
  - contains spheroidal graphite particles.
  - produced by treating liquid iron with a carbon equivalent of near 4.3% with magnesium
- Steps
  - **Desulfurization**: CaO is used to remove sulfure and oxygen from the liquid.
  - **Nodulizing:** Mg in dilute form (MgFeSi alloy) is added, a residual of 0.03%Mg must be present after treatment in order for spheroidal graphite to grow
- **inoculation:** heterogeneous nucleation of the graphite is essential
- **Fading:** occurs by the gradual, nonviolent loss of Mg due to vaporization and/or reaction with oxygen

Ductile or nodular cast iron

- **Application:**
  - **valves, pump bodies, crankshafts, high-strength gears (heavy duty gears) and machine, rollers, slides, die material having high strength and high ductility.**

- Inoculation with Ce or Mg or both causes graphite to form as spherulites, rather than flakes
- Also known as spheroidal graphite (SG), and nodular graphite iron
- Far better ductility than grey cast iron

- **Compacted graphite cast iron:** contains rounded but interconnected graphite also produced during solidification
- intermediate between flakes and spheres with numerous rounded rods of graphite that are interconnected to the nucleus of the eutectic cell.
- **vermicular graphite:** forms when ductile iron fades
- permits strengths and ductilities that exceed those of gray cast iron, but allows the iron to retain good thermal conductivity and vibration damping properties.

The mechanical characteristic of Gray cast Irons - summary

- **Less hard and brittle**
- **Very weak in tension due to the pointed and sharp end of graphite flakes, where the failure of component initiated at this point.**
- **Good during compression which graphite acts as a cushion or sponge that could absorb the compression energy.**
- Low shrinkage in mould due to formation of graphite flakes.
- Good dry bearing qualities due to graphite.

THE MICRISTRUCTURE OF GREY CAST IRON

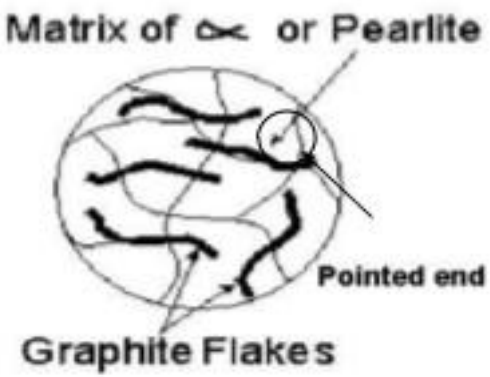

GREY CAST IRON PRODUCTS

Sprockets

Park Bench

Manhole Covers with Frames

Gas Burners

White Cast Irons - summary

- The composition of Carbon and Silicon contents for white cast irons are in range between 2.5 to 4.0% and less than 1.0% respectively.
- With a rapid cooling rate most of the carbon in the cast irons consist of pearlite and cementite (Fe_3C).
- The mechanical characteristic of White cast Irons are as follows:
  - Relatively very hard, brittle and not weldable compared to gray cast iron, since it is obtained from rapid cooling process.
  - When it's annealed, it becomes malleable cast iron.
- A fracture surface of these alloy has a white appearance and it is called white cast iron.
- <u>Typical Uses</u>:

  Necessitate a very hard and wear resistance surface such as rollers in rolling mills, railroads wheel.

THE MICRISTRUCTURE OF WHITE CAST IRON

Ductile (Nodular) Cast Irons - summary

- **Ductile cast iron, which is sometimes called nodular or spheroidal graphite cast iron. It gets this name because its carbon is in the shape of small spheres, not flakes.**
- **Magnesium or cerium is added to the iron before casting occurs. The effect of these material is to prevent the formation of graphite flakes during the slow cooling of the iron.**
- **The structures of the cast irons is mainly pearlite with nodules of graphite.**
- **A heat treatment process can be applied to a pearlite nodular iron to give a microstructure of graphite nodules in ferrite. The ferrite structure is more ductile but has less tensile strength than the pearlite form. It's also weldable.**
- **<u>Typical Uses</u>:**
  Valves, pump bodies, gears crankshafts, and other machine components.

TEE pipe

THE MICRISTRUCTURE OF DUCTILE CAST IRON

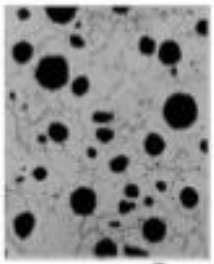

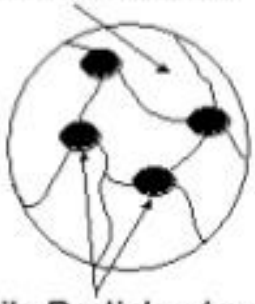

Malleable Cast Irons - summary

- **Malleable cast iron is produced by the heat treatment of white cast irons.**
- **Heating white iron at temperatures 800 c to 900 c for 50 hours in a neutral atmosphere (to prevent oxidation) causes a decomposition of the cementite, forming graphite in the form of clusters/ rossettes surrounded by a ferrite or pearlite matrix depending on cooling rate.**
- **The mechanical characteristic of malleable cast iron is similar to nodular cast iron and give higher strength and more ductility and malleability. The silicon content is low.**

MALLEABLE CAST IRON PRODUCTS

CLAMPS

THE MICRISTRUCTURE OF MALLEABLE CAST IRON

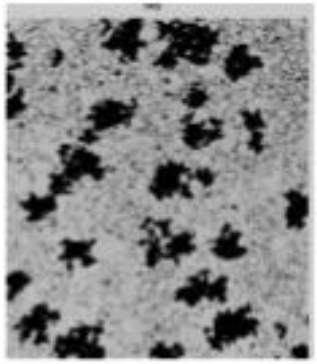

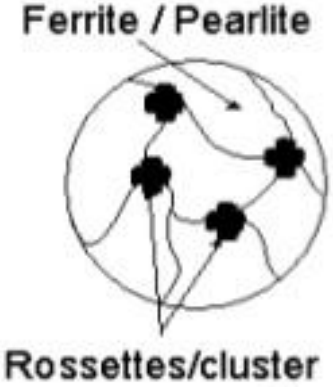

Effect of alloying elemets
General Characteristics of White Cast Irons

- White Cast Irons contain **Chromium to prevent formation of Graphite** upon solidification and to ensure stability of the carbide phase.
- Usually, **Nickel, Molybdenum, and/or Copper** are alloyed to prevent to the **formation of Pearlite** when a matrix of **Martensite is desired**.
- Fall into three major groups:
- Nickel Chromium White Irons: containing 3-5%Ni, 1-4%Cr. Identified by the name Ni-Hard 1-4
- The chromium-molybdenum irons (high chromium irons): 11-23%Cr, 3%Mo, and sometimes additionally alloyed w/ Ni or Cu.
- 25-28%Cr White Irons: contain other alloying additions of Molybdenum and/or Nickel up to 1.5%

Nickel Chromium

- Produced for more than 50 years, effective materials for crushing and grinding in industry.
- Consists of **Martensite matrix,** with Nickel alloyed at 3-5% in order to suppress transformation of Austenite to Pearlite.
- Chromium usually included between 1.4-4% to ensure Carbon phase solidifies to **Carbide**, not Graphite. (Counteracts the Graphitizing effect of Ni)
-

Fig. 5 Typical microstructure of class I type A nickel-chromium white cast iron. 340x

Fig. 6 Typical microstructure of class I type D nickel-chromium white cast iron. 340x

Abrasion resistance (usually desired property of this material) increases with Carbon content, but toughness decreases.

Applications: Because of low cost, used primarily in mining applications as ball mill liners and grinding balls.

CASTING DEFECTS

MISMATCH

- The casting that does not match at the parting line is known as Mismatch or Mould shift.

Causes :

- Worn out or bent clamping pins.
- Misalignment of two halves of pattern.
- Improper location & support of core.
- Faulty core boxes.
- Loose dowels.

Remedies :

- Increase strength of mould & core.
- Provide adequate support to core.
- Proper alignment of two halves of the pattern.
- Proper clamping of mould box.
- Repair or replace dowels & pin causing mismatch.

Moulding-related Defects

- **Improper Closure**
  - **Across parting plane**: flash
  - **Along parting line**: mismatch

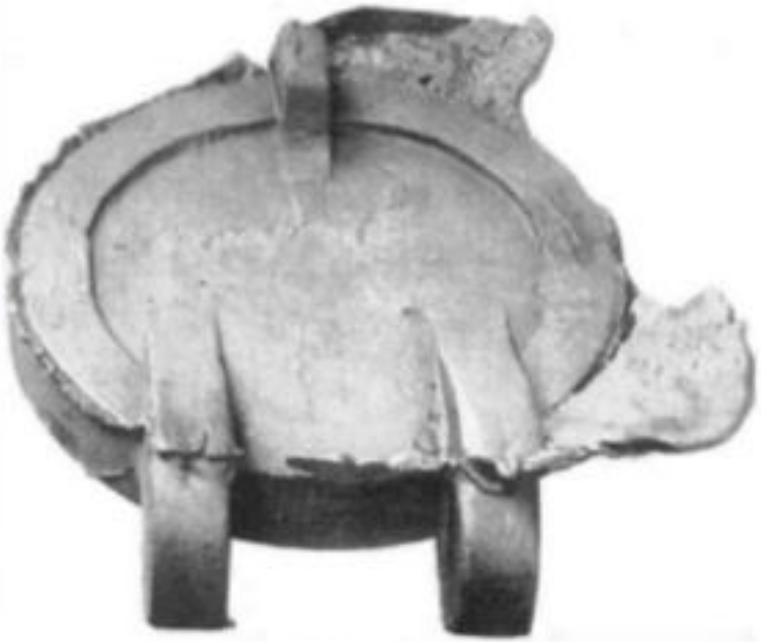

FLASH

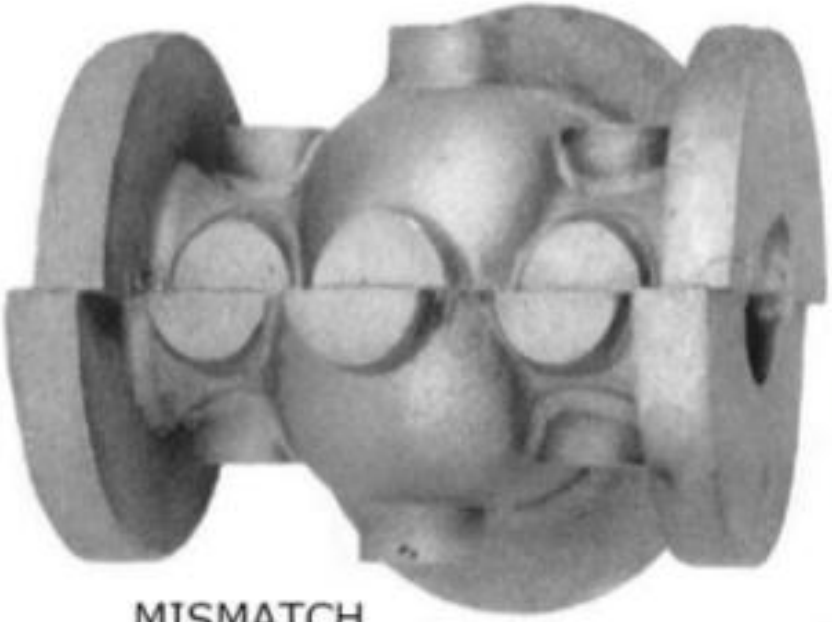

MISMATCH

[Atlas of Casting Defects, Institute of British Foundrymen]

MISRUN & COLD SHUTS

- When the metal is unable to fill the mould cavity completely & thus leaves unfilled cavities, it is called as misrun defect.

- When two metal streams meeting in the mould cavity, do not fuse together properly, causing discontinuity or weak spot inside casting, it is called as cold shuts.

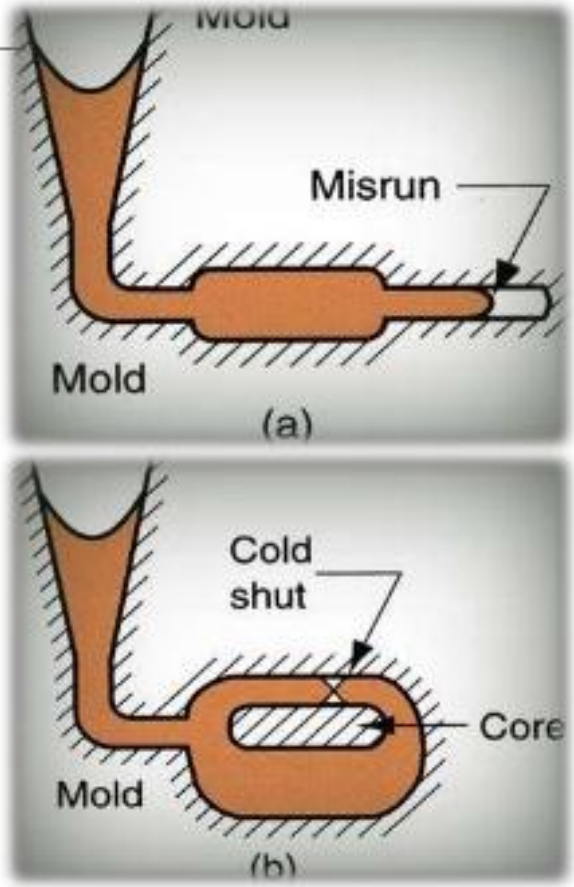

MISRUN & COLD SHUTS

- **Causes** :
  - Low pouring temperature.
  - Faulty gating system design.
  - Too thin casting sections.
  - Slow and intermitted pouring.
  - Improper alloy composition.
  - Use of damaged pattern.
  - Lack of fluidity in molten metal.

- **Remedies** :
  - Smooth pouring with the help of monorail.
  - Properly transport mould during pouring.
  - Providing appropriate pouring temperature.
  - Modifying the gating system design.

Filling-related Defects

- **Incomplete Filling**: cold shut, misrun.
- **Gaseous Entrapments**: blow hole, gas porosity.
- **Solid Inclusions**: sand inclusion, slag inclusion.

[Atlas of Casting Defects, Institute of British Foundrymen]

COLD SHUT

MISRUN

BLOW HOLE

GAS POROSITY

SHRINKAGE CAVITY

- Shrinkage cavity is a void on the surface of the casting caused mainly due to uncontrolled and haphazard solidification of the metal.

- Shrinkage defects can be split into two different types:
  1) External shrinkage
  2) Closed shrinkage defects.

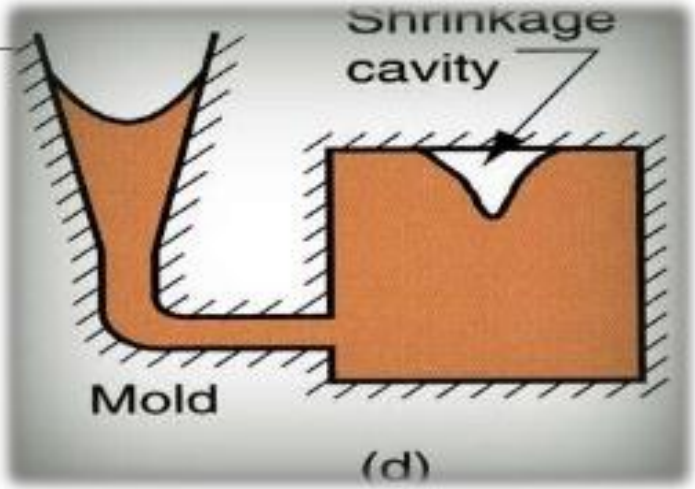

SHRINKAGE CAVITY

- **Causes**:
  - Inadequate and improper gating & risering system.
  - Too much high pouring temperature.
  - Improper chilling.
- **Remedies**:
  - Ensure proper directional solidification by modifying gating, risering & chilling system.

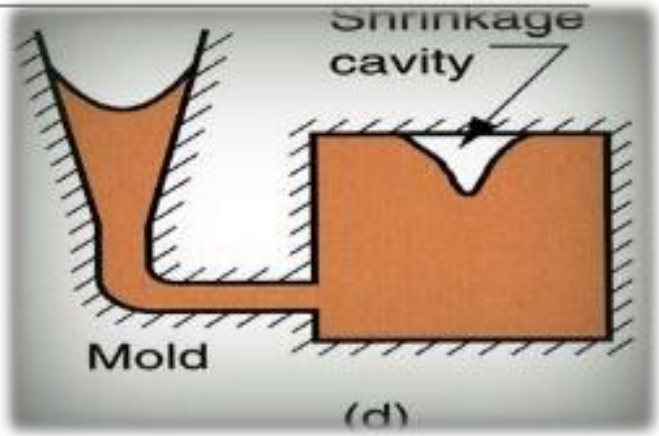

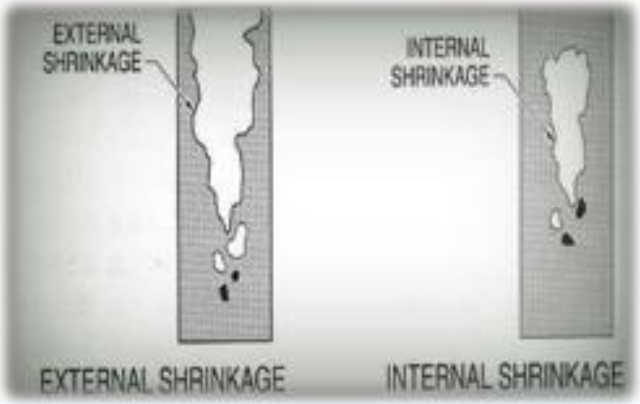

BLOW HOLES

- Balloon shaped gas cavities caused by release of mould gases during pouring are known as blow holes.

Causes :

- Ramming is too hard.
- Cores are not sufficiently baked.
- Excess moisture content.
- Low sand permeability.
- Excessive fineness of sand grains.
- Rusted chills, chaplets & inserts.
- Presence of gas producing ingredients.

Remedies :

- Baking of cores properly.
- Control of moisture content in moulding sand.
- Use of rust free chills, chaplets & inserts.
- Provide adequate venting in mould and cores.
- Ramming the mould less harder.

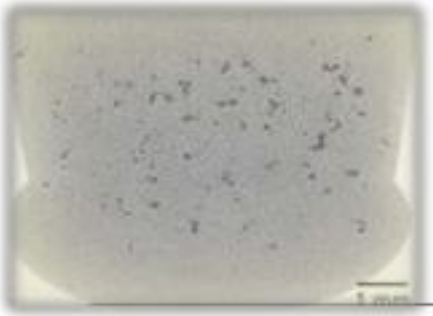

POROSITY

- Porosity is in the form of cavities caused due to gas entrapment during solidification.

- **Causes** :
  - High pouring temperature.
  - Gas dissolved in metal charge.
  - Less flux used.
  - Molten metal not properly degassed.
  - Slow solidification of casting.
  - High moisture and low permeability of mould.

- **Remedies** :
  - Regulate pouring temperature
  - Control metal composition.
  - Increase flux proportions.
  - Ensure effective degassing.
  - Modify gating and risering.
  - Reduce moisture and increase permeability of mould.

HOT TEARS or HOT CRACKING

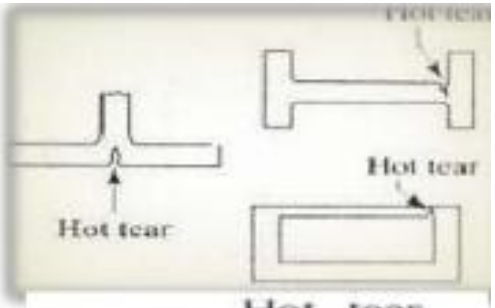

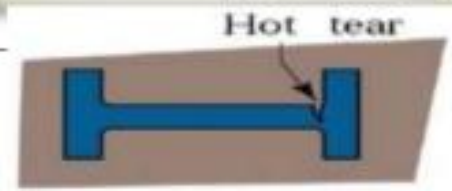

- Hot tears are ragged irregular internal or external cracks occurring immediately after the metal have solidified.
- **Causes** :
  - Lack of collapsibility of core & mould.
  - Hard ramming of mould.
  - Faulty casting design.
- **Remedies** :
  - Providing softer ramming.
  - Improve casting design.
  - Improve collapsibility of core & mould.

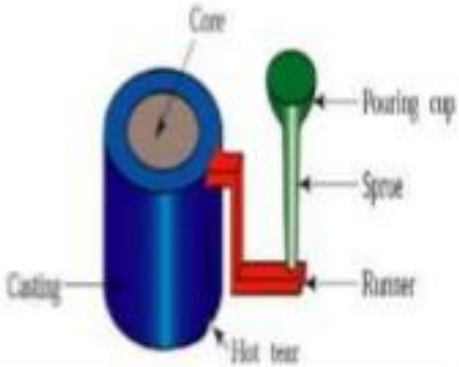

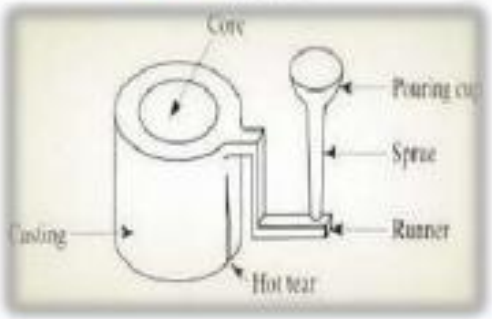

Solidification/Cooling-related Defects

- **Solidification Shrinkage**: cavity, porosity, centerline, sink.
- **Hindered Cooling Contraction**: hot tear, crack, distortion.

SHRINKAGE CAVITY

POROSITY

SINK

CORNER SHRINKAGE

CRACK

[Atlas of Casting Defects, Institute of British Foundrymen]

Youcan

METAL PENETRATION

- Penetration occurs when the molten metal flows between the sand particles in the mould.
- **Causes** :
  - Low strength of moulding sand.
  - Large size of moulding sand.
  - High permeability of sand.
  - Soft ramming.
- **Remedies** :
  - Use of fine grain with low permeability.
  - Appropriate ramming.

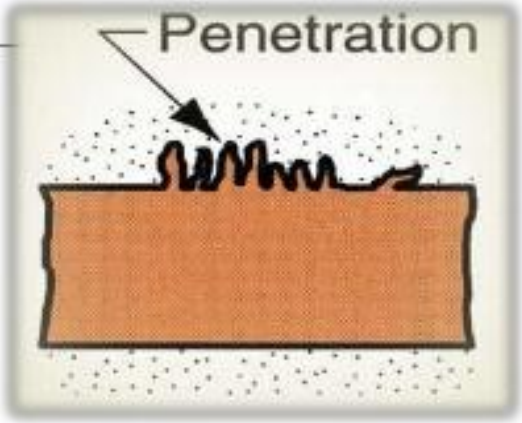

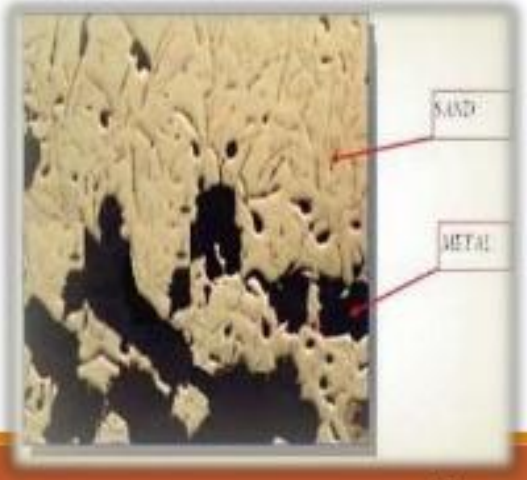

PIN HOLES

- Formation of many small gas cavities at or slightly below surface of casting is called as pin holes.

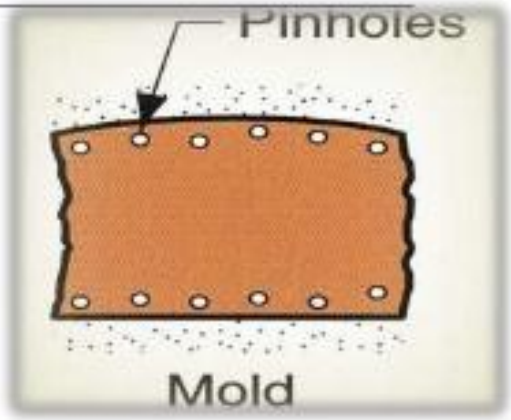

- **Causes** :
  - Sand with high moisture content.
  - Absorption of hydrogen/carbon monoxide gas in the metal.
  - Alloy not being properly degassed.
  - Sand containing gas producing ingredients.
- **Remedies** :
  - Reducing the moisture content & increasing permeability of moulding sand.
  - Employing good melting and fluxing practices.
  - Improving a rapid rate of solidification.

SWELL

- A swell is an enlargement of mould cavity by localized metal pressure.
- **Causes** :
  - Insufficient or soft ramming.
  - Low strength mould & core.
  - Mould not being supported properly.
- **Remedies** :
  - Sand should be rammed evenly and properly.
  - Increase strength of mould & core.

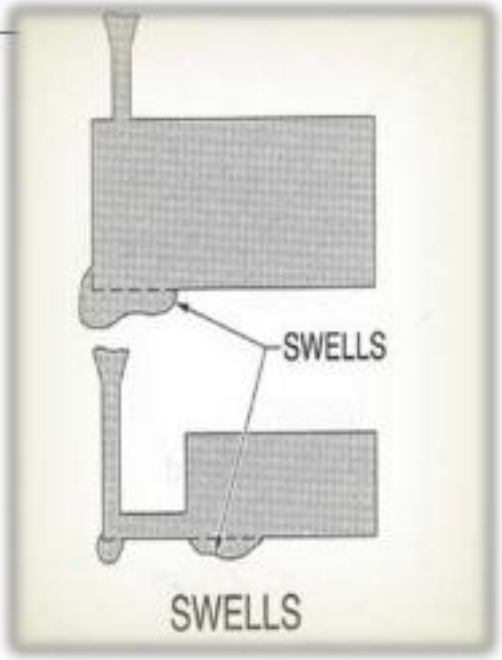

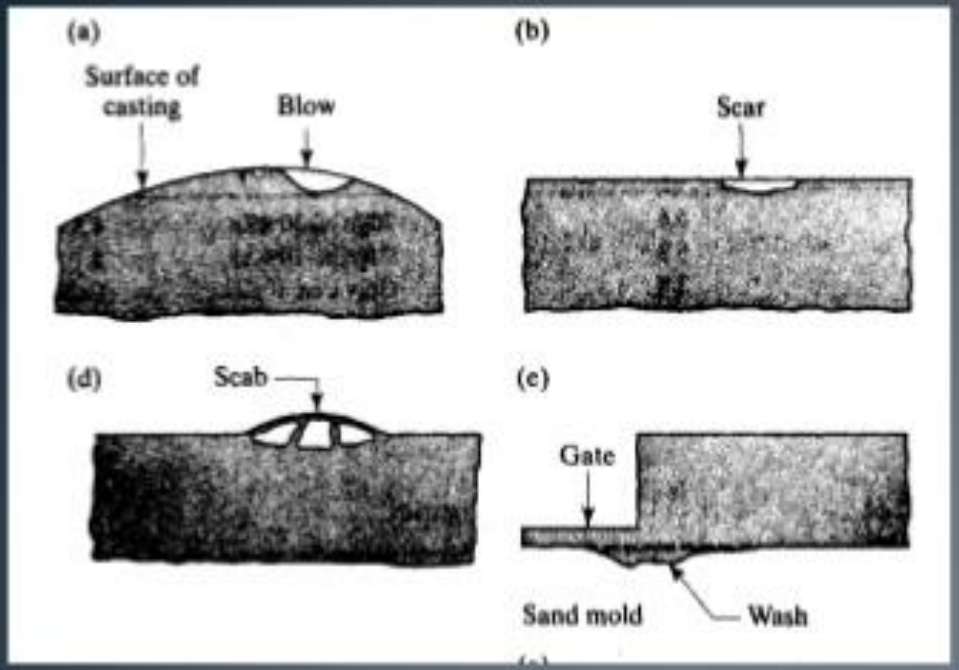

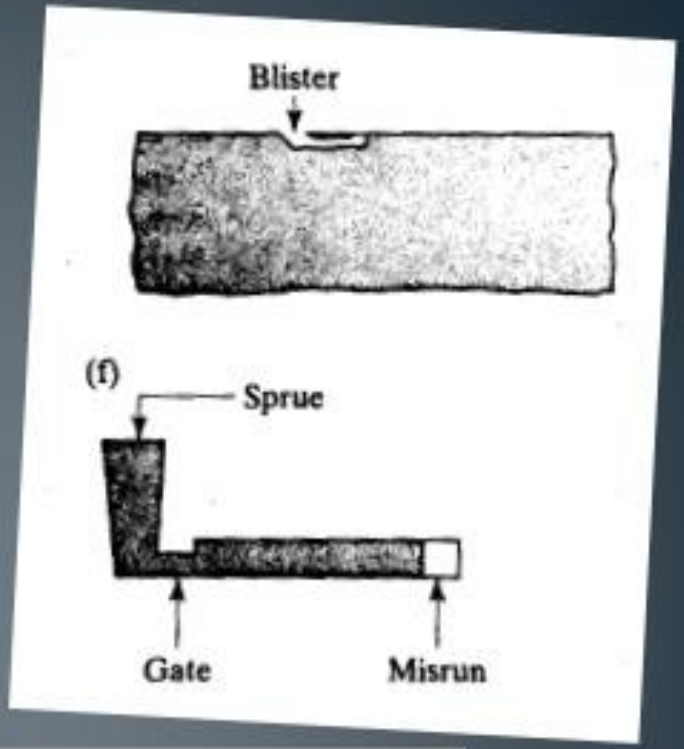

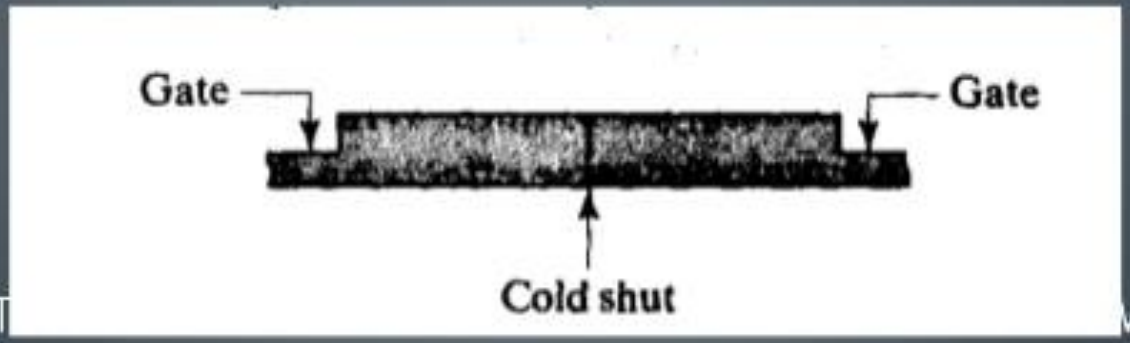

DEFECT MISED BY PROPER DESIGN. MOLD PREPARATION. PROPER POURING.

YoucaN

DROP

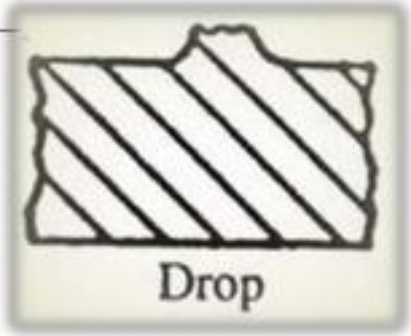

- Drop is a projection on drag part of casting due fall of its cope part.
- **Causes** :
  - Low green strength of the moulding sand.
  - Low mould hardness.
  - Insufficient reinforcement of sand projections in the cope.
- **Remedies** :
  - Moulding sand should have sufficient green strength.
  - Provide adequate reinforcement to sand projections and cope by using nails and gaggers.
  - Ramming should not be too soft.

RAT TAILS or BUCKLES

- Slight compression failure of a thin layer of moulding sand is called as rat tails & more severe compression failure is called as buckles i.e. Buckling of sand.

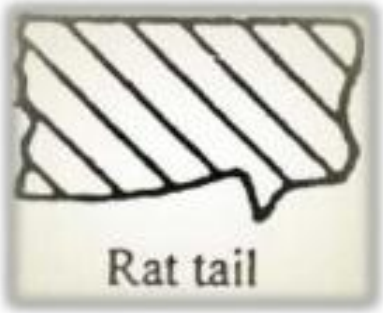

- **Causes** :
  - Excessive mould hardness.
  - Lack of combustible additives in the moulding sand.
  - Continuous large surfaces on the casting.
- **Remedies** :
  - Suitable addition of combustible additives to moulding sand.
  - Reduction in mould hardness.
  - Modifications in casting design.