PICHAK

V1 Arshia Madadi

پیـچـک

POWER 12V->5V

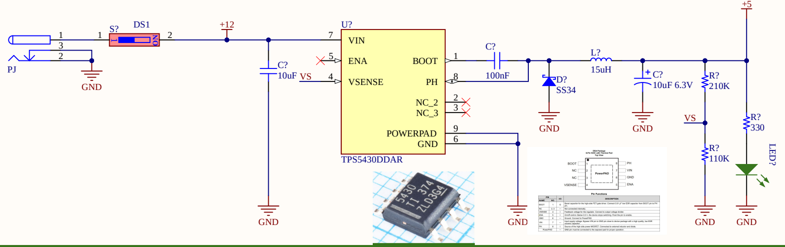

PJ
1
3
2
GND
S?
DS1
1
2
ON
+12
C?
10uF
VS
U?
7 VIN
5 ENA
4 VSENSE
BOOT 1
PH 8
NC_2 2
NC_3 3
POWERPAD 9
GND 6
TPS5430DDAR
C?
100nF
D?
SS34
L?
15uH
C?
10uF 6.3V
R?
210K
VS
R?
110K
+5
R?
330
LED?
GND

POWER 5V->3V3

AMS1117

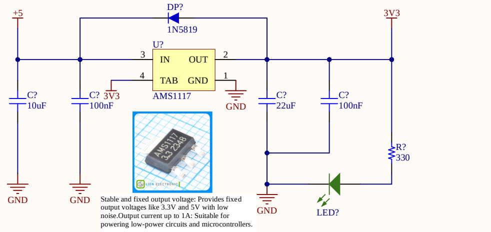

+5
DP?
1N5819
3V3
U?
3 IN
OUT 2
4 TAB
GND 1
AMS1117
C?
10uF
C?
100nF
3V3
C?
22uF
C?
100nF
R?
330
LED?
GND
AMS1117
3.3 2348
LION ELECTRONIC

Stable and fixed output voltage: Provides fixed output voltages like 3.3V and 5V with low noise.Output current up to 1A: Suitable for powering low-power circuits and microcontrollers.

POWER 5V->4V2

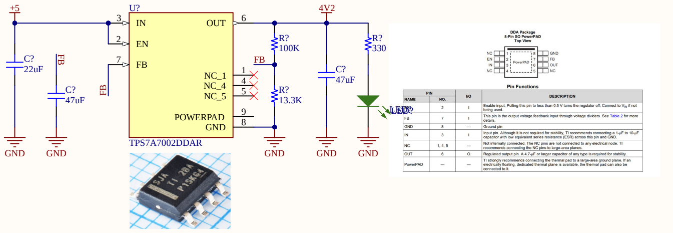

+5
C?
22uF
FB
C?
47uF
FB
U?
3 IN
2 EN
7 FB
OUT 6
NC_1 1
NC_4 4
NC_5 5
POWERPAD 9
GND 8
TPS7A7002DDAR
4V2
R?
100K
FB
R?
13.3K
C?
47uF
R?
330
LED?
GND
DDA Package
8-Pin SO PowerPAD
Top View
NC
EN
IN
NC
GND
FB
OUT
NC
PowerPAD

Pin Functions

PIN NAME	PIN NO.	I/O	DESCRIPTION
EN	2	I	Enable input. Pulling this pin to less than 0.5 V turns the regulator off. Connect to V_{IN} if not being used.
FB	7	I	This pin is the output voltage feedback input through voltage dividers. See Table 2 for more details.
GND	8	—	Ground pin
IN	3	I	Input pin. Although it is not required for stability, TI recommends connecting a 1-μF to 10-μF capacitor with low equivalent series resistance (ESR) across this pin and GND.
NC	1, 4, 5	—	Not internally connected. The NC pins are not connected to any electrical node. TI recommends connecting the NC pins to large-area planes.
OUT	6	O	Regulated output pin. A 4.7-μF or larger capacitor of any type is required for stability.
PowerPAD	—	—	TI strongly recommends connecting the thermal pad to a large-area ground plane. If an electrically floating, dedicated thermal plane is available, the thermal pad can also be connected to it.

SIM800

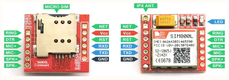

MICRO SIM
RING
DTR
MIC+
MIC-
SPK+
SPK-
NET
Vcc
RST
RXD
TXD
GND
IPX ANT.
LED
SIM800L

Protocol : UART

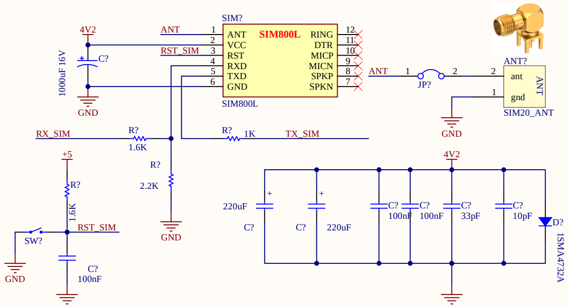

4V2
C?
1000uF 16V
ANT
RST_SIM
SIM?
1 ANT
2 VCC
3 RST
4 RXD
5 TXD
6 GND
SIM800L
RING 12
DTR 11
MICP 10
MICN 9
SPKP 8
SPKN 7
SIM800L
ANT
1
JP?
2
ANT?
2 ant
1 gnd
ANT
SIM20_ANT
RX_SIM
R?
1.6K
R?
1K
TX_SIM
R?
2.2K
+5
R?
1.6K
RST_SIM
SW?
C?
100nF
4V2
220uF
C?
C?
220uF
C?
100nF
C?
100nF
C?
33pF
C?
10pF
D?
1SMA4732A
GND

Relay

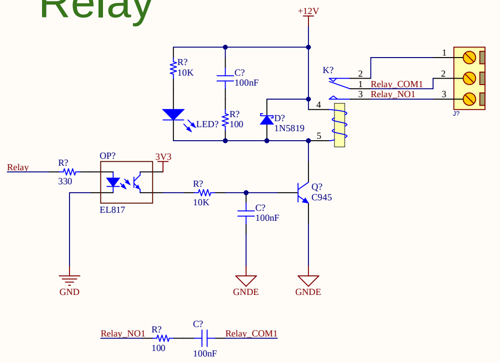

+12V
R?
10K
C?
100nF
LED?
R?
100
D?
1N5819
K?
2
1 Relay_COM1
3 Relay_NO1
4
5
J?
1
2
3
Relay
R?
330
OP?
3V3
EL817
R?
10K
C?
100nF
Q?
C945
GND
GNDE
GNDE
Relay_NO1
R?
100
C?
100nF
Relay_COM1

Mosfet

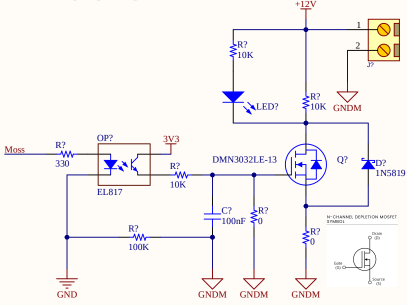

+12V
R?
10K
LED?
R?
10K
J?
1
2
GNDM
Moss
R?
330
OP?
3V3
EL817
R?
10K
DMN3032LE-13
Q?
D?
1N5819
C?
100nF
R?
0
R?
100K
R?
0
N-CHANNEL DEPLETION MOSFET SYMBOL
Drain (D)
Gate (G)
Source (S)
GND
GNDM

UI

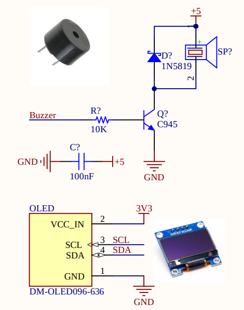

+5
D?
1N5819
SP?
2
Buzzer
R?
10K
Q?
C945
GND
C?
100nF
+5
OLED
VCC_IN 2
SCL 3
SDA 4
GND 1
DM-OLED096-636
3V3
SCL
SDA
GND

LED1
R?
330
ledMCU?
LED2
R?
330
ledMCU?
GND

DHT22

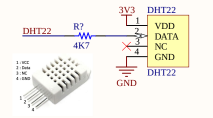

DHT22
R?
4K7
3V3
DHT22
1 VDD
2 DATA
3 NC
4 GND
DHT22
GND
1 : VCC
2 : Data
3 : NC
4 : GND
1
2
3
4

ESP32

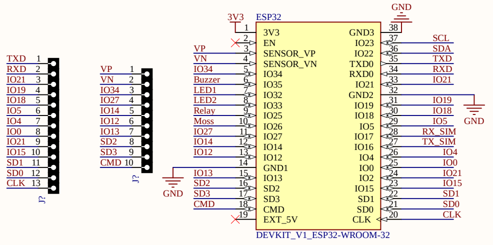

TXD 1
RXD 2
IO21 3
IO19 4
IO18 5
IO5 6
IO4 7
IO0 8
IO21 9
IO15 10
SD1 11
SD0 12
CLK 13
J?
VP 1
VN 2
IO34 3
IO27 4
IO14 5
IO12 6
IO13 7
SD2 8
SD3 9
CMD 10
J?
3V3
ESP32
1 3V3
2 EN
3 SENSOR_VP
4 SENSOR_VN
5 IO34
6 IO35
7 IO32
8 IO33
9 IO25
10 IO26
11 IO27
12 IO14
13 IO12
14 GND1
15 IO13
16 SD2
17 SD3
18 CMD
19 EXT_5V
GND3 38
IO23 37
IO22 36
TXD0 35
RXD0 34
IO21 33
GND2 32
IO19 31
IO18 30
IO5 29
IO17 28
IO16 27
IO4 26
IO0 25
IO2 24
IO15 23
SD1 22
SD0 21
CLK 20
VP
VN
IO34
Buzzer
LED1
LED2
Relay
Moss
IO27
IO14
IO12
IO13
SD2
SD3
CMD
SCL
SDA
TXD
RXD
IO21
IO19
IO18
IO5
RX_SIM
TX_SIM
IO4
IO0
IO21
IO15
SD1
SD0
CLK
GND
DEVKIT_V1_ESP32-WROOM-32

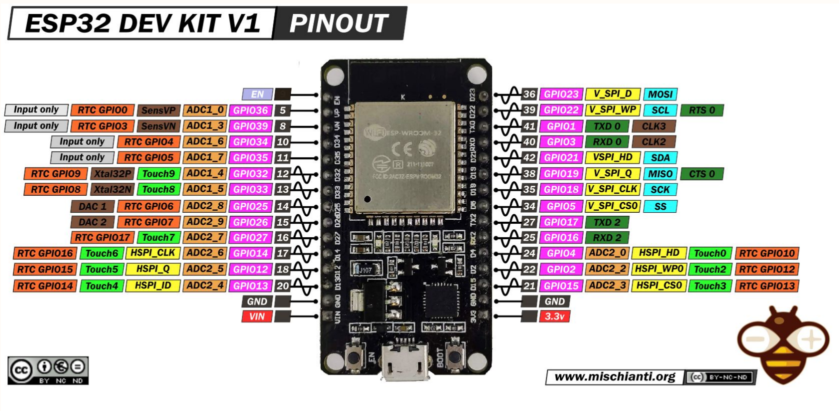

ESP32 DEV KIT V1
PINOUT
EN
Input only
RTC GPIO0
SensVP
ADC1_0
GPIO36
5
Input only
RTC GPIO3
SensVN
ADC1_3
GPIO39
8
Input only
RTC GPIO4
ADC1_6
GPIO34
10
Input only
RTC GPIO5
ADC1_7
GPIO35
11
RTC GPIO9
Xtal32P
Touch9
ADC1_4
GPIO32
12
RTC GPIO8
Xtal32N
Touch8
ADC1_5
GPIO33
13
DAC 1
RTC GPIO6
ADC2_8
GPIO25
14
DAC 2
RTC GPIO7
ADC2_9
GPIO26
15
RTC GPIO17
Touch7
ADC2_7
GPIO27
16
RTC GPIO16
Touch6
HSPI_CLK
ADC2_6
GPIO14
17
RTC GPIO15
Touch5
HSPI_Q
ADC2_5
GPIO12
18
RTC GPIO14
Touch4
HSPI_ID
ADC2_4
GPIO13
20
GND
VIN
36
GPIO23
V_SPI_D
MOSI
39
GPIO22
V_SPI_WP
SCL
RTS 0
41
GPIO1
TXD 0
CLK3
40
GPIO3
RXD 0
CLK2
42
GPIO21
VSPI_HD
SDA
38
GPIO19
V_SPI_Q
MISO
CTS 0
35
GPIO18
V_SPI_CLK
SCK
34
GPIO5
V_SPI_CS0
SS
27
GPIO17
TXD 2
25
GPIO16
RXD 2
24
GPIO4
ADC2_0
HSPI_HD
Touch0
RTC GPIO10
22
GPIO2
ADC2_2
HSPI_WP0
Touch2
RTC GPIO12
21
GPIO15
ADC2_3
HSPI_CS0
Touch3
RTC GPIO13
GND
3.3v
EN
VP
VN
D34
D35
D32
D33
D25
D26
D27
D14
D12
D13
GND
VIN
D23
D22
TX0
RX0
D21
D19
D18
D5
TX2
RX2
D4
D2
D15
GND
3V3
EN
BOOT

BY NC ND

www.mischianti.org BY-NC-ND

Board Stack Report