Sheet: Sheet_MainBoard

File: MainBoard.sch

Sheet: Sheet_PowerSupply

File: VoltageCharger.sch

Sheet: Sheet5A136E68

File: SubBoard.sch

Written by Kyuma Ohta <whatisthis.sowhat _at_ gmail.com>

Sheet: /
File: Doorbell_Pic32.sch

Title: Inteligent Door bell (General)

Size: A4	Date: Nov 21, 2017	Rev:
KiCad E.D.A. kicad 4.0.7+dfsg1-1		Id: 1/4

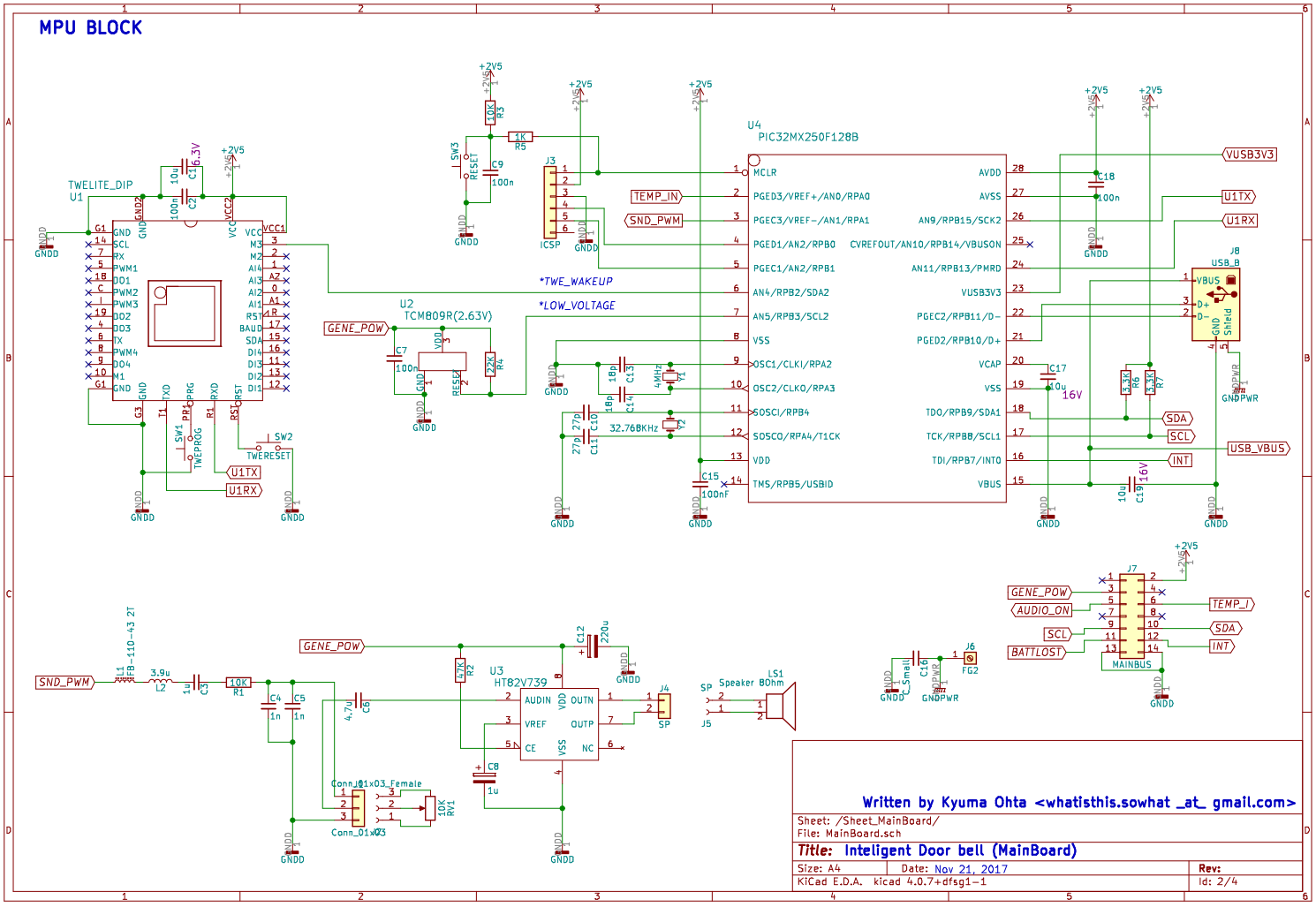
MPU BLOCK
TWELITE_DIP
U1
U2
TCM809R(2.63V)
U3
HT82V739
U4
PIC32MX250F128B
J3
ICSP
J4
SP
J5
LS1
Speaker 80hm
J6
FG2
J7
MAINBUS
J8
USB_B
SW2
TWERESET
SW3
RESET
SW1
TWEPROG
TEMP_IN
SND_PWM
GENE_POW
*TWE_WAKEUP
*LOW_VOLTAGE
VUSB3V3
U1TX
U1RX
SDA
SCL
INT
USB_VBUS
AUDIO_ON
BATTLOST
TEMP_I
32.768KHz
4MHz
16V
GNDD
GNDPWR
+2V5
Written by Kyuma Ohta <whatisthis.sowhat _at_ gmail.com>
Sheet: /Sheet_MainBoard/
File: MainBoard.sch
Title: Inteligent Door bell (MainBoard)
Size: A4
Date: Nov 21, 2017
Rev:
KiCad E.D.A. kicad 4.0.7+dfsg1-1
Id: 2/4

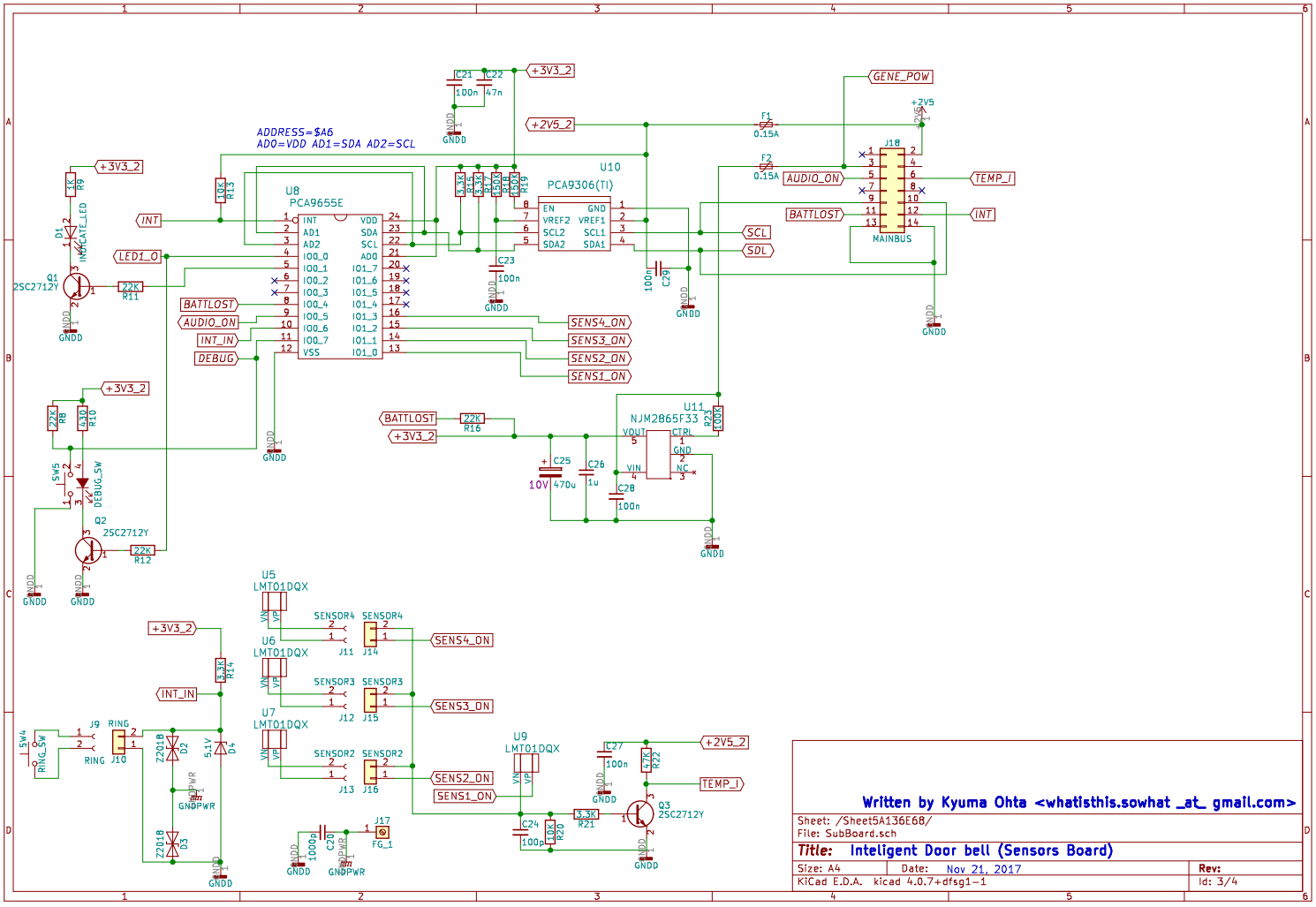

Written by Kyuma Ohta <whatisthis.sowhat _at_ gmail.com>

Sheet: /Sheet5A136E68/
File: SubBoard.sch

Title: Inteligent Door bell (Sensors Board)

Size: A4	Date: Nov 21, 2017	Rev:
KiCad E.D.A. kicad 4.0.7+dfsg1-1		Id: 3/4

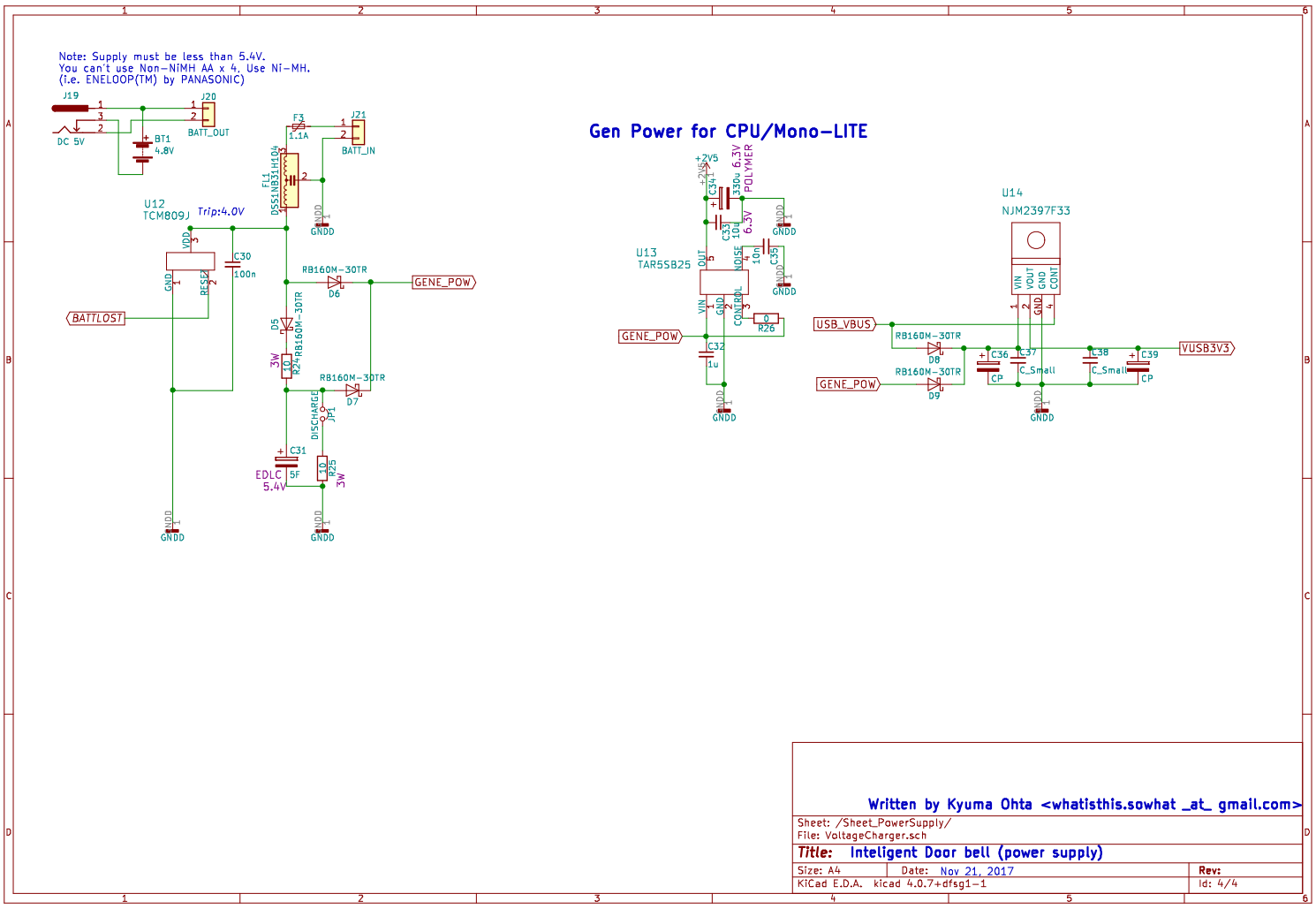
Note: Supply must be less than 5.4V.
You can't use Non-NiMH AA x 4. Use Ni-MH.
(i.e. ENELOOP(TM) by PANASONIC)
Gen Power for CPU/Mono-LITE
J19
DC 5V
J20
BATT_OUT
BT1
4.8V
F3
1.1A
J21
BATT_IN
FI1
DSS1NB31H104
U12
TCM809J
Trip:4.0V
VDD
GND
RESET
C30
100n
BATTLOST
RB160M-30TR
D6
GENE_POW
D5
R24
10
3W
D7
DISCHARGE
JP1
C31
EDLC
5F
5.4V
R25
GNDD
U13
TAR5SB25
+2V5
C34
350u 6.3V
POLYMER
C33
10u
6.3V
C35
10n
VIN
CONTROL
NOISE
OUT
R26
0
C32
1u
U14
NJM2397F33
VIN
VOUT
CONT
USB_VBUS
D8
D9
C36
CP
C37
C_Small
C38
C39
VUSB3V3
Written by Kyuma Ohta <whatisthis.sowhat _at_ gmail.com>
Sheet: /Sheet_PowerSupply/
File: VoltageCharger.sch
Title: Inteligent Door bell (power supply)
Size: A4
Date: Nov 21, 2017
Rev:
KiCad E.D.A. kicad 4.0.7+dfsg1-1
Id: 4/4