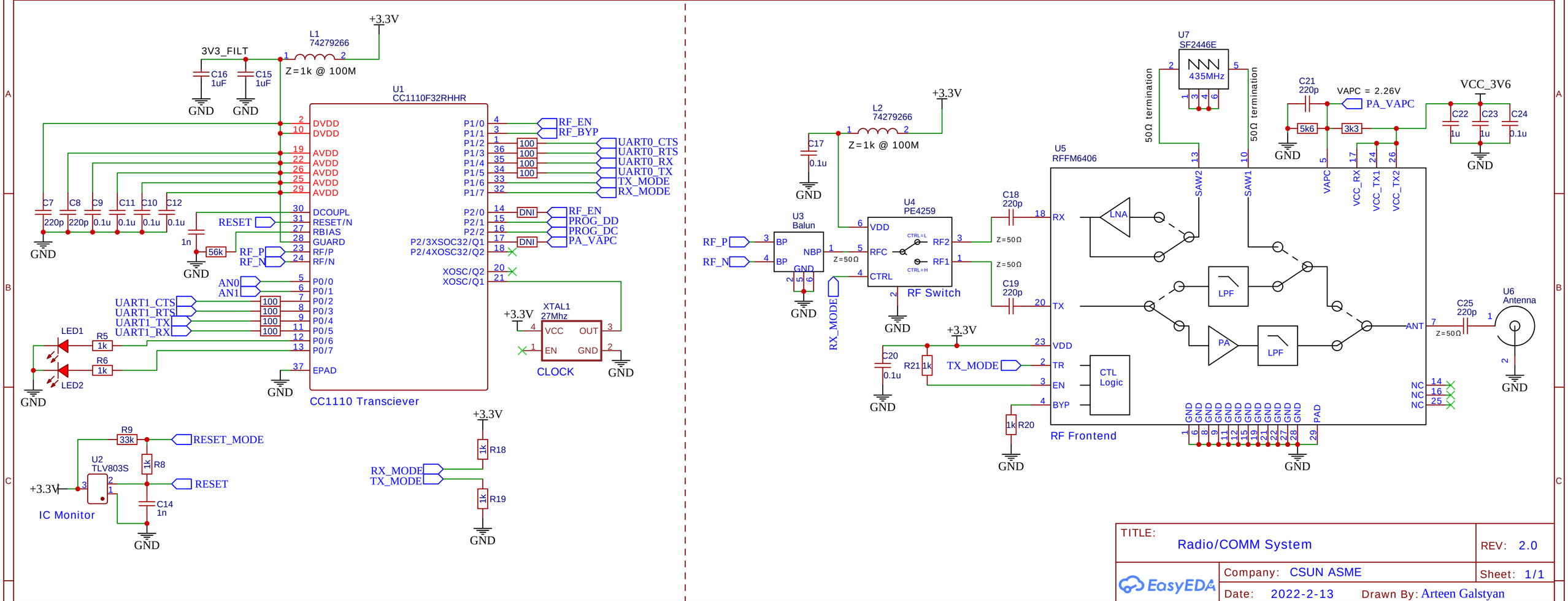


| | |
|---|---|
| TITLE: Radio/COMM System | REV: 2.0 |
| Company: CSUN ASME | Sheet: 1/1 |
| Date: 2022-2-13 | Drawn By: Arteen Galstyan |

EasyEDA