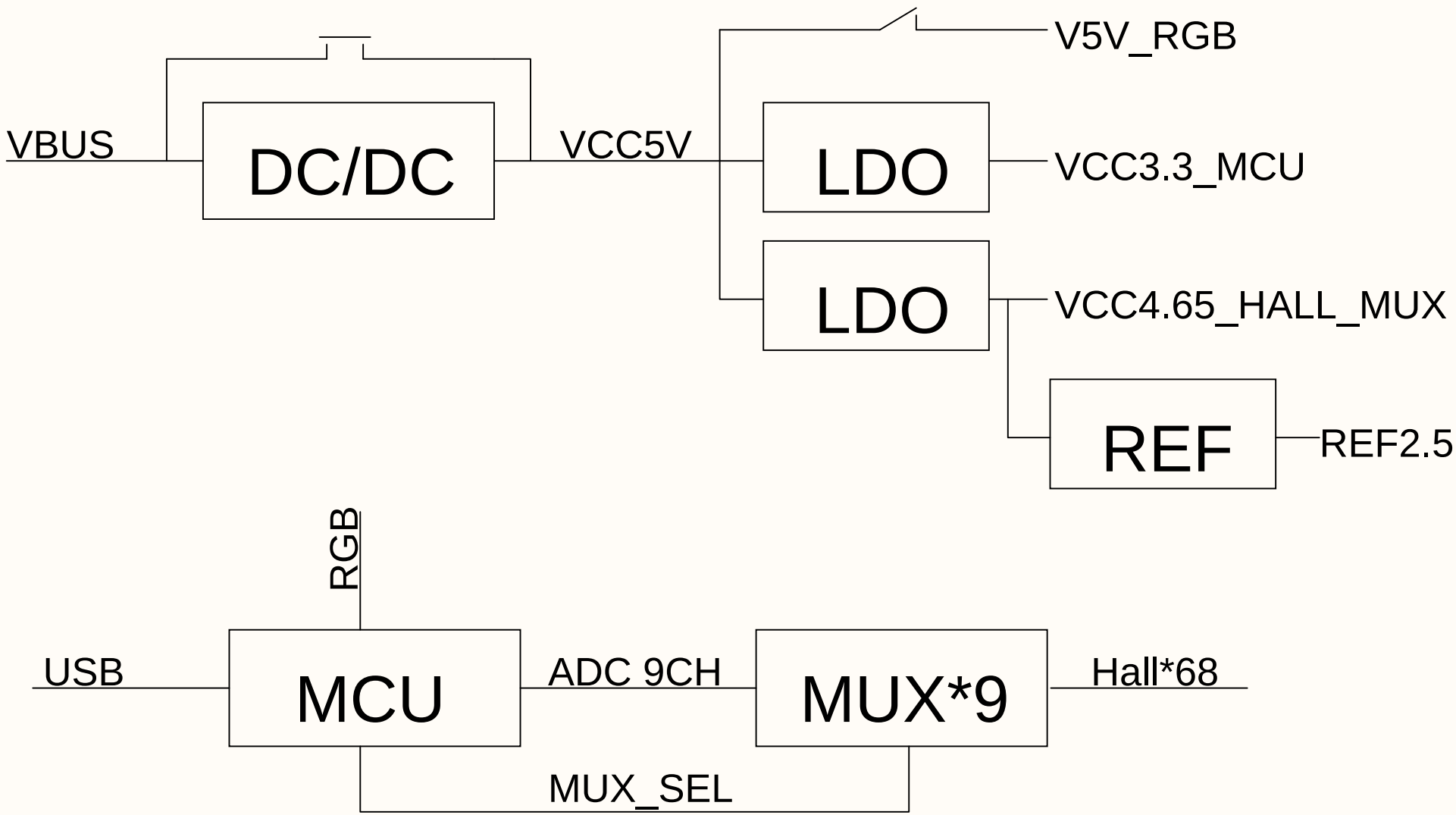

Project: AT32-Magnetic-Gaming-Keyboard		Ver: 1.0
Title: Structure		Page: 1
ARTERY	Company: Artery Technology	Size: A4
	Date: 2026-01-29	Drawed:

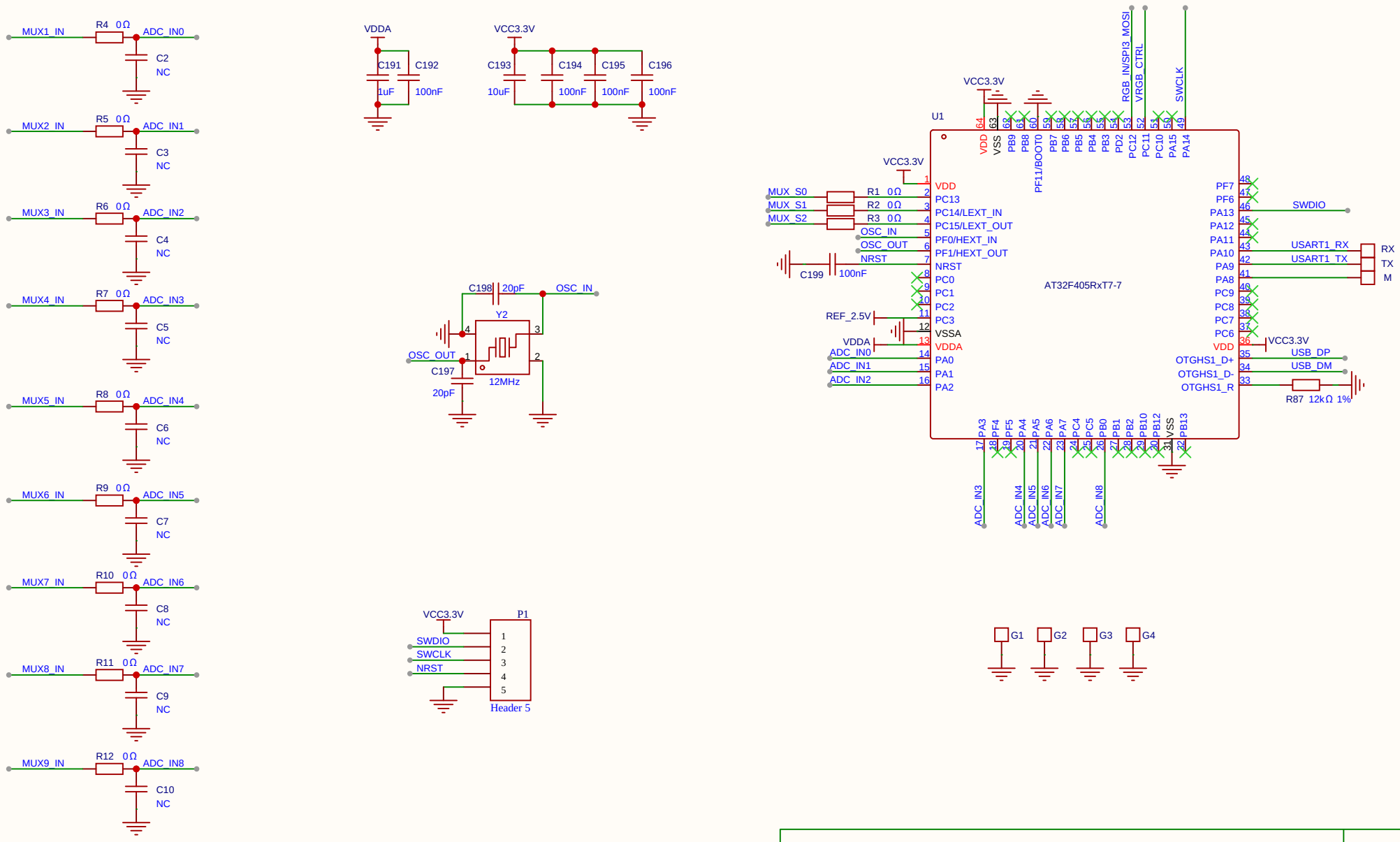

Project: AT32-Magnetic-Gaming-Keyboard		Ver: 1.0
Title: MCU		Page: 2
ARTERY	Company: Artery Technology	Size: A4
	Date: 2026-01-29	Drawed:

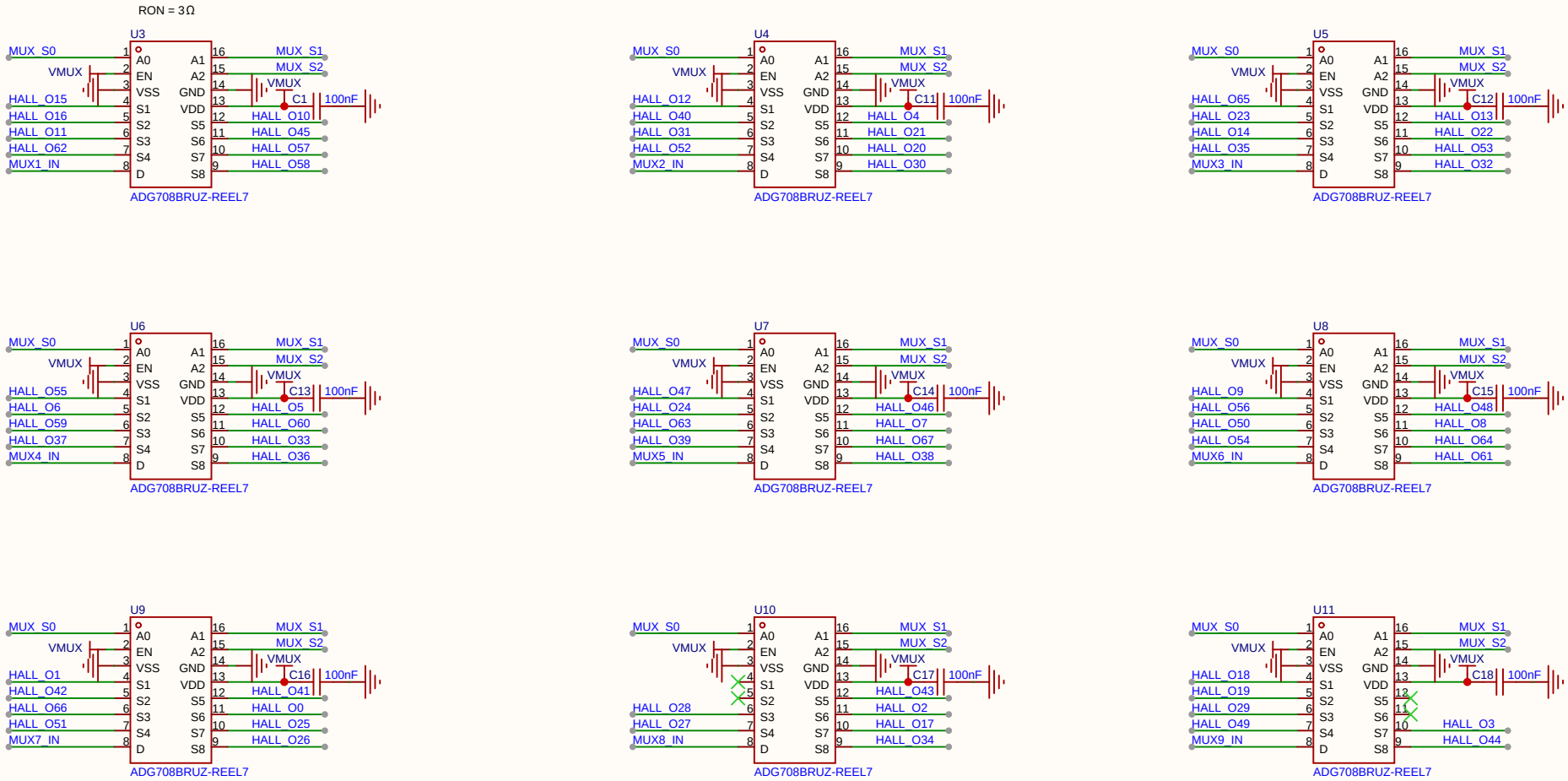

Project: AT32-Magnetic-Gaming-Keyboard		Ver: 1.0
Title: MUX		Page: 3
	Company: Artery Technology	Size: A4
	Date: 2026-01-29	Drawed:

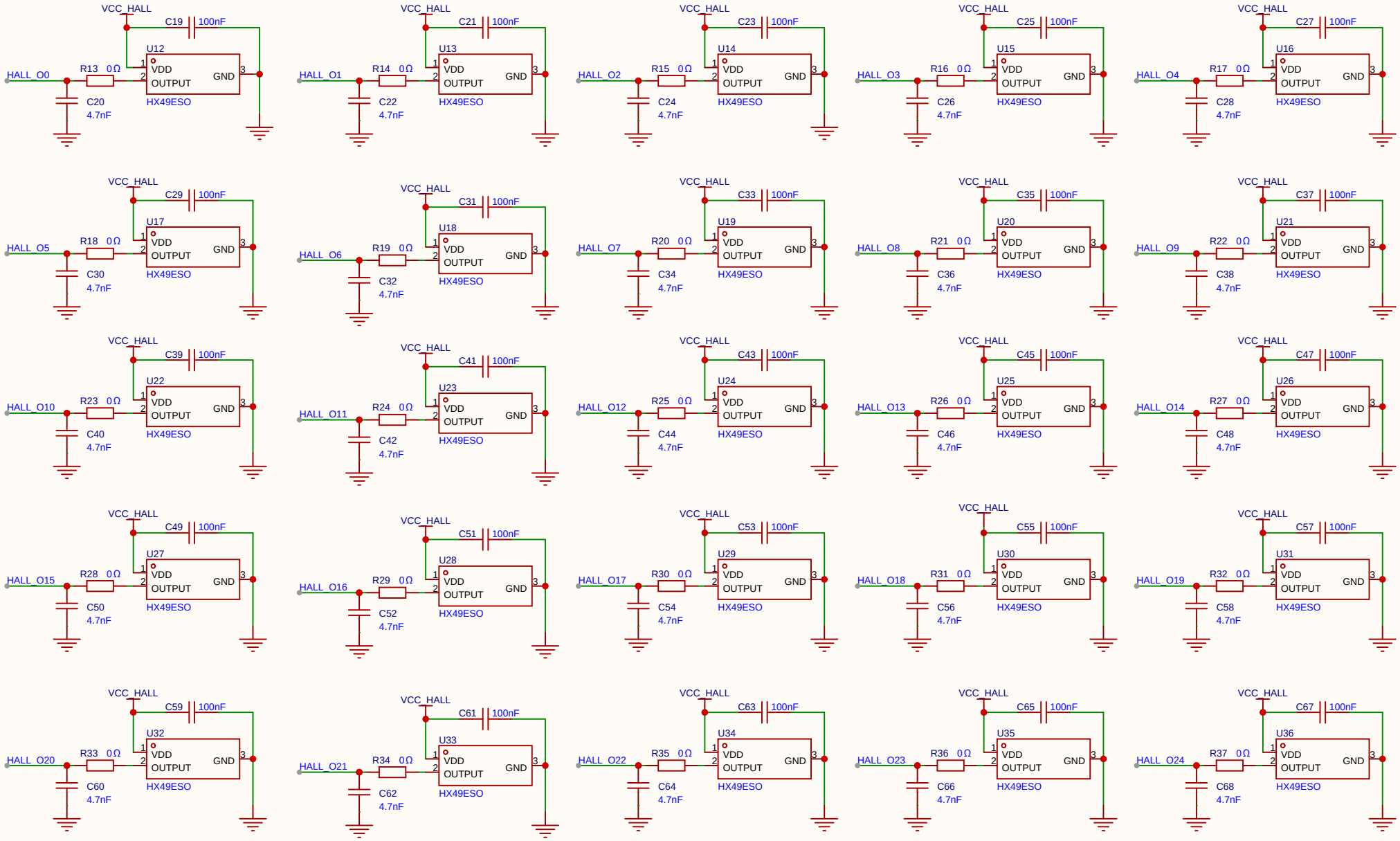

Project: AT32-Magnetic-Gaming-Keyboard		Ver: 1.0
Title: HALL1		Page: 4
ARTERY	Company: Artery Technology	Size: A4
	Date: 2026-02-06	Drawed:

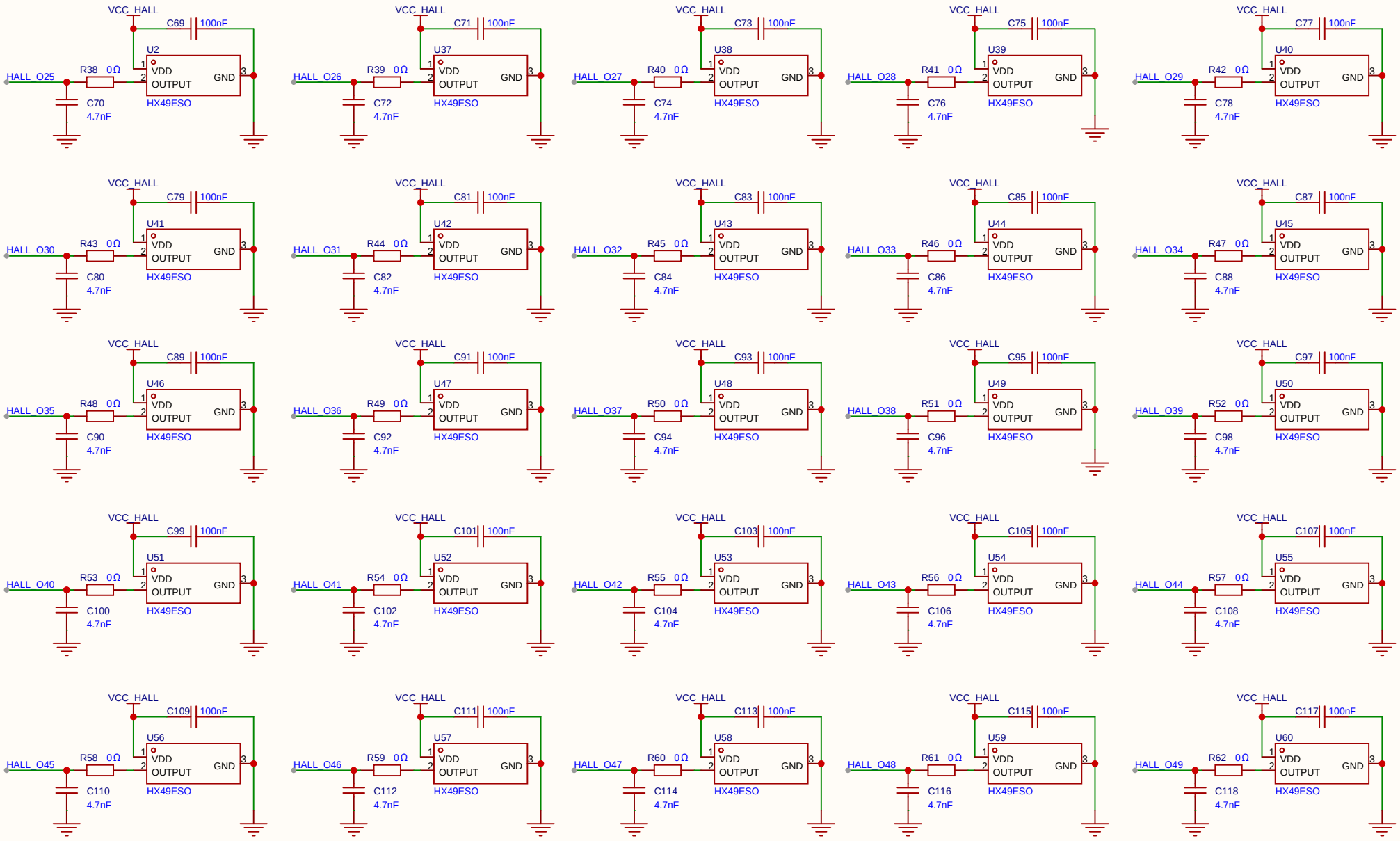

Project: AT32-Magnetic-Gaming-Keyboard		Ver: 1.0
Title: HALL2		Page: 5
	Company: Artery Technology	Size: A4
	Date: 2026-02-06	Drawed:

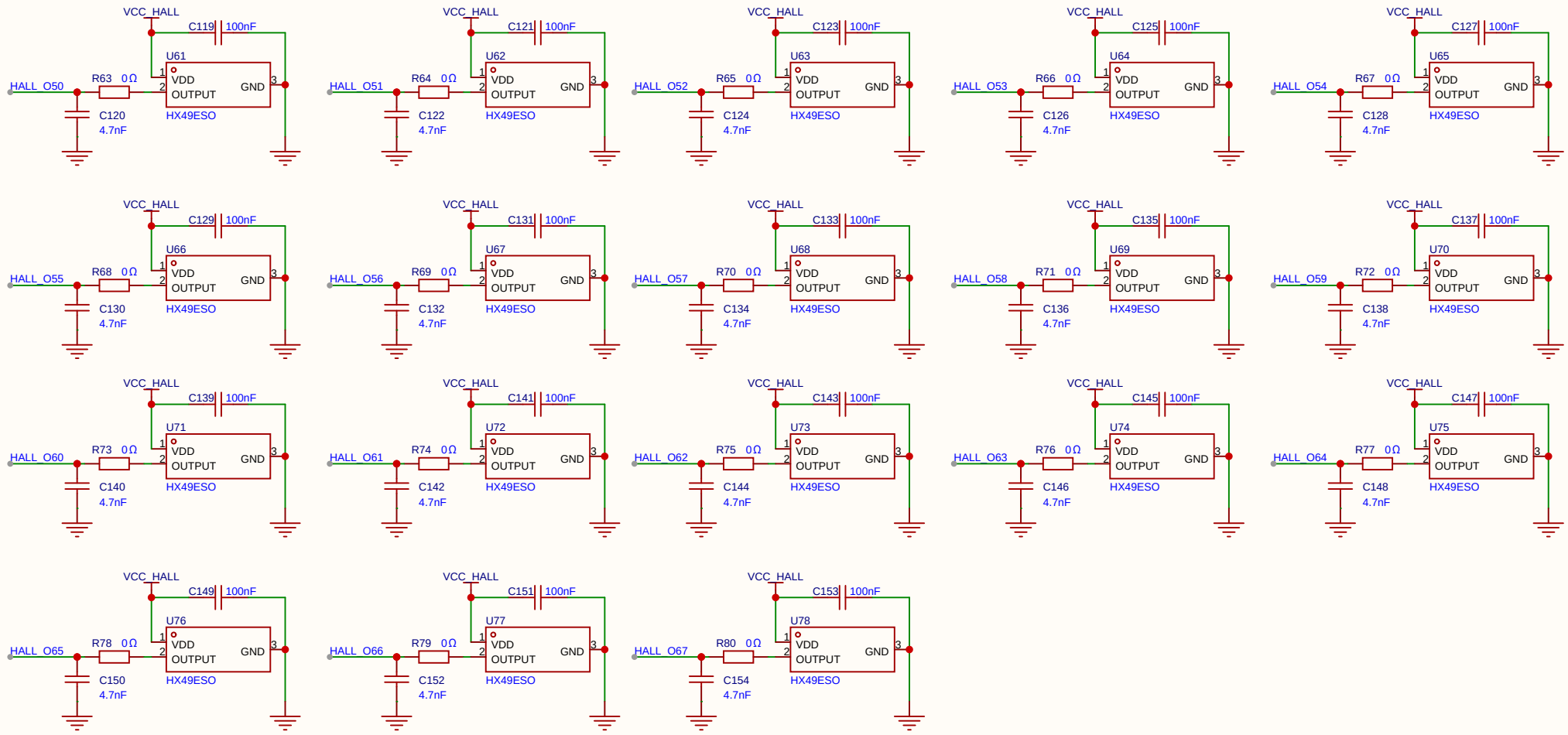

Project: AT32-Magnetic-Gaming-Keyboard		Ver: 1.0
Title: HALL3		Page: 6
ARTERY	Company: Artery Technology	Size: A4
	Date: 2026-02-06	Drawed:

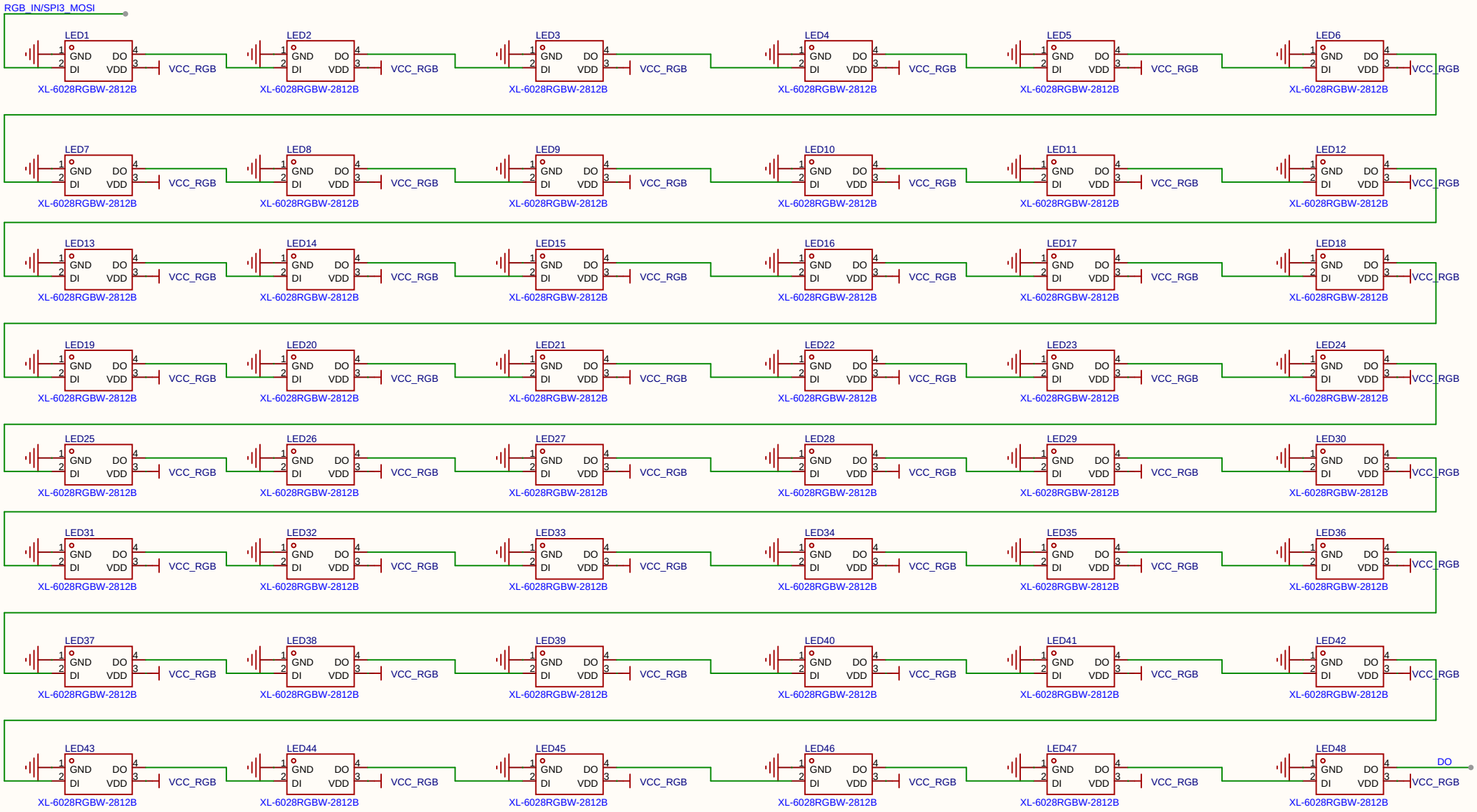

Project:	AT32-Magnetic-Gaming-Keyboard	Ver:	1.0
Title:	RGB1	Page:	7
	Company: Artery Technology	Size:	A4
	Date: 2026-01-29	Drawed:	

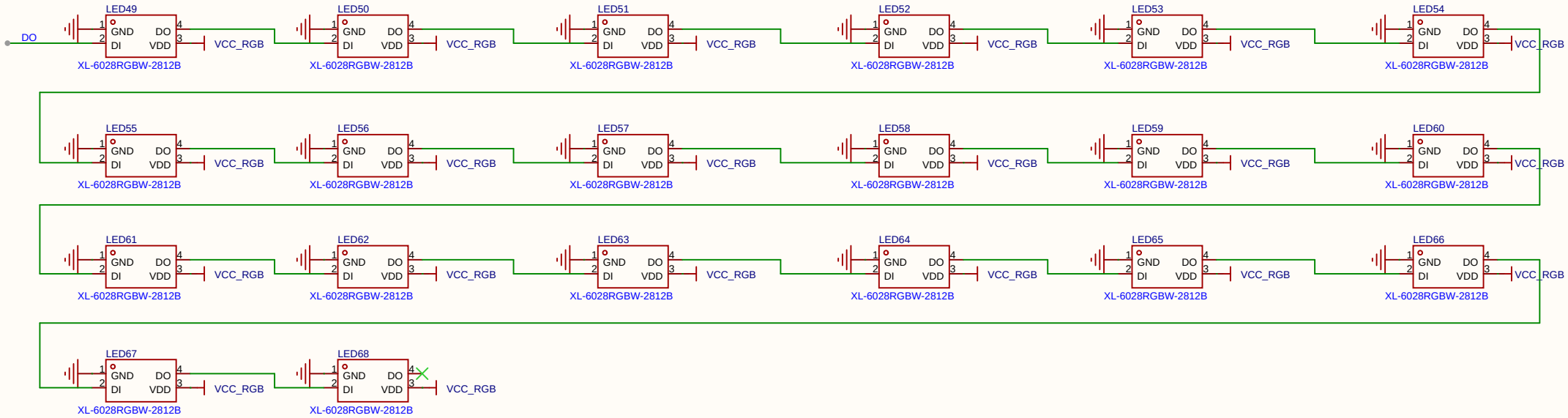

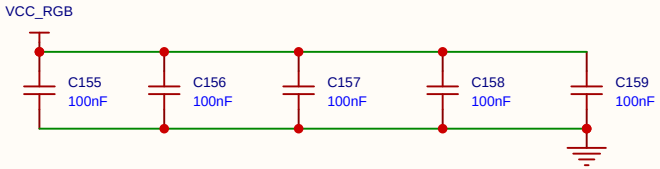

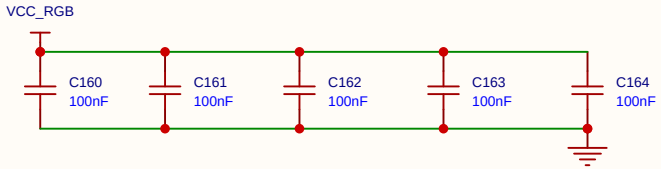

Project: AT32-Magnetic-Gaming-Keyboard		Ver: 1.0
Title: RGB2		Page: 8
	Company: Artery Technology	Size: A4
	Date: 2026-01-29	Drawed:

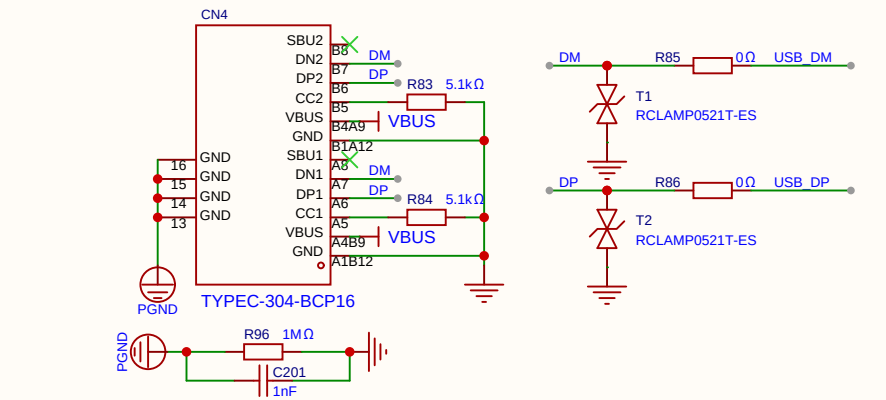

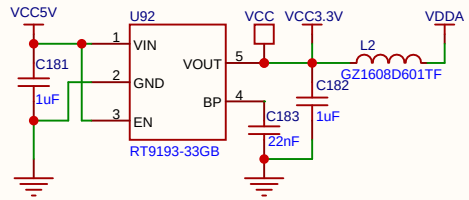

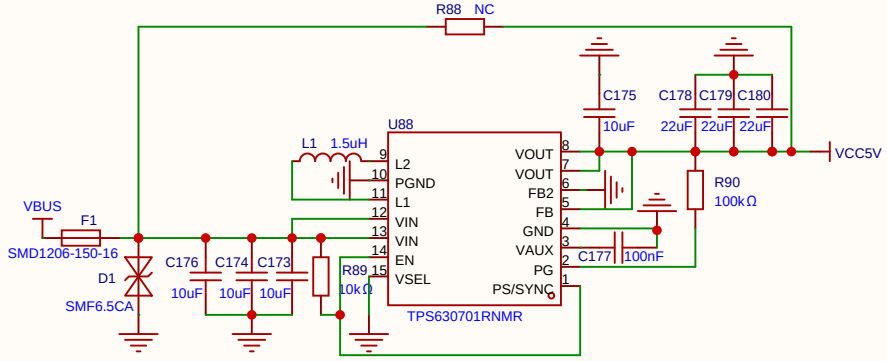

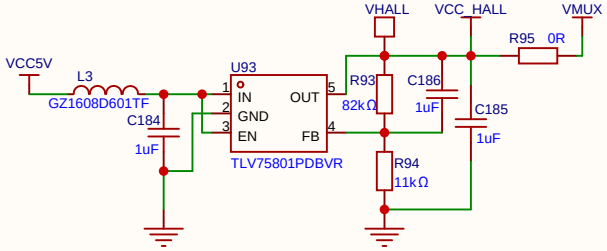

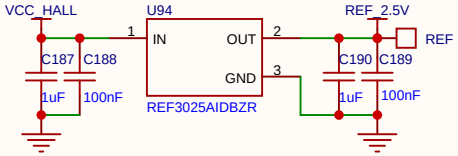

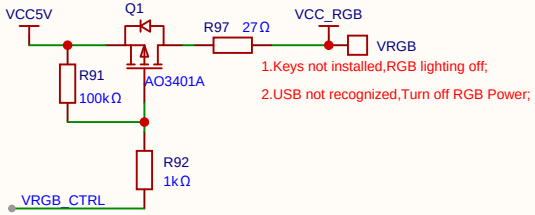

Project: AT32-Magnetic-Gaming-Keyboard		Ver: 1.0
Title: Power		Page: 9
ARTERY	Company: Artery Technology	Size: A4
	Date: 2026-02-05	Drawed: