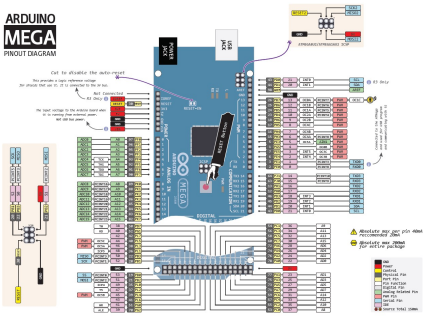
ARDUINO
MEGA
PINOUT DIAGRAM

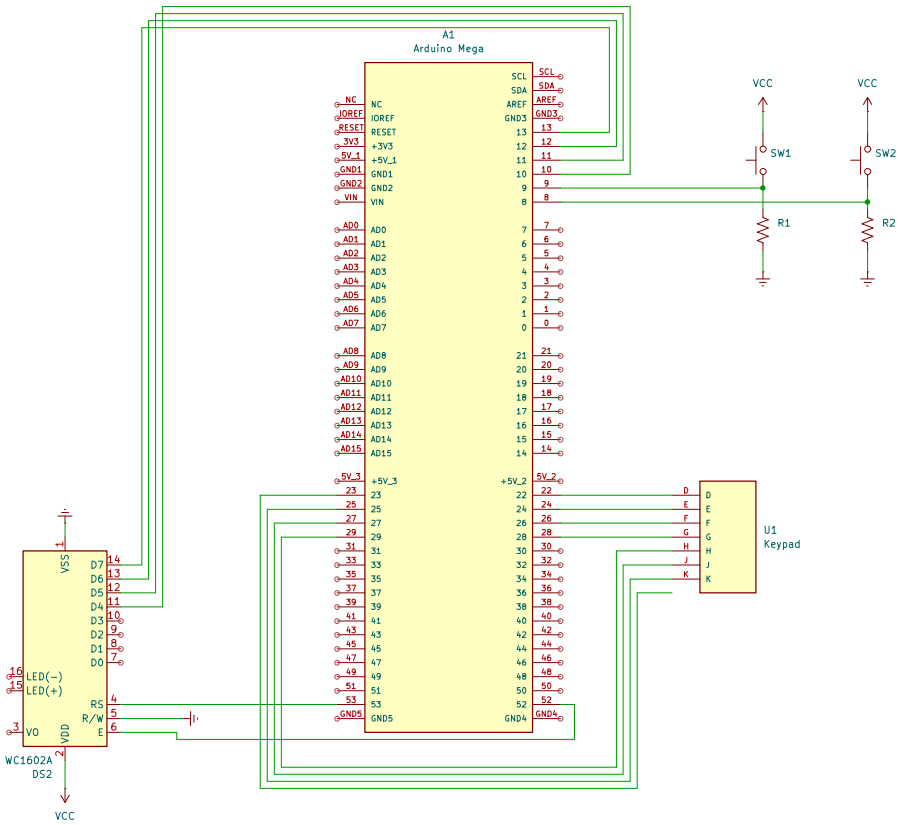
A1
Arduino Mega
VCC
VCC
SW1
SW2
R1
R2
U1
Keypad
WC1602A
DS2
VCC