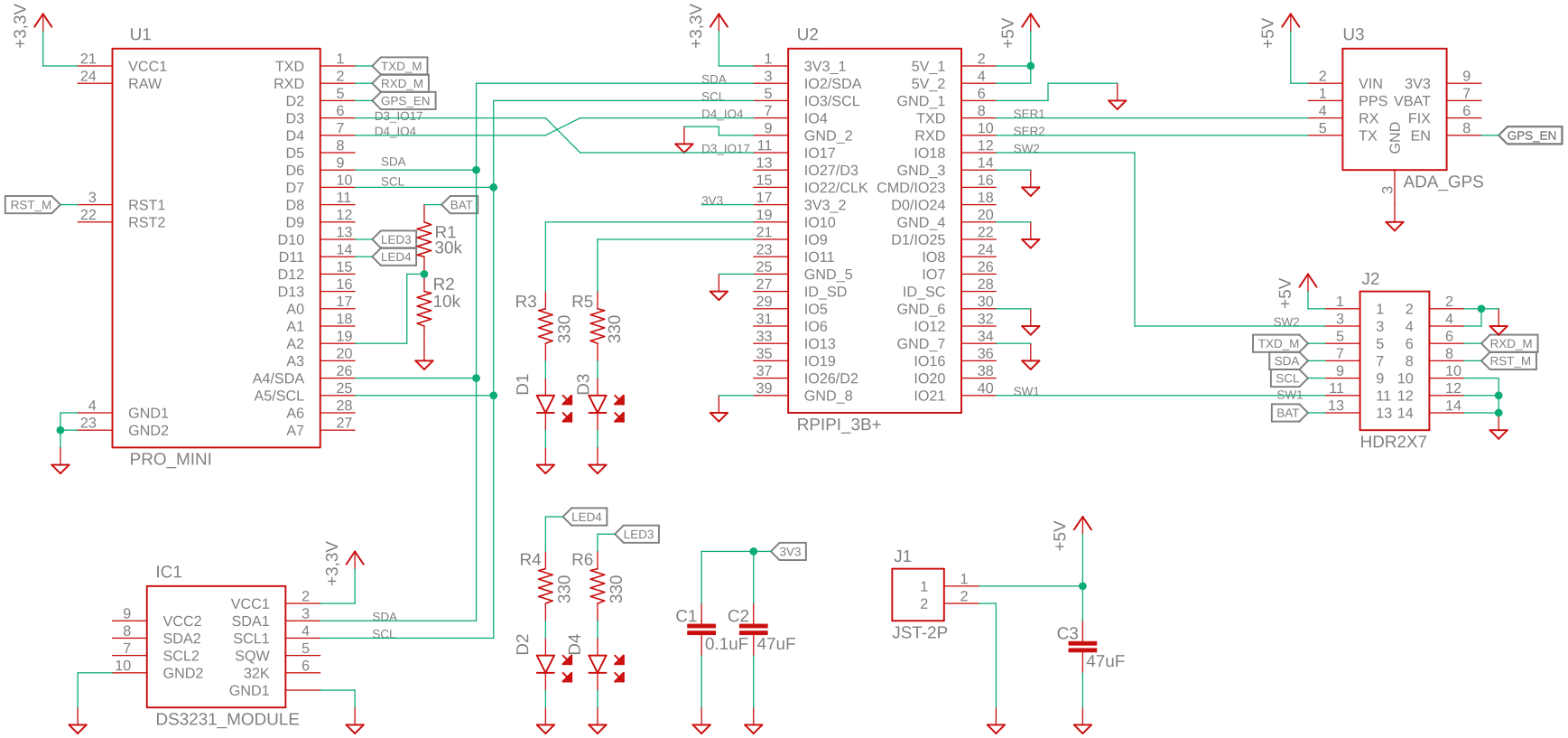

nscc

Line Camera Rev. A

2019-08-16 1:16 PM

Sheet: 2/2 A