2018

AP® CollegeBoard

AP Physics C: Electricity and Magnetism

Free-Response Questions

© 2018 The College Board. College Board, Advanced Placement Program, AP, AP Central, and the acorn logo are registered trademarks of the College Board. Visit the College Board on the Web: www.collegeboard.org.

AP Central is the official online home for the AP Program: apcentral.collegeboard.org.

ADVANCED PLACEMENT PHYSICS C TABLE OF INFORMATION

CONSTANTS AND CONVERSION FACTORS	
Proton mass, $m_p = 1.67 \times 10^{-27}$ kg	Electron charge magnitude, $e = 1.60 \times 10^{-19}$ C
Neutron mass, $m_n = 1.67 \times 10^{-27}$ kg	1 electron volt, $1 \text{ eV} = 1.60 \times 10^{-19}$ J
Electron mass, $m_e = 9.11 \times 10^{-31}$ kg	Speed of light, $c = 3.00 \times 10^{8}$ m/s
Avogadro's number, $N_0 = 6.02 \times 10^{23}$ mol^{-1}	Universal gravitational constant, $G = 6.67 \times 10^{-11} \left(\text{N}\cdot\text{m}^2\right)/\text{kg}^2$
Universal gas constant, $R = 8.31$ J/(mol•K)	Acceleration due to gravity at Earth's surface, $g = 9.8$ m/s^2
Boltzmann's constant, $k_B = 1.38 \times 10^{-23}$ J/K	

1 unified atomic mass unit,	$1 \text{ u} = 1.66 \times 10^{-27} \text{ kg} = 931 \text{ MeV}/c^2$
Planck's constant,	$h = 6.63 \times 10^{-34}$ J•s $= 4.14 \times 10^{-15}$ eV•s
	$hc = 1.99 \times 10^{-25}$ J•m $= 1.24 \times 10^{3}$ eV•nm
Vacuum permittivity,	$\varepsilon_0 = 8.85 \times 10^{-12} \text{ C}^2/\left(\text{N}\cdot\text{m}^2\right)$
Coulomb's law constant,	$k = 1/(4\pi\varepsilon_0) = 9.0 \times 10^{9} \left(\text{N}\cdot\text{m}^2\right)/\text{C}^2$
Vacuum permeability,	$\mu_0 = 4\pi \times 10^{-7}$ (T•m)/A
Magnetic constant,	$k' = \mu_0/(4\pi) = 1 \times 10^{-7}$ (T•m)/A
1 atmosphere pressure,	$1 \text{ atm} = 1.0 \times 10^{5} \text{ N/m}^2 = 1.0 \times 10^{5}$ Pa

UNIT SYMBOLS								
	meter,	m	mole,	mol	watt,	W	farad,	F
	kilogram,	kg	hertz,	Hz	coulomb,	C	tesla,	T
	second,	s	newton,	N	volt,	V	degree Celsius,	°C
	ampere,	A	pascal,	Pa	ohm,	Ω	electron volt,	eV
	kelvin,	K	joule,	J	henry,	H		

PREFIXES		
Factor	Prefix	Symbol
10^{9}	giga	G
10^{6}	mega	M
10^{3}	kilo	k
10^{-2}	centi	c
10^{-3}	milli	m
10^{-6}	micro	μ
10^{-9}	nano	n
10^{-12}	pico	p

VALUES OF TRIGONOMETRIC FUNCTIONS FOR COMMON ANGLES							
θ	0°	30°	37°	45°	53°	60°	90°
$\sin\theta$	0	$1/2$	$3/5$	$\sqrt{2}/2$	$4/5$	$\sqrt{3}/2$	1
$\cos\theta$	1	$\sqrt{3}/2$	$4/5$	$\sqrt{2}/2$	$3/5$	$1/2$	0
$\tan\theta$	0	$\sqrt{3}/3$	$3/4$	1	$4/3$	$\sqrt{3}$	∞

The following assumptions are used in this exam.

I. The frame of reference of any problem is inertial unless otherwise stated.
II. The direction of current is the direction in which positive charges would drift.
III. The electric potential is zero at an infinite distance from an isolated point charge.
IV. All batteries and meters are ideal unless otherwise stated.
V. Edge effects for the electric field of a parallel plate capacitor are negligible unless otherwise stated.

ADVANCED PLACEMENT PHYSICS C EQUATIONS

MECHANICS

$v_x = v_{x0} + a_x t$

$x = x_0 + v_{x0}t + \frac{1}{2}a_x t^2$

$v_x^2 = v_{x0}^2 + 2a_x(x - x_0)$

$\vec{a} = \frac{\sum \vec{F}}{m} = \frac{\vec{F}_{net}}{m}$

$\vec{F} = \frac{d\vec{p}}{dt}$

$\vec{J} = \int \vec{F}\,dt = \Delta\vec{p}$

$\vec{p} = m\vec{v}$

$|\vec{F}_f| \le \mu|\vec{F}_N|$

$\Delta E = W = \int \vec{F} \cdot d\vec{r}$

$K = \frac{1}{2}mv^2$

$P = \frac{dE}{dt}$

$P = \vec{F} \cdot \vec{v}$

$\Delta U_g = mg\Delta h$

$a_c = \frac{v^2}{r} = \omega^2 r$

$\vec{\tau} = \vec{r} \times \vec{F}$

$\vec{\alpha} = \frac{\sum \vec{\tau}}{I} = \frac{\vec{\tau}_{net}}{I}$

$I = \int r^2 dm = \sum mr^2$

$x_{cm} = \frac{\sum m_i x_i}{\sum m_i}$

$v = r\omega$

$\vec{L} = \vec{r} \times \vec{p} = I\vec{\omega}$

$K = \frac{1}{2}I\omega^2$

$\omega = \omega_0 + \alpha t$

$\theta = \theta_0 + \omega_0 t + \frac{1}{2}\alpha t^2$

a = acceleration
E = energy
F = force
f = frequency
h = height
I = rotational inertia
J = impulse
K = kinetic energy
k = spring constant
ℓ = length
L = angular momentum
m = mass
P = power
p = momentum
r = radius or distance
T = period
t = time
U = potential energy
v = velocity or speed
W = work done on a system
x = position
μ = coefficient of friction
θ = angle
τ = torque
ω = angular speed
α = angular acceleration
ϕ = phase angle

$\vec{F}_s = -k\Delta\vec{x}$

$U_s = \frac{1}{2}k(\Delta x)^2$

$x = x_{max}\cos(\omega t + \phi)$

$T = \frac{2\pi}{\omega} = \frac{1}{f}$

$T_s = 2\pi\sqrt{\frac{m}{k}}$

$T_p = 2\pi\sqrt{\frac{\ell}{g}}$

$|\vec{F}_G| = \frac{Gm_1m_2}{r^2}$

$U_G = -\frac{Gm_1m_2}{r}$

ELECTRICITY AND MAGNETISM

$|\vec{F}_E| = \frac{1}{4\pi\varepsilon_0}\left|\frac{q_1q_2}{r^2}\right|$

$\vec{E} = \frac{\vec{F}_E}{q}$

$\oint \vec{E} \cdot d\vec{A} = \frac{Q}{\varepsilon_0}$

$E_x = -\frac{dV}{dx}$

$\Delta V = -\int \vec{E} \cdot d\vec{r}$

$V = \frac{1}{4\pi\varepsilon_0}\sum_i \frac{q_i}{r_i}$

$U_E = qV = \frac{1}{4\pi\varepsilon_0}\frac{q_1q_2}{r}$

$\Delta V = \frac{Q}{C}$

$C = \frac{\kappa\varepsilon_0 A}{d}$

$C_p = \sum_i C_i$

$\frac{1}{C_s} = \sum_i \frac{1}{C_i}$

$I = \frac{dQ}{dt}$

$U_C = \frac{1}{2}Q\Delta V = \frac{1}{2}C(\Delta V)^2$

$R = \frac{\rho\ell}{A}$

$\vec{E} = \rho\vec{J}$

$I = Nev_d A$

$I = \frac{\Delta V}{R}$

$R_s = \sum_i R_i$

$\frac{1}{R_p} = \sum_i \frac{1}{R_i}$

$P = I\Delta V$

A = area
B = magnetic field
C = capacitance
d = distance
E = electric field
$\mathcal{E}$ = emf
F = force
I = current
J = current density
L = inductance
ℓ = length
n = number of loops of wire per unit length
N = number of charge carriers per unit volume
P = power
Q = charge
q = point charge
R = resistance
r = radius or distance
t = time
U = potential or stored energy
V = electric potential
v = velocity or speed
ρ = resistivity
Φ = flux
κ = dielectric constant

$\vec{F}_M = q\vec{v} \times \vec{B}$

$\oint \vec{B} \cdot d\vec{\ell} = \mu_0 I$

$d\vec{B} = \frac{\mu_0}{4\pi}\frac{I\,d\vec{\ell} \times \hat{r}}{r^2}$

$\vec{F} = \int I\,d\vec{\ell} \times \vec{B}$

$B_s = \mu_0 nI$

$\Phi_B = \int \vec{B} \cdot d\vec{A}$

$\mathcal{E} = \oint \vec{E} \cdot d\vec{\ell} = -\frac{d\Phi_B}{dt}$

$\mathcal{E} = -L\frac{dI}{dt}$

$U_L = \frac{1}{2}LI^2$

ADVANCED PLACEMENT PHYSICS C EQUATIONS

GEOMETRY AND TRIGONOMETRY

Rectangle

$A = bh$

Triangle

$A = \frac{1}{2}bh$

Circle

$A = \pi r^2$

$C = 2\pi r$

$s = r\theta$

Rectangular Solid

$V = \ell wh$

Cylinder

$V = \pi r^2 \ell$

$S = 2\pi r\ell + 2\pi r^2$

Sphere

$V = \frac{4}{3}\pi r^3$

$S = 4\pi r^2$

Right Triangle

$a^2 + b^2 = c^2$

$\sin\theta = \frac{a}{c}$

$\cos\theta = \frac{b}{c}$

$\tan\theta = \frac{a}{b}$

A = area
C = circumference
V = volume
S = surface area
b = base
h = height
ℓ = length
w = width
r = radius
s = arc length
θ = angle

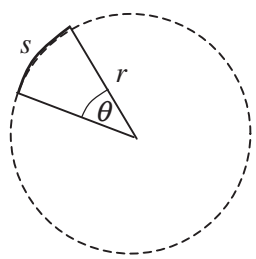

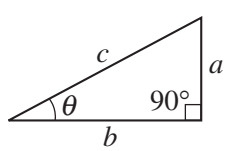

CALCULUS

$$\frac{df}{dx} = \frac{df}{du}\frac{du}{dx}$$

$$\frac{d}{dx}\left(x^n\right) = nx^{n-1}$$

$$\frac{d}{dx}\left(e^{ax}\right) = ae^{ax}$$

$$\frac{d}{dx}(\ln ax) = \frac{1}{x}$$

$$\frac{d}{dx}[\sin(ax)] = a\cos(ax)$$

$$\frac{d}{dx}[\cos(ax)] = -a\sin(ax)$$

$$\int x^n\,dx = \frac{1}{n+1}x^{n+1},\ n \neq -1$$

$$\int e^{ax}\,dx = \frac{1}{a}e^{ax}$$

$$\int \frac{dx}{x+a} = \ln|x+a|$$

$$\int \cos(ax)\,dx = \frac{1}{a}\sin(ax)$$

$$\int \sin(ax)\,dx = -\frac{1}{a}\cos(ax)$$

VECTOR PRODUCTS

$$\vec{A}\bullet\vec{B} = AB\cos\theta$$

$$\left|\vec{A}\times\vec{B}\right| = AB\sin\theta$$

PHYSICS C: ELECTRICITY AND MAGNETISM

SECTION II
Time—45 minutes
3 Questions

Directions: Answer all three questions. The suggested time is about 15 minutes for answering each of the questions, which are worth 15 points each. The parts within a question may not have equal weight. Show all your work in this booklet in the spaces provided after each part.

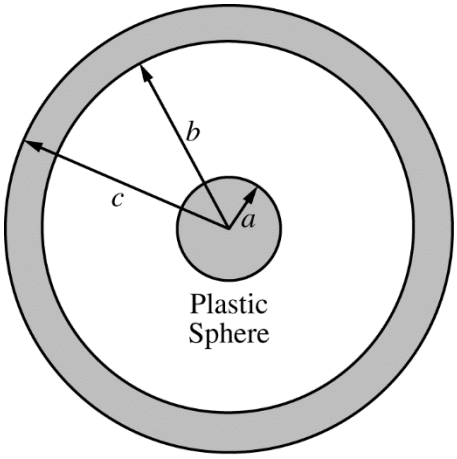

Conducting Spherical Shell

1. A solid plastic sphere of radius a and a conducting spherical shell of inner radius b and outer radius c are shown in the figure above. The shell has an unknown charge. The solid plastic sphere has a charge per unit volume given by $\rho(r) = \beta r$, where β is a positive constant and r is the distance from the center of the sphere. Express your answers to parts (a), (b), and (c) in terms of β, r, a, and physical constants, as appropriate.

   (a) Consider a Gaussian sphere of radius r concentric with the plastic sphere. Derive an expression for the charge enclosed by the Gaussian sphere for the following regions.

      i. $r < a$

      ii. $a < r < b$

   (b) Use Gauss's law to derive an expression for the magnitude of the electric field in the following regions.

      i. $r < a$

      ii. $a < r < b$

   (c) At any point outside of the conducting shell, it is observed that the magnitude of the electric field is zero.

      i. Determine the charge on the inner surface of the conducting shell.

      Justify your answer.

      ii. Determine the charge on the outer surface of the conducting shell.

© 2018 The College Board.
Visit the College Board on the Web: www.collegeboard.org.

(d)

i. On the axes below, sketch the electric field E as a function of distance r from the center of the sphere. Sketch the graph for the range $r = 0$ at the center of the sphere to $r = c$ at the outside of the conducting shell.

ii. The figure below shows the sphere and shell with four points labeled W, X, Y, and Z. Point W is at the center of the sphere, point X is on the surface of the sphere, and points Y and Z are on the inner and outer surface of the shell, respectively. Rank the points according to the electric potential at that point, with 1 indicating the largest electric potential. If two points have the same electric potential, give them the same numerical ranking.

____ W ____ X ____ Y ____ Z

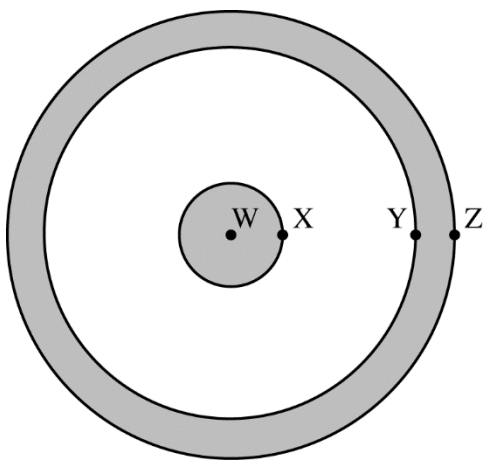

© 2018 The College Board.
Visit the College Board on the Web: www.collegeboard.org.

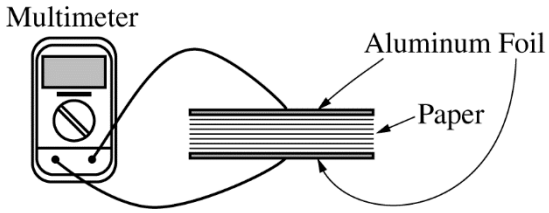

2. An experiment is designed to measure the dielectric constant of paper that has an area $A = 0.060\ \text{m}^2$. Using aluminum foil, two parallel plates are created with the same area as the paper. Five hundred sheets of paper are placed between the aluminum foil plates to create a parallel plate capacitor, as shown in the figure above. Using a multimeter, the capacitance C of the capacitor is measured. The number of sheets and the total thickness d of the stack of paper are recorded. The experiment is repeated, reducing the number of sheets of paper each time. The data are recorded in the table below.

Sheets of Paper	d (m)	C (F)		
500	0.045	6.5×10^{-11}		
400	0.036	7.4×10^{-11}		
300	0.027	8.9×10^{-11}		
200	0.018	11.9×10^{-11}		
100	0.010	21.0×10^{-11}		

(a) Indicate below which quantities should be graphed to yield a straight line whose slope could be used to calculate a numerical value for the dielectric constant of the paper.

Vertical axis: _____

Horizontal axis: _____

Use the remaining columns in the table above, as needed, to record any quantities that you indicated that are not given. Label each column you use and include units.

© 2018 The College Board.
Visit the College Board on the Web: www.collegeboard.org.

(b) Plot the data points for the quantities indicated in part (a) on the graph below. Clearly scale and label all axes, including units if appropriate. Draw a straight line that best represents the data.

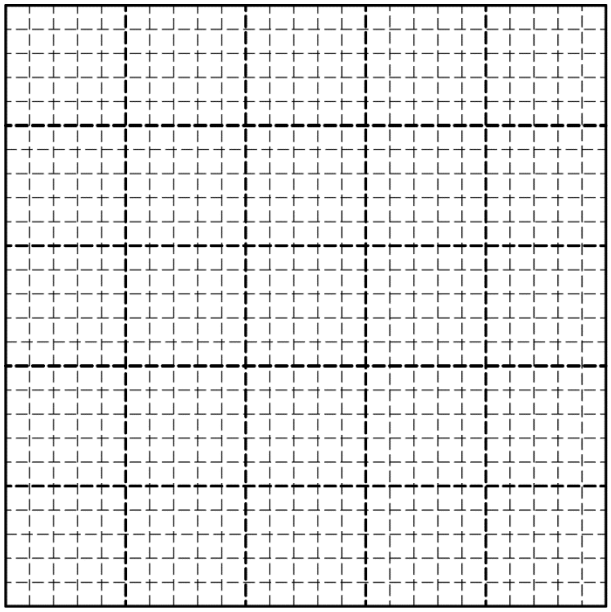

(c) Using the straight line, calculate a dielectric constant for the paper.

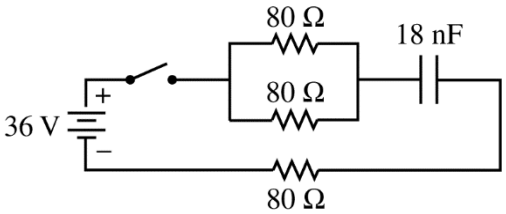

The student now makes a capacitor using the same aluminum foil plates and just one sheet of paper. Using the experimentally determined dielectric constant, the student calculates the capacitance to be 18 nF. The student uses this uncharged capacitor to build a circuit using wire, a 36 V battery, 3 identical 80 Ω resistors, and an open switch, as shown in the figure above.

(d) Calculate the current in the battery immediately after the switch is closed.

(e) Determine the time constant for this circuit.

(f) Students A and B measure the time it takes after the switch is closed for the voltage across the capacitor to reach half its maximum value and find that it is longer than expected.

i. Student A assumes that the capacitance value is correct. Would Student A conclude that the resistance value is larger or smaller than measured?

____ Larger than measured ____ Smaller than measured

Explain experimentally what could account for this.

ii. Student B assumes that the resistance value is correct. Would Student B conclude that the capacitance value is larger or smaller than measured?

____ Larger than measured ____ Smaller than measured

Explain experimentally what could account for this.

© 2018 The College Board.
Visit the College Board on the Web: www.collegeboard.org.

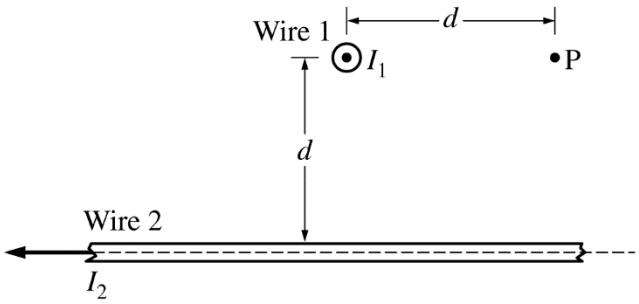

Figure 1. Side view

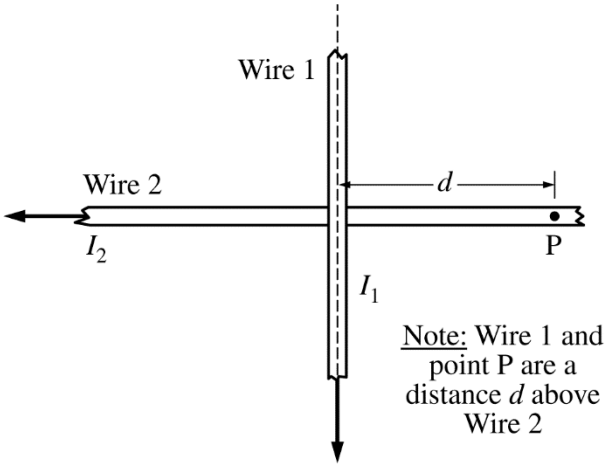

Figure 2. Top view

3. The figures above represent different views of two long, straight, horizontal wires, 1 and 2, carrying currents $I_1 = I$ and $I_2 = 2I$, respectively, in the directions shown. The wires are held in place. In Figure 1, the current in wire 1 is directed out of the page, and wire 1 is a distance d above wire 2. Point P is a horizontal distance d from wire 1 and a distance d directly above wire 2. Express your answers to parts (a) and (b) in terms of I, d, and physical constants, as appropriate.

(a) Use Ampere's law to derive an expression for the magnitude of the magnetic field at point P due to wire 1.

(b) Derive an expression for the magnitude of the net magnetic field at point P.

(c) Calculate the numerical value of the angle to the horizontal for the direction of the net magnetic field at point P.

(d) Wire 1 is now released. Which of the following best describes the initial motion of wire 1 due to the magnetic field of wire 2 ? Assume gravitational effects are negligible.

____ Wire 1 will not move.

____ Wire 1 will move upward as viewed in Figure 1.

____ Wire 1 will move downward as viewed in Figure 1.

____ Wire 1 will rotate clockwise as viewed in Figure 2.

____ Wire 1 will rotate counterclockwise as viewed in Figure 2.

Justify your answer.

© 2018 The College Board.
Visit the College Board on the Web: www.collegeboard.org.

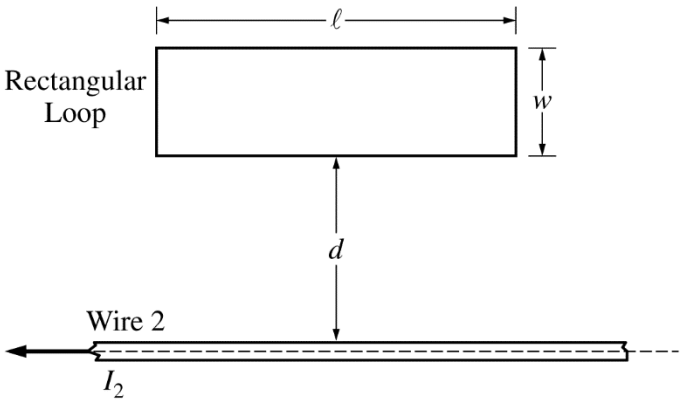

Figure 3. Side view

Wire 1 is now replaced by a conducting rectangular loop of length ℓ, width w, and resistance R. The loop is placed a distance d from wire 2, as shown. The loop, wire, and distance d are all in the plane of the page. The long side of the loop is parallel to the wire. The current I_2 for wire 2 is decreasing linearly as a function of time t according to the equation $I_2 = 2I_0(1 - kt)$, where k is a positive constant with units of s^{-1}.

(e) Of the following, select the integration that will give an expression for the flux Φ as a function of time t.

____ $\Phi = \int_{r=d}^{r=d+w} \frac{\mu_0 (2I_0)(1-kt)\ell w}{2\pi} dr$

____ $\Phi = \int_{r=d}^{r=w} \frac{\mu_0 (2I_0)(1-kt)\ell w}{2\pi} dr$

____ $\Phi = \int_{r=d}^{r=d+w} \frac{\mu_0 (2I_0)(1-kt)}{2\pi r} \ell dr$

____ $\Phi = \int_{r=d}^{r=w} \frac{\mu_0 (2I_0)(1-kt)}{2\pi r} \ell dr$

(f) Given that the flux through the rectangular loop as a function of time t is given by the equation $\Phi = \frac{\mu_0 I_0 \ell (1-kt)}{\pi} \ln\left(\frac{d+w}{d}\right)$, derive an expression for the magnitude of the current, if any, induced in the loop. Express your answers in terms of I_0, d, r, R, w, k, ℓ, and physical constants, as appropriate.

(g) What is the direction of the current, if any, induced in the loop as seen in Figure 3 ?

____ Clockwise ____ Counterclockwise

____ Undefined, because there is no current induced in the loop

Justify your answer.

STOP

END OF EXAM

© 2018 The College Board.
Visit the College Board on the Web: www.collegeboard.org.