2023

AP® Physics C: Electricity and Magnetism

Free-Response Questions Set 2

© 2023 College Board. College Board, Advanced Placement, AP, AP Central, and the acorn logo are registered trademarks of College Board. Visit College Board on the web: collegeboard.org.

AP Central is the official online home for the AP Program: apcentral.collegeboard.org.

ADVANCED PLACEMENT PHYSICS C TABLE OF INFORMATION

CONSTANTS AND CONVERSION FACTORS	
Proton mass, $m_p = 1.67 \times 10^{-27}$ kg	Electron charge magnitude, $e = 1.60 \times 10^{-19}$ C
Neutron mass, $m_n = 1.67 \times 10^{-27}$ kg	1 electron volt, $1 \text{ eV} = 1.60 \times 10^{-19}$ J
Electron mass, $m_e = 9.11 \times 10^{-31}$ kg	Speed of light, $c = 3.00 \times 10^{8}$ m/s
Avogadro's number, $N_0 = 6.02 \times 10^{23}$ mol^{-1}	Universal gravitational constant, $G = 6.67 \times 10^{-11} \left(\text{N}\cdot\text{m}^2\right)/\text{kg}^2$
Universal gas constant, $R = 8.31$ J/(mol•K)	Acceleration due to gravity at Earth's surface, $g = 9.8$ m/s^2
Boltzmann's constant, $k_B = 1.38 \times 10^{-23}$ J/K	

1 unified atomic mass unit,	$1 \text{ u} = 1.66 \times 10^{-27} \text{ kg} = 931 \text{ MeV}/c^2$
Planck's constant,	$h = 6.63 \times 10^{-34}$ J•s $= 4.14 \times 10^{-15}$ eV•s
	$hc = 1.99 \times 10^{-25}$ J•m $= 1.24 \times 10^{3}$ eV•nm
Vacuum permittivity,	$\varepsilon_0 = 8.85 \times 10^{-12} \text{ C}^2/\left(\text{N}\cdot\text{m}^2\right)$
Coulomb's law constant,	$k = 1/(4\pi\varepsilon_0) = 9.0 \times 10^{9} \left(\text{N}\cdot\text{m}^2\right)/\text{C}^2$
Vacuum permeability,	$\mu_0 = 4\pi \times 10^{-7}$ (T•m)/A
Magnetic constant,	$k' = \mu_0/(4\pi) = 1 \times 10^{-7}$ (T•m)/A
1 atmosphere pressure,	$1 \text{ atm} = 1.0 \times 10^{5} \text{ N/m}^2 = 1.0 \times 10^{5}$ Pa

UNIT SYMBOLS								
	meter,	m	mole,	mol	watt,	W	farad,	F
	kilogram,	kg	hertz,	Hz	coulomb,	C	tesla,	T
	second,	s	newton,	N	volt,	V	degree Celsius,	°C
	ampere,	A	pascal,	Pa	ohm,	Ω	electron volt,	eV
	kelvin,	K	joule,	J	henry,	H		

PREFIXES		
Factor	Prefix	Symbol
10^{9}	giga	G
10^{6}	mega	M
10^{3}	kilo	k
10^{-2}	centi	c
10^{-3}	milli	m
10^{-6}	micro	μ
10^{-9}	nano	n
10^{-12}	pico	p

VALUES OF TRIGONOMETRIC FUNCTIONS FOR COMMON ANGLES							
θ	0°	30°	37°	45°	53°	60°	90°
$\sin\theta$	0	1/2	3/5	$\sqrt{2}/2$	4/5	$\sqrt{3}/2$	1
$\cos\theta$	1	$\sqrt{3}/2$	4/5	$\sqrt{2}/2$	3/5	1/2	0
$\tan\theta$	0	$\sqrt{3}/3$	3/4	1	4/3	$\sqrt{3}$	∞

The following assumptions are used in this exam.

I. The frame of reference of any problem is inertial unless otherwise stated.
II. The direction of current is the direction in which positive charges would drift.
III. The electric potential is zero at an infinite distance from an isolated point charge.
IV. All batteries and meters are ideal unless otherwise stated.
V. Edge effects for the electric field of a parallel plate capacitor are negligible unless otherwise stated.

ADVANCED PLACEMENT PHYSICS C EQUATIONS

MECHANICS

$v_x = v_{x0} + a_x t$

$x = x_0 + v_{x0} t + \frac{1}{2} a_x t^2$

$v_x^2 = v_{x0}^2 + 2a_x (x - x_0)$

$\vec{a} = \frac{\sum \vec{F}}{m} = \frac{\vec{F}_{net}}{m}$

$\vec{F} = \frac{d\vec{p}}{dt}$

$\vec{J} = \int \vec{F}\, dt = \Delta\vec{p}$

$\vec{p} = m\vec{v}$

$|\vec{F}_f| \le \mu |\vec{F}_N|$

$\Delta E = W = \int \vec{F} \cdot d\vec{r}$

$K = \frac{1}{2} m v^2$

$P = \frac{dE}{dt}$

$P = \vec{F} \cdot \vec{v}$

$\Delta U_g = mg\Delta h$

$a_c = \frac{v^2}{r} = \omega^2 r$

$\vec{\tau} = \vec{r} \times \vec{F}$

$\vec{\alpha} = \frac{\sum \vec{\tau}}{I} = \frac{\vec{\tau}_{net}}{I}$

$I = \int r^2 dm = \sum m r^2$

$x_{cm} = \frac{\sum m_i x_i}{\sum m_i}$

$v = r\omega$

$\vec{L} = \vec{r} \times \vec{p} = I\vec{\omega}$

$K = \frac{1}{2} I \omega^2$

$\omega = \omega_0 + \alpha t$

$\theta = \theta_0 + \omega_0 t + \frac{1}{2}\alpha t^2$

a = acceleration
E = energy
F = force
f = frequency
h = height
I = rotational inertia
J = impulse
K = kinetic energy
k = spring constant
ℓ = length
L = angular momentum
m = mass
P = power
p = momentum
r = radius or distance
T = period
t = time
U = potential energy
v = velocity or speed
W = work done on a system
x = position
μ = coefficient of friction
θ = angle
τ = torque
ω = angular speed
α = angular acceleration
ϕ = phase angle

$\vec{F}_s = -k\Delta\vec{x}$

$U_s = \frac{1}{2} k (\Delta x)^2$

$x = x_{\max} \cos(\omega t + \phi)$

$T = \frac{2\pi}{\omega} = \frac{1}{f}$

$T_s = 2\pi\sqrt{\frac{m}{k}}$

$T_p = 2\pi\sqrt{\frac{\ell}{g}}$

$|\vec{F}_G| = \frac{G m_1 m_2}{r^2}$

$U_G = -\frac{G m_1 m_2}{r}$

ELECTRICITY AND MAGNETISM

$|\vec{F}_E| = \frac{1}{4\pi\varepsilon_0} \left| \frac{q_1 q_2}{r^2} \right|$

$\vec{E} = \frac{\vec{F}_E}{q}$

$\oint \vec{E} \cdot d\vec{A} = \frac{Q}{\varepsilon_0}$

$E_x = -\frac{dV}{dx}$

$\Delta V = -\int \vec{E} \cdot d\vec{r}$

$V = \frac{1}{4\pi\varepsilon_0} \sum_i \frac{q_i}{r_i}$

$U_E = qV = \frac{1}{4\pi\varepsilon_0} \frac{q_1 q_2}{r}$

$\Delta V = \frac{Q}{C}$

$C = \frac{\kappa \varepsilon_0 A}{d}$

$C_p = \sum_i C_i$

$\frac{1}{C_s} = \sum_i \frac{1}{C_i}$

$I = \frac{dQ}{dt}$

$U_C = \frac{1}{2} Q\Delta V = \frac{1}{2} C (\Delta V)^2$

$R = \frac{\rho \ell}{A}$

$\vec{E} = \rho \vec{J}$

$I = Nev_d A$

$I = \frac{\Delta V}{R}$

$R_s = \sum_i R_i$

$\frac{1}{R_p} = \sum_i \frac{1}{R_i}$

$P = I\Delta V$

A = area
B = magnetic field
C = capacitance
d = distance
E = electric field
$\mathcal{E}$ = emf
F = force
I = current
J = current density
L = inductance
ℓ = length
n = number of loops of wire per unit length
N = number of charge carriers per unit volume
P = power
Q = charge
q = point charge
R = resistance
r = radius or distance
t = time
U = potential or stored energy
V = electric potential
v = velocity or speed
ρ = resistivity
Φ = flux
κ = dielectric constant

$\vec{F}_M = q\vec{v} \times \vec{B}$

$\oint \vec{B} \cdot d\vec{\ell} = \mu_0 I$

$d\vec{B} = \frac{\mu_0}{4\pi} \frac{I\, d\vec{\ell} \times \hat{r}}{r^2}$

$\vec{F} = \int I\, d\vec{\ell} \times \vec{B}$

$B_s = \mu_0 n I$

$\Phi_B = \int \vec{B} \cdot d\vec{A}$

$\mathcal{E} = \oint \vec{E} \cdot d\vec{\ell} = -\frac{d\Phi_B}{dt}$

$\mathcal{E} = -L\frac{dI}{dt}$

$U_L = \frac{1}{2} L I^2$

ADVANCED PLACEMENT PHYSICS C EQUATIONS

GEOMETRY AND TRIGONOMETRY

Rectangle

$A = bh$

Triangle

$A = \frac{1}{2}bh$

Circle

$A = \pi r^2$

$C = 2\pi r$

$s = r\theta$

Rectangular Solid

$V = \ell wh$

Cylinder

$V = \pi r^2 \ell$

$S = 2\pi r\ell + 2\pi r^2$

Sphere

$V = \frac{4}{3}\pi r^3$

$S = 4\pi r^2$

A = area
C = circumference
V = volume
S = surface area
b = base
h = height
ℓ = length
w = width
r = radius
s = arc length
θ = angle

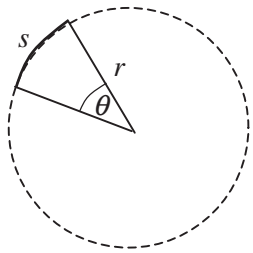

Right Triangle

$a^2 + b^2 = c^2$

$\sin\theta = \frac{a}{c}$

$\cos\theta = \frac{b}{c}$

$\tan\theta = \frac{a}{b}$

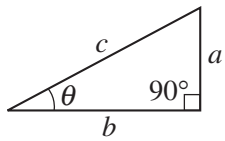

CALCULUS

$$\frac{df}{dx} = \frac{df}{du}\frac{du}{dx}$$

$$\frac{d}{dx}\left(x^n\right) = nx^{n-1}$$

$$\frac{d}{dx}\left(e^{ax}\right) = ae^{ax}$$

$$\frac{d}{dx}(\ln ax) = \frac{1}{x}$$

$$\frac{d}{dx}[\sin(ax)] = a\cos(ax)$$

$$\frac{d}{dx}[\cos(ax)] = -a\sin(ax)$$

$$\int x^n\,dx = \frac{1}{n+1}x^{n+1},\ n \neq -1$$

$$\int e^{ax}\,dx = \frac{1}{a}e^{ax}$$

$$\int \frac{dx}{x+a} = \ln|x+a|$$

$$\int \cos(ax)\,dx = \frac{1}{a}\sin(ax)$$

$$\int \sin(ax)\,dx = -\frac{1}{a}\cos(ax)$$

VECTOR PRODUCTS

$\vec{A}\bullet\vec{B} = AB\cos\theta$

$\left|\vec{A}\times\vec{B}\right| = AB\sin\theta$

Begin your response to **QUESTION 1** on this page.

PHYSICS C: ELECTRICITY AND MAGNETISM

SECTION II

Time—45 minutes

3 Questions

Directions: Answer all three questions. The suggested time is about 15 minutes for answering each of the questions, which are worth 15 points each. The parts within a question may not have equal weight. Show all your work in this booklet in the spaces provided after each part.

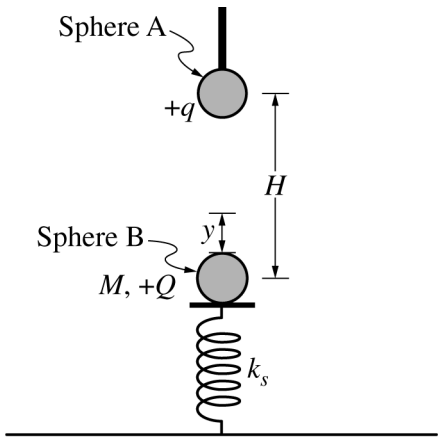

Note: Figure not drawn to scale.

1. Students perform an experiment to determine the value of vacuum permittivity ε_0. Sphere A is nonconducting with charge $+q$ and is attached to an insulating rod. Sphere B is nonconducting with charge $+Q$, and has mass M. Sphere B rests on an insulating platform of negligible mass that is attached to a vertical ideal spring with spring constant k_s. Sphere B and the spring are initially at rest.

   Sphere A is then brought near Sphere B without touching. When the centers of the spheres are separated by a vertical distance H, the spring has been compressed a distance y, as shown in the figure. The students measure y for different values of H.

GO ON TO THE NEXT PAGE.

© 2023 College Board.
Visit College Board on the web: collegeboard.org.

Continue your response to **QUESTION 1** on this page.

(a) On the following dot that represents Sphere B in the figure on the previous page, draw and label the forces (not components) that are exerted on Sphere B. Each force must be represented by a distinct arrow starting on, and pointing away from, the dot.

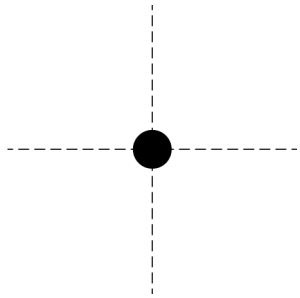

(b) Derive the relationship between y and H to show that $y = \frac{1}{4\pi\varepsilon_0}\frac{Qq}{k_s H^2} + \frac{Mg}{k_s}$.

GO ON TO THE NEXT PAGE.

© 2023 College Board.
Visit College Board on the web: collegeboard.org.

Continue your response to **QUESTION 1** on this page.

(c) The students plot collected data of y as a function of $\frac{1}{H^2}$, as shown in the graph.

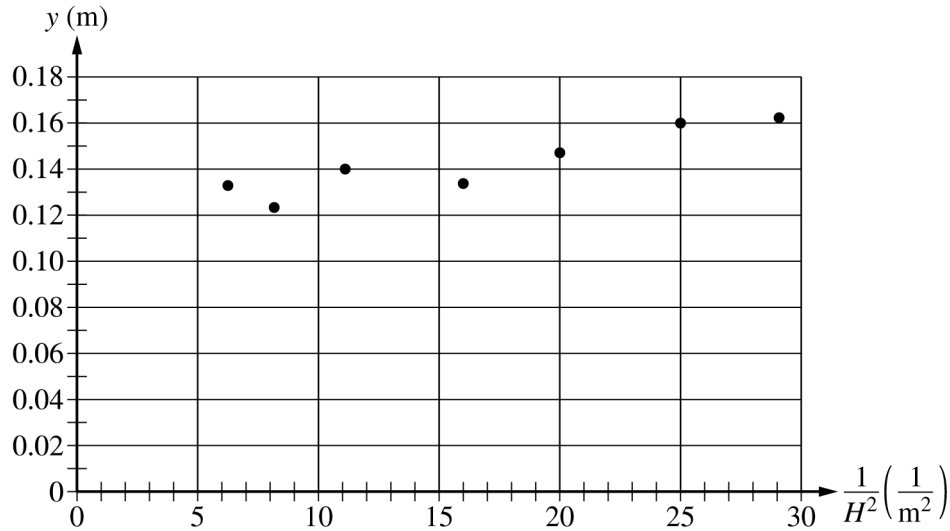

i. Draw the best-fit line for the data.

ii. Using the best-fit line, calculate an experimental value for the vacuum permittivity ε_0 when $Q = q = 2.00 \times 10^{-6}$ C and $k_s = 25$ N/m.

iii. Using the best-fit line, calculate an experimental value for the mass of Sphere B.

GO ON TO THE NEXT PAGE.

© 2023 College Board.
Visit College Board on the web: collegeboard.org.

Continue your response to **QUESTION 1** on this page.

(d) The students modify the experiment by replacing nonconducting Sphere B with conducting Sphere C that has the same charge $+Q$ and mass M. Sphere A is brought near Sphere C without touching, compressing the spring. Sphere C comes to rest.

i. In the original experiment, when the centers of spheres A and B are a vertical distance H_1 apart, the spring is compressed a distance y_1. In the modified experiment, when the centers of spheres A and C are a vertical distance H_1 apart, the spring is compressed a distance y_2.

Is y_2 greater than, less than, or equal to y_1 ?

____ $y_2 > y_1$ ____ $y_2 < y_1$ ____ $y_2 = y_1$

Justify your answer.

ii. Sphere C is then grounded with a wire. On the following figure, draw an arrow indicating the direction that the platform will move immediately after being grounded. If the platform remains stationary, write "does not move."

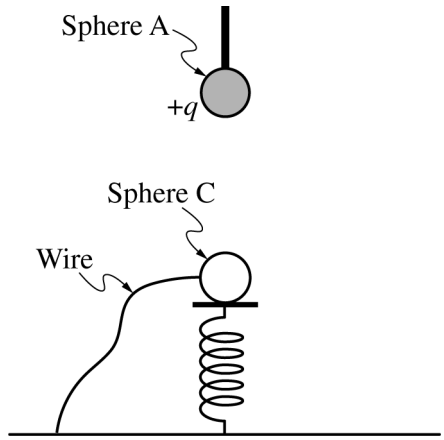

GO ON TO THE NEXT PAGE.

© 2023 College Board.
Visit College Board on the web: collegeboard.org.

Begin your response to **QUESTION 2** on this page.

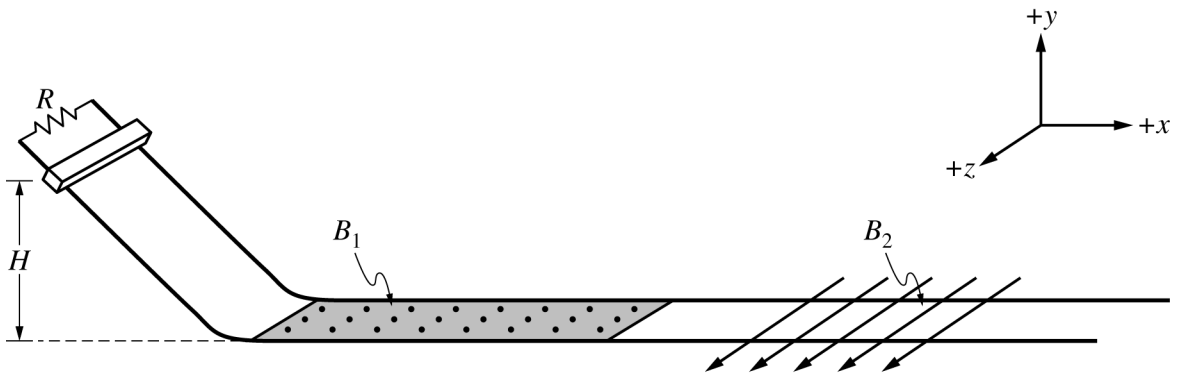

Perspective View (at time $t = 0$)

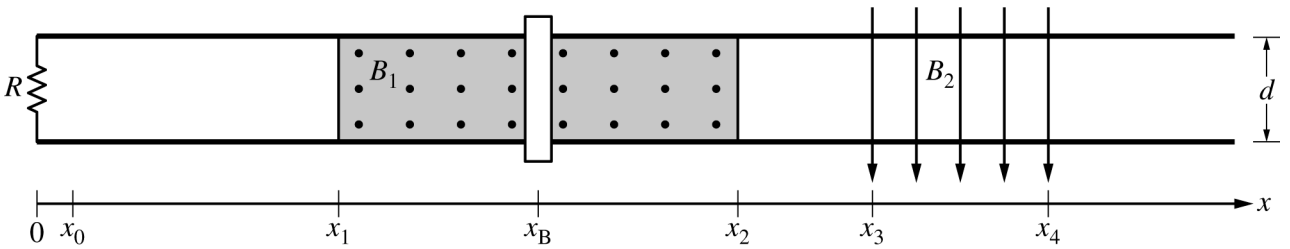

Top View (at time t_B)

2. Two parallel conducting rails are separated by distance $d = 0.30\ \text{m}$. A resistor of resistance $R = 0.20\ \Omega$ connects the rails. A conducting bar is placed on a sloped section of the rails at height H above the horizontal section of the rails. Frictional forces and the resistances of the bar and rails are negligible.

- At time $t = 0$, the bar is released from rest from position x_0 and slides down the sloped section of the rails, as shown in the Perspective View.
- At time t_1, the bar reaches position x_1 and smoothly transitions to the horizontal section of the rails and enters a uniform magnetic field of magnitude $B_1 = 0.40\ \text{T}$ that is directed in the $+y$-direction.
- At time t_2, the bar reaches position x_2 and enters a region with no magnetic field.
- At time t_3, the bar reaches position x_3 and enters a uniform magnetic field of magnitude $B_2 = 0.60\ \text{T}$ that is directed in the $+z$-direction.
- At time t_4, the bar reaches position x_4 and enters a region with no magnetic field.

The bar is at position x_B (shown in Top View) at time t_B such that $t_1 < t_B < t_2$.

GO ON TO THE NEXT PAGE.

© 2023 College Board.
Visit College Board on the web: collegeboard.org.

Continue your response to **QUESTION 2** on this page.

(a) On the following diagram of the bar, as observed from the Top View, draw an arrow indicating the direction of the net force F_{net} exerted on the bar at time t_B. If the net force is zero, write $F_{net} = 0$.

(b) At time t_B, the speed of the bar is $v = 2.5$ m/s.

i. Calculate the magnitude of the current in the bar at time t_B.

ii. Calculate the magnitude of the net force F_{net} exerted on the bar at time t_B.

(c) On the following axes, sketch a graph of the speed v of the bar as a function of time t between $t = 0$ and t_4.

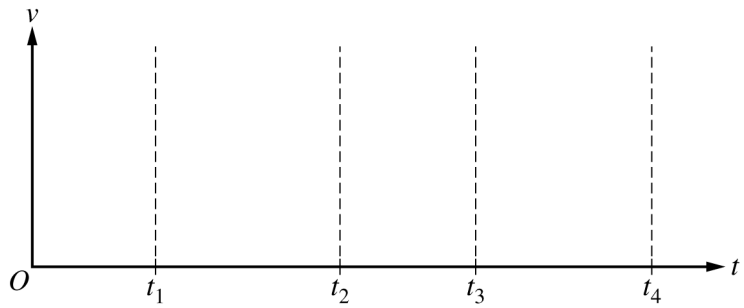

GO ON TO THE NEXT PAGE.

© 2023 College Board.
Visit College Board on the web: collegeboard.org.

Continue your response to **QUESTION 2** on this page.

(d) The original scenario is repeated but with a new bar that has the same mass but with a nonnegligible resistance $R = 0.20\ \Omega$. The new bar is released from rest and smoothly transitions to the horizontal section of the rails and enters the first uniform magnetic field.

i. Determine the total resistance of the closed circuit.

ii. In the original scenario, the magnitude of the acceleration of the bar immediately after the bar enters the first uniform magnetic field is a_{original}. In the new scenario, the magnitude of the acceleration of the bar immediately after the bar enters the first uniform magnetic field is a_{new}. Is a_{new} greater than, less than, or equal to a_{original} ? Justify your answer.

(e) Describe a modification to H, B_1, or d that will result in a larger induced current in the new bar immediately after the bar enters the first uniform magnetic field. Justify your answer.

GO ON TO THE NEXT PAGE.

© 2023 College Board.
Visit College Board on the web: collegeboard.org.

Begin your response to **QUESTION 3** on this page.

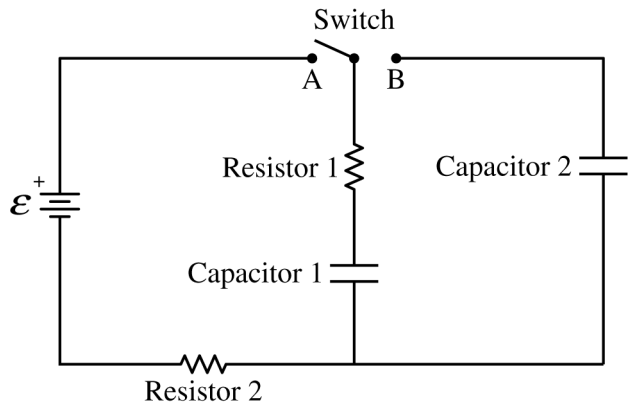

3. The circuit shown consists of an ideal battery of emf $\mathcal{E}$, resistors 1 and 2 each with resistance R, capacitors 1 and 2 each with capacitance C, and a switch. The switch is initially open and both capacitors are uncharged.

At time $t = 0$, the switch is closed to Position A.

(a) Write, but do NOT solve, a differential equation that can be used to determine the charge Q on the positive plate of Capacitor 1 as a function of time t after the switch is closed to Position A. Express your answer in terms of $\mathcal{E}$, R, C, Q, t, and fundamental constants, as appropriate.

GO ON TO THE NEXT PAGE.

© 2023 College Board.
Visit College Board on the web: collegeboard.org.

Continue your response to **QUESTION 3** on this page.

(b) On the axes shown, sketch graphs of the current I_R in Resistor 1 and the energy U_C stored in Capacitor 1 as functions of time t from time $t = 0$ until steady-state conditions are nearly reached.

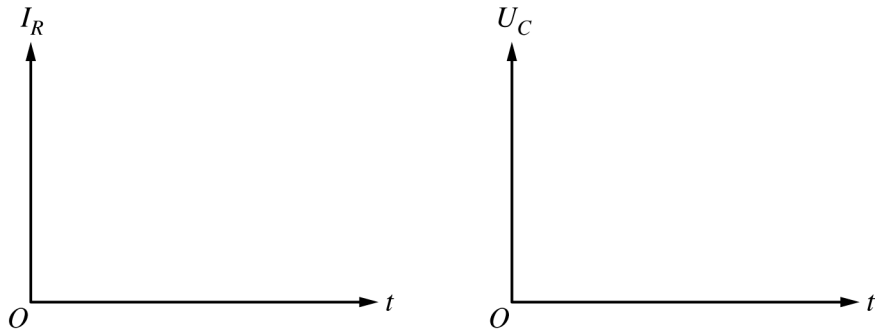

A long time after the switch is closed to Position A, the total charge on the positive plate of Capacitor 1 is Q_0 and Capacitor 2 is uncharged.

(c) At time t_1, the switch is closed to Position B.

i. Immediately after t_1, is the direction of the current in Resistor 1 directed up, directed down, or is there no current? Briefly justify your answer.

ii. Determine an expression for the total charge on the positive plate of Capacitor 2 a long time after t_1. Express your answer in terms of Q_0 and fundamental constants, as appropriate.

GO ON TO THE NEXT PAGE.

© 2023 College Board.
Visit College Board on the web: collegeboard.org.

Continue your response to **QUESTION 3** on this page.

iii. Derive an expression for the total energy dissipated by Resistor 1 immediately after time t_1 until new steady-state conditions have been reached. Express your answer in terms of C, Q_0, and fundamental constants, as appropriate.

With the switch still closed to Position B, a dielectric material with dielectric constant $\kappa = 2$ is inserted between the plates of Capacitor 2.

(d) Determine the charge on the positive plate of Capacitor 2 a long time after the dielectric has been inserted. Express your answer in terms of Q_0 and fundamental constants, as appropriate.

GO ON TO THE NEXT PAGE.

© 2023 College Board.
Visit College Board on the web: collegeboard.org.

Continue your response to **QUESTION 3** on this page.

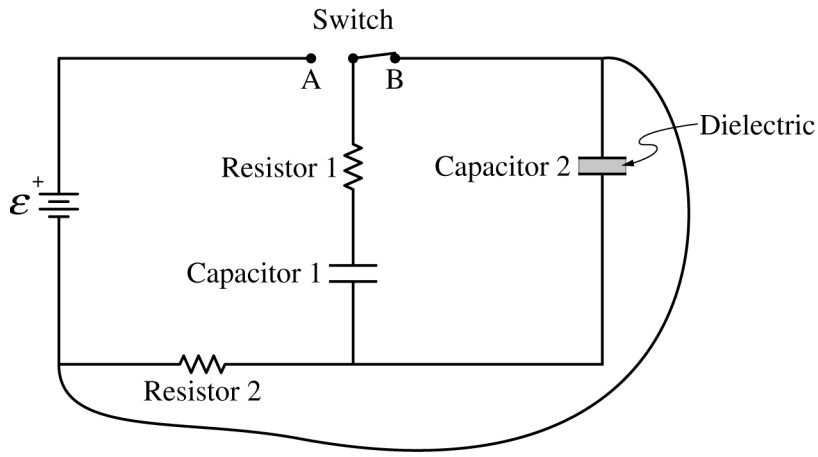

With the switch still closed to Position B, a wire of negligible resistance is connected between two corners of the circuit, as shown.

(e) Express your answers to part (e)(i) and part (e)(ii) in terms of R, C, Q_0, and fundamental constants, as appropriate.

i. Derive an expression for the current in Resistor 2 immediately after the wire is connected to the circuit.

ii. Determine the current in Resistor 2 a long time after the wire is connected to the circuit.

GO ON TO THE NEXT PAGE.

© 2023 College Board.
Visit College Board on the web: collegeboard.org.

STOP

END OF EXAM

© 2023 College Board.
Visit College Board on the web: collegeboard.org.