MCU

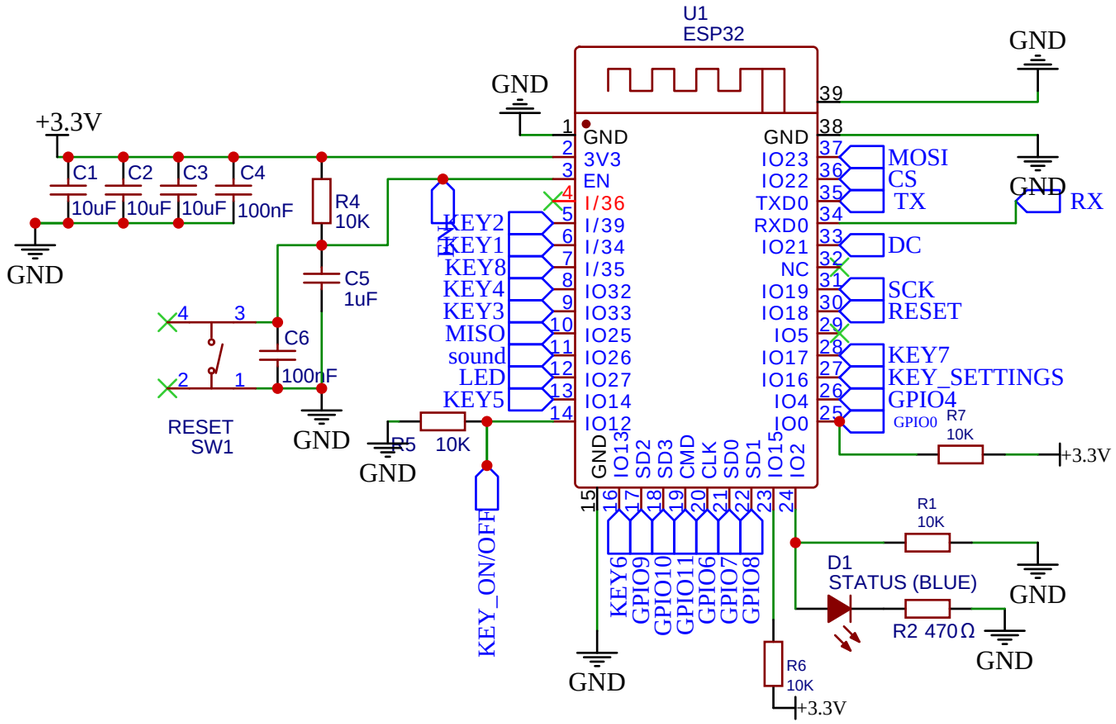

Controls

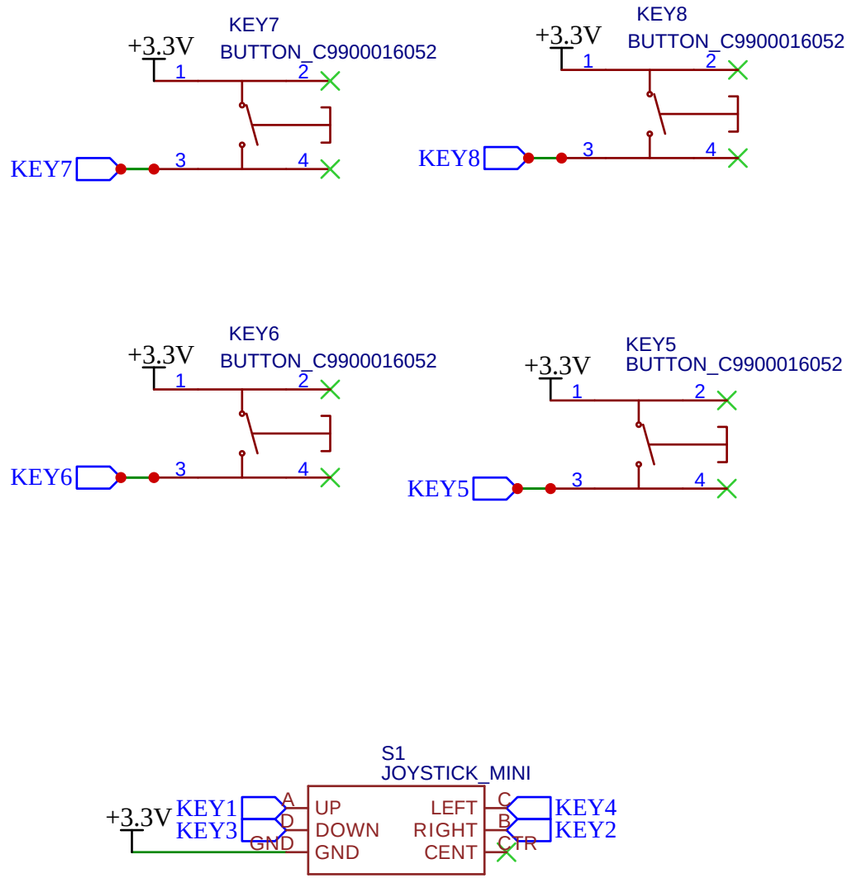

Externals

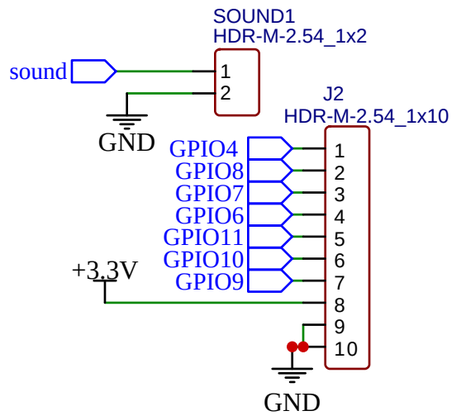

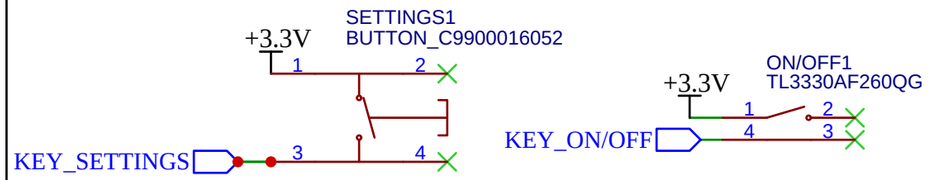

POWER LED

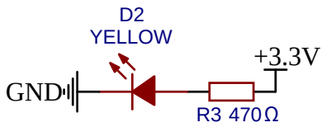

3.3V VOLTAGE REGULATOR

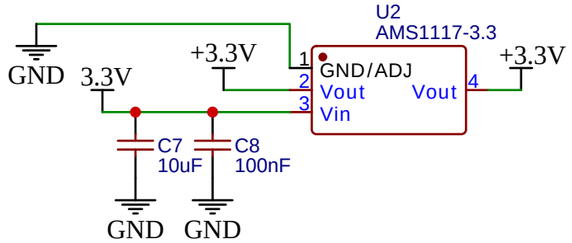

SONOFF SERIAL HEADER

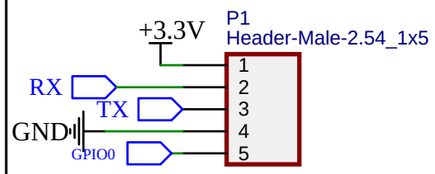

TITLE: Akira Basic	REV: 1.3
Company: Pen Design	Sheet: 1/2
Date: 2023-07-19 Drawn By: Artur Sirbu	

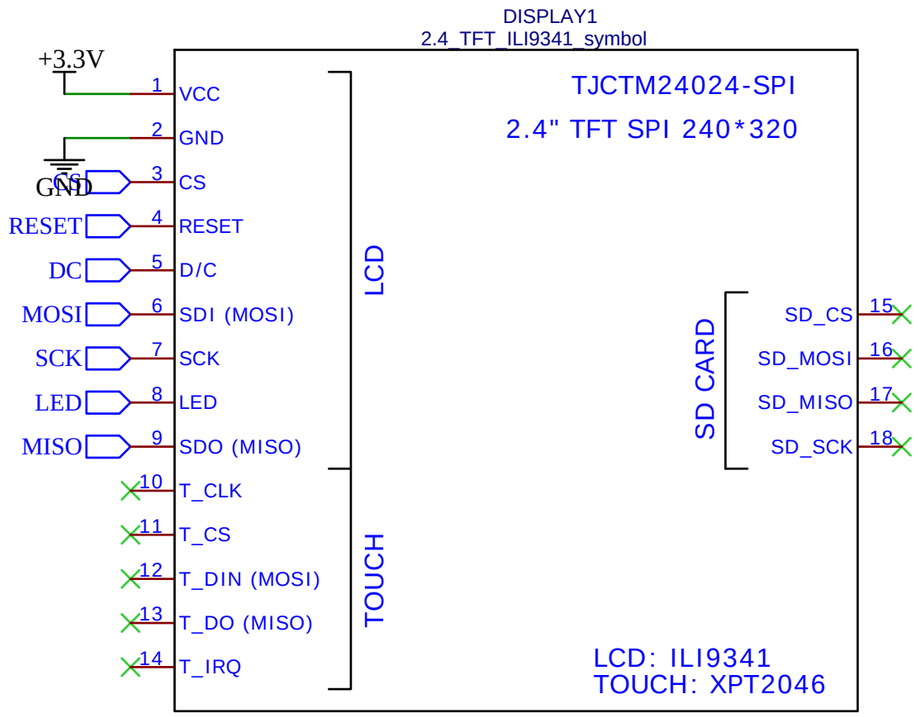

TITLE: Akira Basic		REV: 1.3
	Company: Pen Design	Sheet: 2/2
	Date: 2023-07-19 Drawn By: Artur Sirbu	