MCU

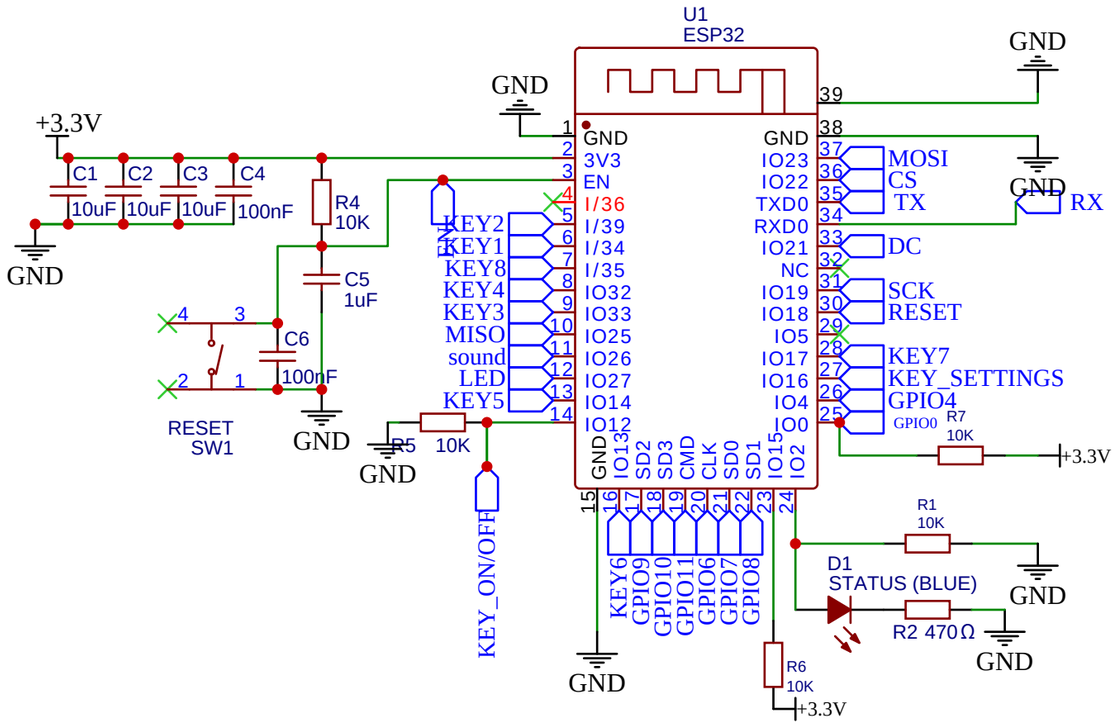

Controls

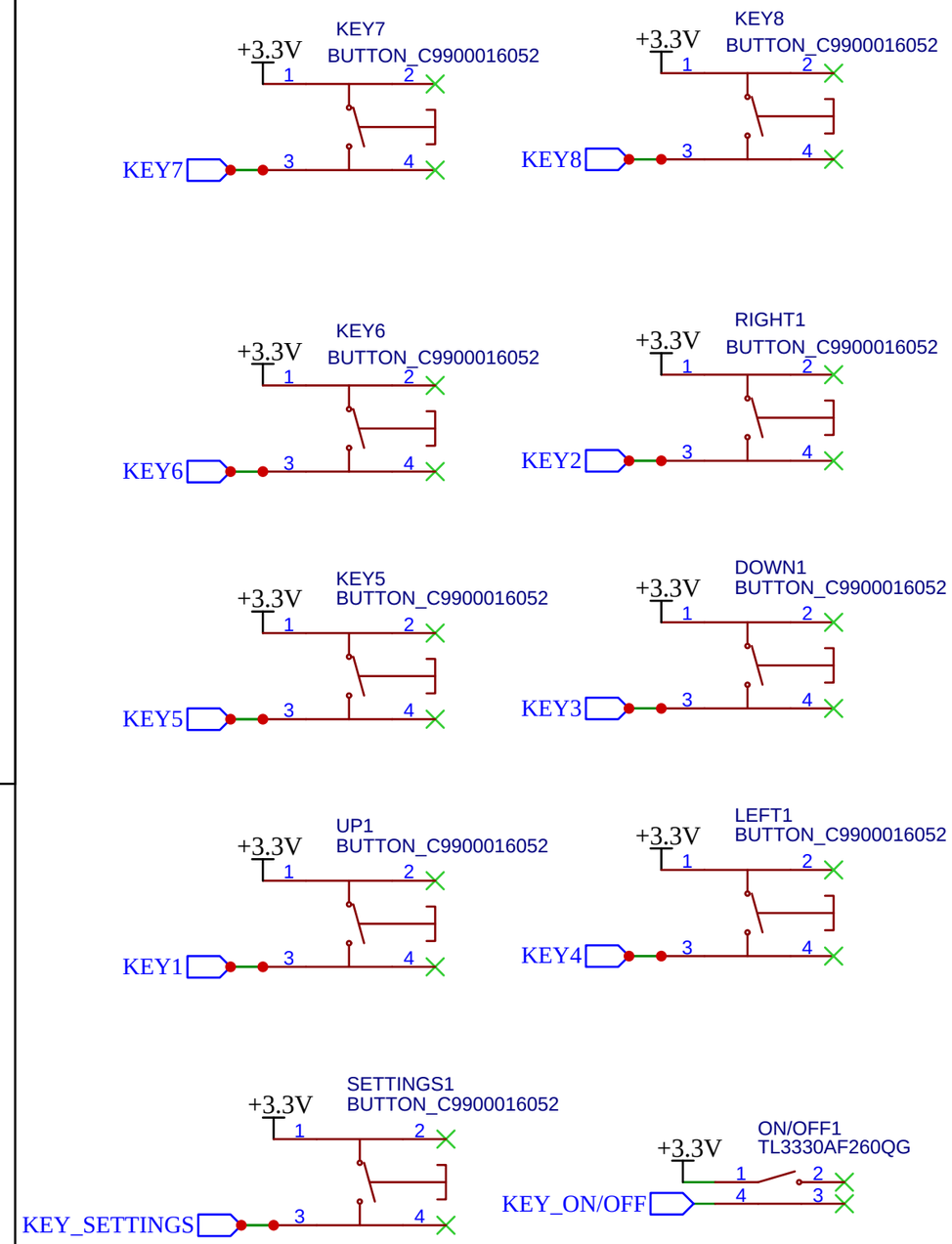

Externals

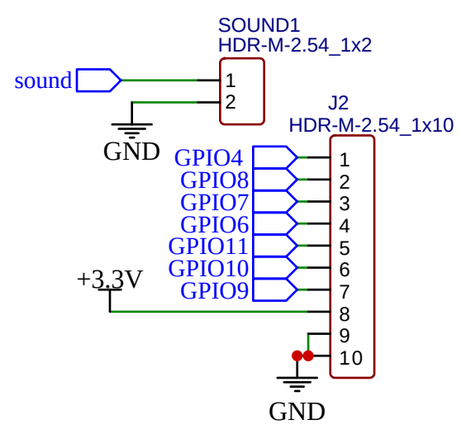

POWER LED

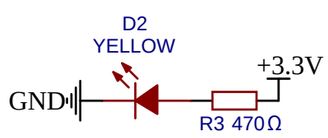

3.3V VOLTAGE REGULATOR

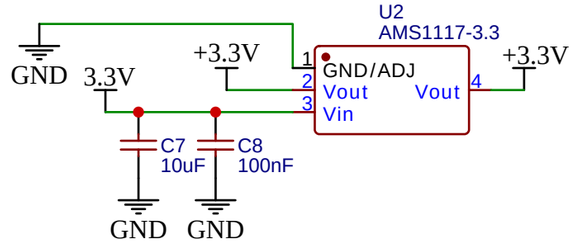

SONOFF SERIAL HEADER

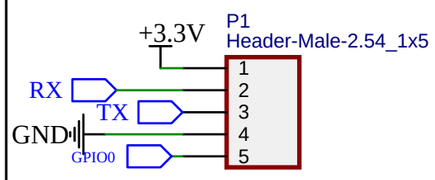

TITLE: Akira Basic

REV: 1.2

Company: Pen Design

Sheet: 1/2

Date: 2023-07-19

Drawn By: Artur Sirbu

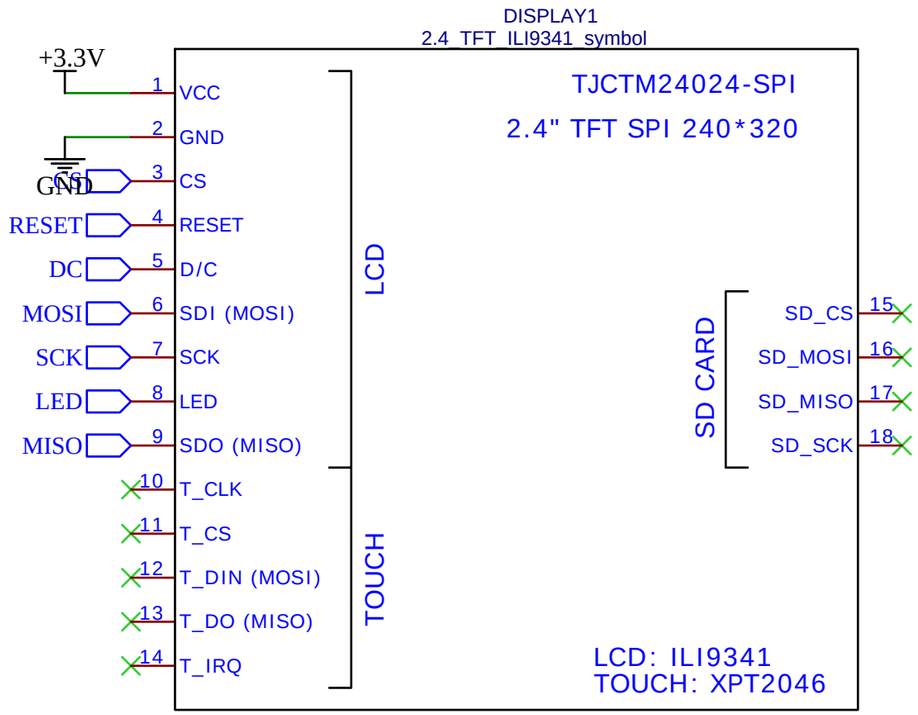

TITLE: Akira Basic	REV: 1.2
Company: Pen Design	Sheet: 2/2
Date: 2023-07-19 Drawn By: Artur Sirbu	