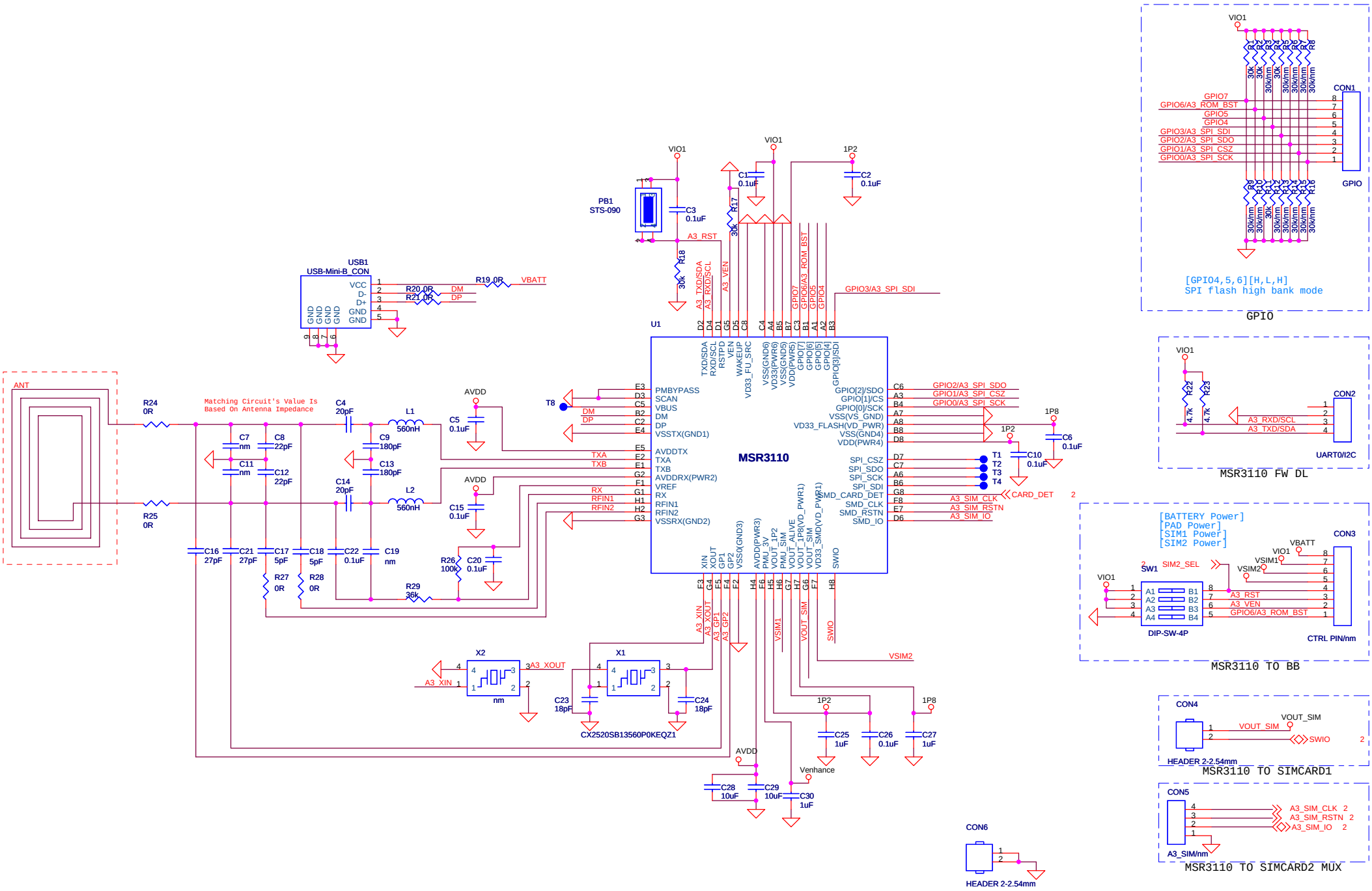
MSR3110
U1
ANT
Matching Circuit's Value Is Based On Antenna Impedance
USB1
USB-Mini-B_CON
PB1
STS-090
T8
X1
X2
CX2520SB13560P0KEQZ1
CON1
GPIO
[GPIO4,5,6][H,L,H]
SPI flash high bank mode
CON2
UART0/I2C
MSR3110 FW DL
CON3
CTRL PIN/nm
DIP-SW-4P
MSR3110 TO BB
CON4
HEADER 2-2.54mm
MSR3110 TO SIMCARD1
CON5
A3_SIM/nm
MSR3110 TO SIMCARD2 MUX
CON6
HEADER 2-2.54mm
MStar Semiconductor, Inc.
4F-1, No. 26, Tai-Yuan St., ChuPei
HsinchuHsien, Taiwan302, R.O.C.
Design Title MSR3110 DEMOBOARD
Project Name : BIG2
Document Number <Doc>
Page Name : MSR3110
Size A3
Design Date : Thursday, September 15, 2011
Author : MST
Rev 0.1A
Page Date : Wednesday, July 27, 2011
Sheet : 1 of 3

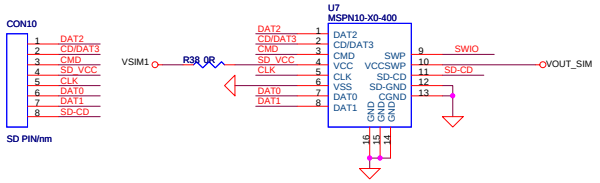

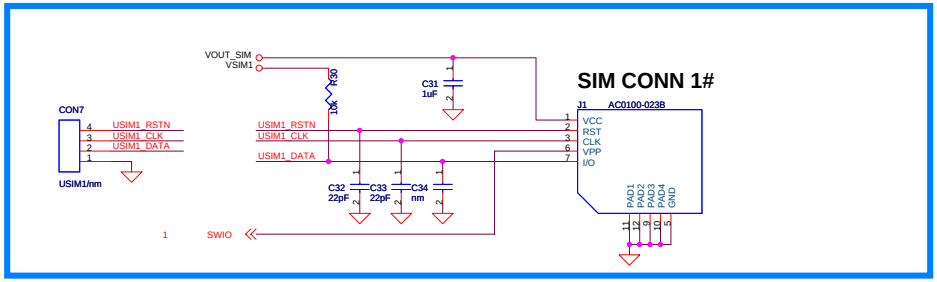

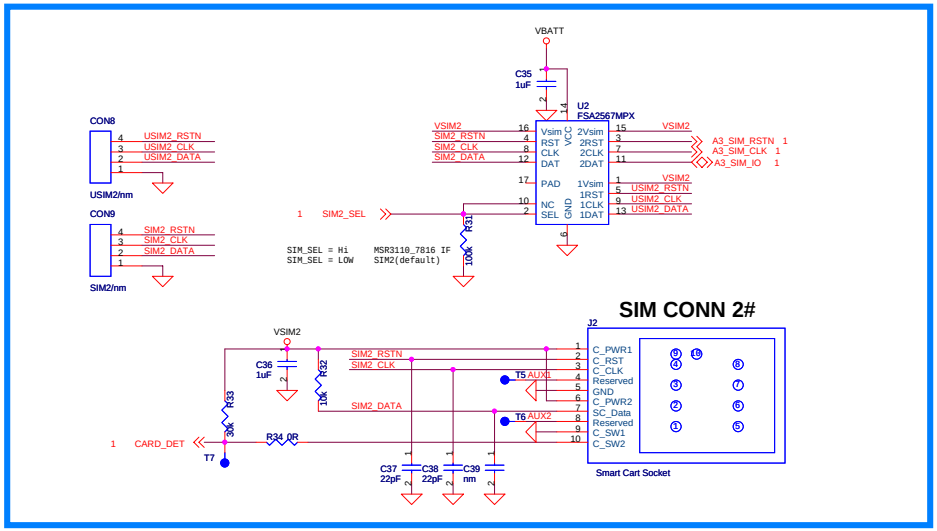

MStar Semiconductor, Inc.
4F-1, No. 26, Tai-Yuan St., ChuPei
Hsinchu Hsien, Taiwan302, R.O.C.

Design Title	MSR3110 DEMOBOARD		
Project Name :	SMALL-BLUE		
Document Number <Doc>	Page Name : SIM Card MUX		Size C
Design Date : Thursday, September 15, 2011	Author : MST		Rev
Page Date : Thursday, September 15, 2011	Sheet : 2 of 3		0.1A

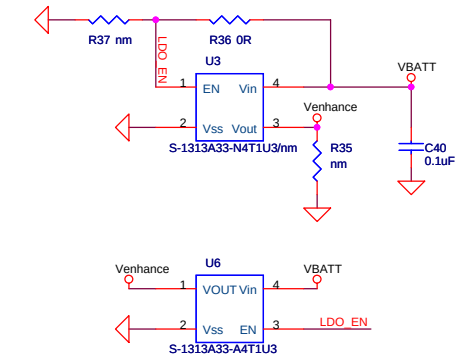

MStar Semiconductor, Inc.
4F-1, No. 26, Tai-Yuan St., ChuPei
HsinchuHsien, Taiwan302, R.O.C.

Design Title	MSR3110 DEMOBOARD		
Project Name :	SMALL-BLUE		
Document Number <Doc>	Page Name : POWER		Size A3
Design Date : Thursday, September 15, 2011		Author : MST	Rev 0.1A
Page Date : Thursday, July 21, 2011		Sheet : 3 of 3	