Power

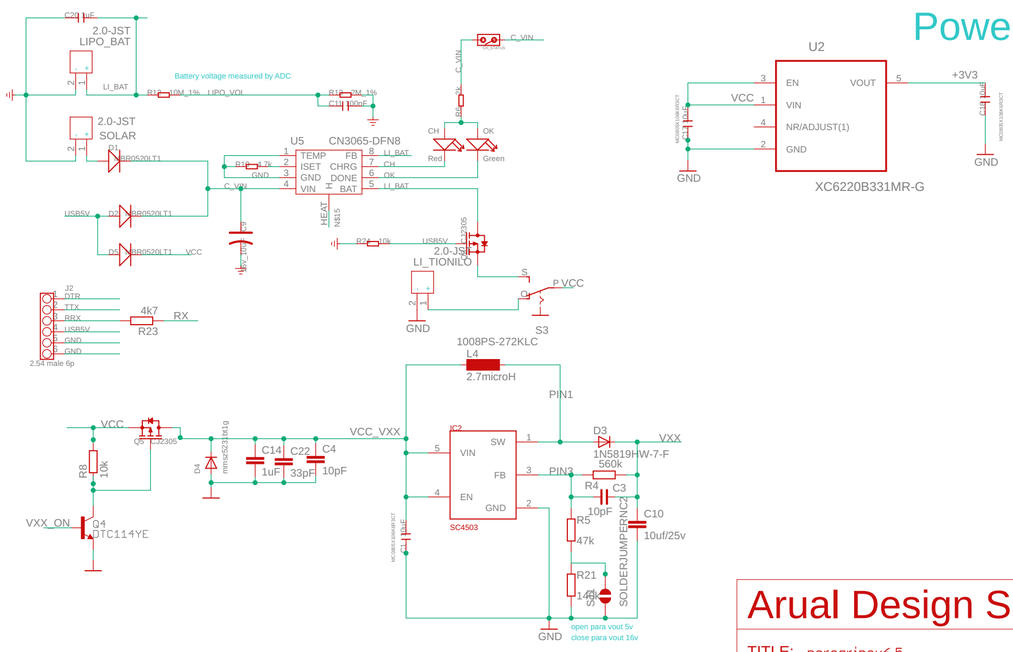

Arual Design SL		
TITLE: peregrinov6.5		
Design:	Check:	
Date: not saved!	Vision: v3	Sheet: 1/1

Bee

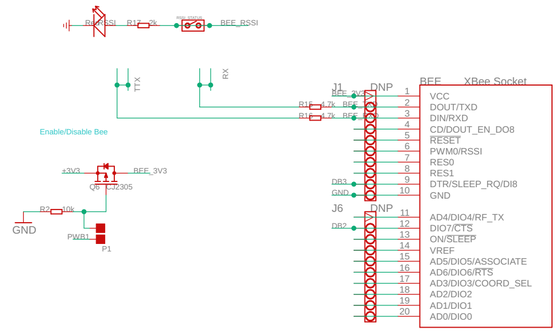

Memory

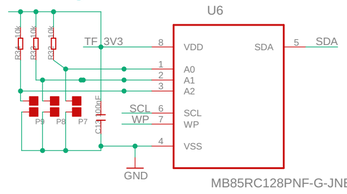

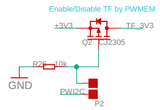

RS-485

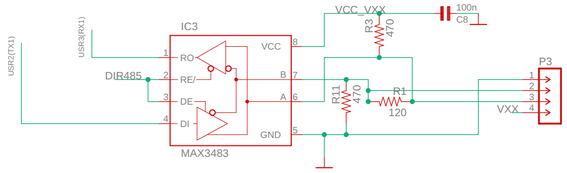

Arual Design SL		
TITLE: peregrinov6.5		
Design:	Check:	
Date: not saved!	Vision:	Sheet: 1/1

PROCESS

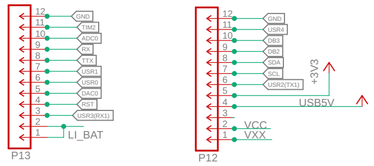

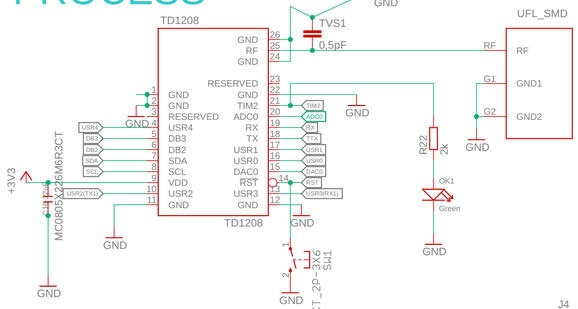

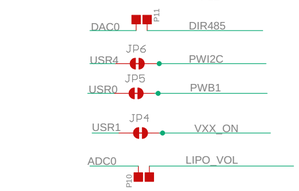

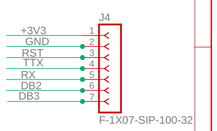

SENSORS

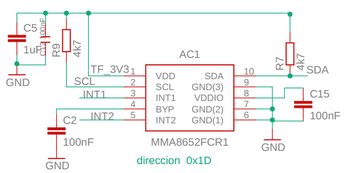

Arual Design SL		
TITLE: peregrinov6.5		
Design:	Check:	
Date: not saved!	Vision:	Sheet: 1/1

TILT AND VIBRATION SENSORS

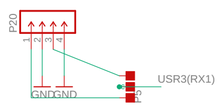

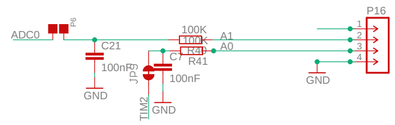

EXTERNAL SENSORS

Arual Design SL		
TITLE: peregrinov6.5		
Design:	Check:	
Date: not saved!	Vision:	Sheet: 1/1