WIRELESS EEG MACHINE:

IMPLEMENTING A WIFI-BASED ELECTROENCEPHALOGRAM (EEG) MONITORING SYSTEM USING ESP32 AND A SINGLE-CHANNEL EEG ACQUISITION CIRCUIT

FINAL YEAR PROJECT REPORT SUBMITTED IN PARTIAL FULFILLMENT FOR THE AWARD OF THE DEGREE OF

Bachelor of Technology (B. Tech)

In

Electronics and Communication Engineering

BY

ARUN SURESH

21JE0169

UNDER THE GUIDANCE OF

Prof. Sanjeev Kumar Raghuwanshi

Professor

Department of Electronics Engineering

DEPARTMENT OF ELECTRONICS ENGINEERING

INDIAN INSTITUTE OF TECHNOLOGY (INDIAN SCHOOL OF MINES), DHANBAD

CERTIFICATE FROM THE GUIDE

This is to certify that Arun Suresh (21JE0169) has satisfactorily completed the project on the topic "**WIRELESS EEG MACHINE:** IMPLEMENTING A WIFI-BASED ELECTROENCEPHALOGRAM (EEG) MONITORING SYSTEM USING ESP32 AND A SINGLE-CHANNEL EEG ACQUISITION CIRCUIT" under the guidance of Prof. Sanjeev Kumar Raghuwanshi. This Project report is submitted to the Department of Electronics Engineering of the Indian Institute of Technology (ISM) Dhanbad in partial fulfilment of the requirement for the degree of Bachelor of Technology in Electronics and Communication Engineering during the academic year 2024-2025.

Prof. Sanjeev Kumar Raghuwanshi
Professor
Department of Electronics Engineering
IIT (ISM) Dhanbad

Prof. Ravi Kumar Gangwar
Head of Department
Department of Electronics Engineering
IIT (ISM) Dhanbad

ACKNOWLEDGEMENT

I would like to express my sincere gratitude and appreciation to all those who made it possible for me to complete this project and report.

First and foremost, I extend my heartfelt thanks to my supervisor, Prof. Sanjeev Kumar Raghuwanshi, for his invaluable guidance, stimulating suggestions, and constant encouragement throughout the development of this project and the preparation of this report. His mentorship has been instrumental at every stage of the work.

I am also deeply thankful to Mr. Neelesh Kumar for his time and effort in reviewing my work and providing constructive feedback that helped me improve and refine many aspects of the project.

I gratefully acknowledge the support provided by the staff of the Electronics Laboratory, whose assistance and permission to use lab equipment and tools were crucial for the hardware development phase.

My sincere thanks also go to all the lecturers and supervisors who contributed their time and expertise, offering valuable insights that kept my progress on track and motivated me to maintain high standards.

Finally, I would like to express my gratitude to my classmates and friends for their unwavering support, teamwork, and encouragement throughout the project. Their help in solving challenges and sharing knowledge made this journey both productive and enjoyable.

Arun Suresh

21JE0169

Table of Contents

CERTIFICATE FROM THE GUIDE 2

ACKNOWLEDGEMENT 3

Abstract 7

Introduction 8

- Background on EEG 8
- Importance of Wireless EEG Systems 8
- Objective of the Project 9

System Overview 11

- Block Diagram 12

Hardware Components 13

- EEG Electrodes 13
  - Types of Electrodes 14
- EEG Conditioning Circuit 14
  - Protection Circuit 14
  - Instrumentation Amplifier 16
  - High Pass Filter 18
  - Low Pass Filter 19
  - Notch Filter 21
  - Driver Leg Circuit 22
- Analog to Digital Convertor and Microcontroller 24
  - Analog-to-Digital Convertor (ADC) 24

Software Implementation 27

- Firmware Development using Arduino IDE 27
  - Code for ESP32 28
- Web Interface using HTML and JavaScript 29
  - HTML + JavaScript code for Website 30

Future Work 36

Conclusion 39

Bibliography 40

LIST OF FIGURES

Figure 1: Basic workflow for Real-Time Wireless EEG system 10
Figure 2 Block diagram of a wireless EEG Machine 12
Figure 3 Depiction of Electrode placement in the standard 10-20 System 13
Figure 4 Basic circuit model of various electrodes 14
Figure 5 Basic Protection circuit 15
Figure 6 Pin diagram of AD620 16
Figure 7 Internal circuit of AD620 17
Figure 8 Instrumentation Amplifier Stage 17
Figure 9 High Pass Filter stage and its Bode plot 19
Figure 10 Low Pass Filter stage and its Bode plot 21
Figure 11 50 Hz Notch Filter with its Bode plot 22
Figure 12 Circuit diagram of EEG conditioning circuit 23
Figure 13 ESP32-WROOM-32 25
Figure 14 Connection between EEG circuit andESP32 25
Figure 15 IP Address as viewed from Serial Monitor 29
Figure 16 Breadboard implementation of the circuit 35
Figure 17 Brain waves separated into different bands by the website 35

Abstract

This project introduces the design and development of a single-channel wireless Electroencephalogram (EEG) monitoring system based on the ESP32 microcontroller. The system can collect raw EEG signals via a home-made analog front-end circuit, which comprises amplification, high-pass, low-pass, and notch filtering stages to condition the low-amplitude brain signals. The conditioned signals are digitized by the analog-to-digital converter (ADC) of the ESP32, i.e., GPIO34, and wirelessly transmitted over Wi-Fi via WebSocket protocol.

A web-based interface, created with HTML and JavaScript, captures the streamed EEG data in real time and analyses it to obtain standard brainwave frequency bands—Delta, Theta, Alpha, Beta, and Gamma. This gives users a real-time visualization of their brainwave activity, and the system can be employed for applications like neurofeedback, monitoring of mental state, and educational demonstrations.

The project demonstrates the possibility of web and low-cost, open-source hardware in providing portable and accessible neurotechnology solutions. It paves the way for further advancements in fields such as real-time brain state classification, multi-channel acquisition, mobile integration, and secure cloud-based EEG monitoring.

Introduction

Background on EEG

Electroencephalography (EEG) is a widely used scientific technique for monitoring and recording the brain's spontaneous electrical activity, crucial in various applications such as diagnosing different medical conditions, neurofeedback, and cognitive research. EEG systems used for diagnosis consist of 16-25 non-invasive electrodes and are locally connected to produce an Electrogram (recording of changes in electric potential done by EEG). Such tethered EEG cannot be used to measure the brain activity during active physical activities. By using wireless technology, data acquired from the electrodes can be transmitted and viewed in real-time on smartphones or computers. The objective of this survey is to explore the current state of research wireless EEG systems, focusing on signal acquisition, wireless communication, and integration with mobile devices. Based on the frequency, EEG waves are classified into five types: Alpha (8-13 Hz), Beta (13-30 Hz), Delta (0.5-4 Hz), Theta (4-8 Hz) and Gamma (30-74) Hz.

Traditional wired EEG machines require the subject to remain immobile for extended periods of time, which while is reliable for monitoring the health of the patient, it is not practical for various research related to motor control, sports science, naturalistic behavioural research and various other interconnected fields of Neuroscience. Many studies and experiment don’t require the data from all the electrodes. The development of non-restrictive ways of acquiring brain waves is thus required. Wireless EEG systems are being steadily developed as a solution to this problem. Wireless systems also have other advantages such as simplified setup and application, improved long-term monitoring, convenience and flexibility, power efficiency, cost efficiency, etc.

Importance of Wireless EEG Systems

Wireless EEG systems provide with some major advantages over the Traditional EEG systems. Traditional EEG systems involve a complex array of cables connecting electrodes with bulky equipment. While necessary in comprehensive analysis, these setups severely limit patient mobility, comfort and limit the conditions under which the EEG data must be acquired.

The development of wireless EEG systems, therefore, is essential in overcoming these challenges by enabling more user-friendly brain monitoring. With wireless technology, Brain waves can now be collected during different scenarios requiring more bodily movements and other cognitive research in real-life settings.

So, we can conclude that wireless EEG systems enhance the usability, comfort, and flexibility, for the purpose of diagnostics, research, and personal neurotechnology. They are essential in removing the limitations of the Traditional EEG systems and monitoring the patient remotely without hindering their day-to-day life.

Objective of the Project

The main objective of this project is to devise and implement a single-channel wireless EEG system for acquiring brain waves and sending the same in real-time to an end-user device like a smartphone or laptop over Wi-Fi. The system proposes to offer low-cost, space-efficient, portable brainwave monitoring outside the lab.

The main goals include:

1. To make a low-cost, energy-efficient EEG signal acquisition circuit that amplifies and filters the signals from electrodes.
2. To digitize the acquired analog data, establishing a Wi-Fi based communication link with ESP32 and transmitting data to a web server in real-time via WebSockets.
3. To process the signals and separating them into various bands like Alpha, Beta, Delta, etc. on the client side.
4. Displaying the processed waveforms on a laptop or mobile phone.

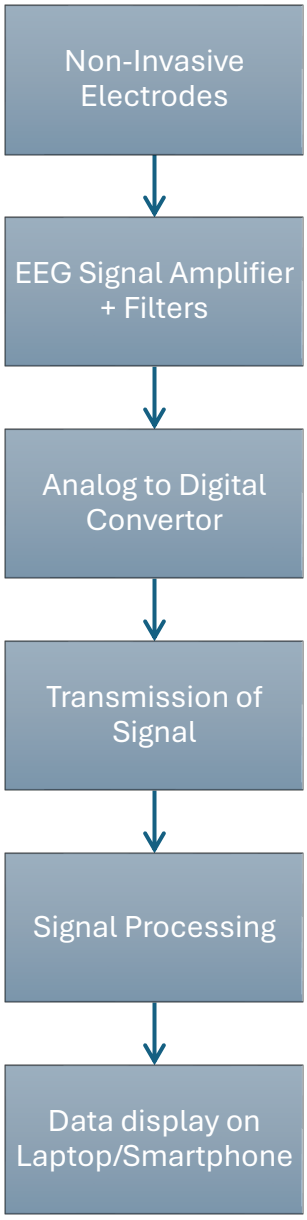

Figure 1: Basic workflow for Real-Time Wireless EEG system

System Overview

The wireless EEG system designed in the project is intended to capture, digitize transmit and display the brainwave signals from a single channel in real-time. It combines the analog signal conditioning, embedded processing, wireless communication, and web-based data visualization into a small and portable platform.

The system consists of four main functional blocks:

- EEG Signal Acquisition Circuit:
  The system starts with non-invasive electrodes that sit on the scalp to sense feeble bioelectric signals due to brain activity. The raw signals, being usually in microvolt, are extremely vulnerable to interference and noise. A hand-built analog front-end circuit amplifies and filters the signals to ensure that desirable brainwave frequencies (0.5–100 Hz) remain intact while they reject noise (like 50/60 Hz power line interference and DC drift).

- Signal Digitization with ESP32:
  The conditioned analog EEG signal is now input to the ESP32 microcontroller, which has onboard 12-bit ADC. The ESP32 samples the signal at an appropriate rate (≥250 Hz) to provide precise reconstruction of all bands of interest of the brainwaves. It also does basic formatting of data for transmission.

- Wireless Data Transmission with Wi-Fi:
  After digitization, the EEG data is streamed in real-time via Wi-Fi through the ESP32's networking features. Data is transmitted to a WebSocket server, which enables low-latency, continuous communication between the microcontroller and the user device (laptop or mobile) without the HTTP polling overhead.

- Real-Time Signal Processing and Visualization:
  At the client side (within a web browser), the input data is then processed to yield useful information from the signal. This involves separation of bands into Alpha, Beta, Theta, and other ranges through digital filtering or Fast Fourier Transform (FFT). The filtered signals are subsequently displayed in real-time on a graphical user interface where users can see their brainwave activity as interactive plots. The signals can also be downloaded locally and saved in CSV format.

This wireless and modular structure makes it possible for the EEG system to be portable, easy to use, and accessible for remote monitoring of brain activity. It also makes future upgrading, like additional channels, integration with mobile applications, or real-time feedback for BCI applications, possible.

Block Diagram

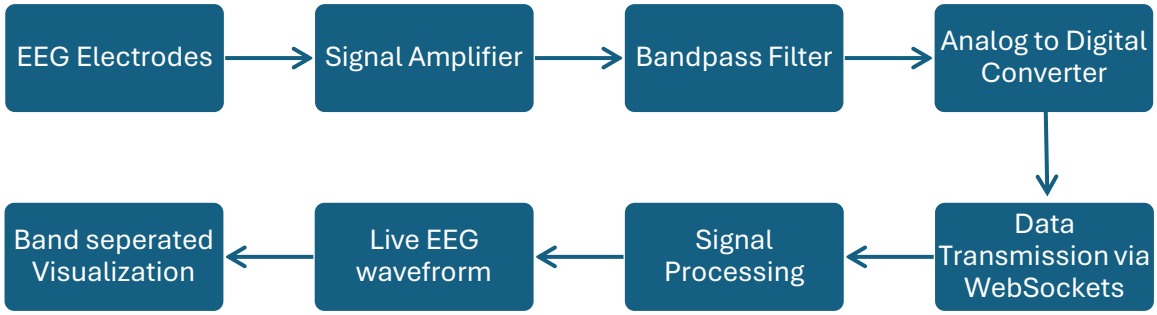

Figure 2 Block diagram of a wireless EEG Machine

Hardware Components

The hardware of the EEG systems focuses on the capture of EEG signal, processing of the signal (amplification and filtering), converting the analog data into digital data and transmission of the data in a wirelessly.

EEG Electrodes

EEG signals are acquired using electrodes that capture the electrical activity generated by neurons in the brain. The electrodes are applied to the scalp using the 10-20 system, which is a widely used method of electrode placement to allow for consistency of recordings across studies and applications. Three electrodes will be utilized in this project, one of which will be for driver leg circuit.

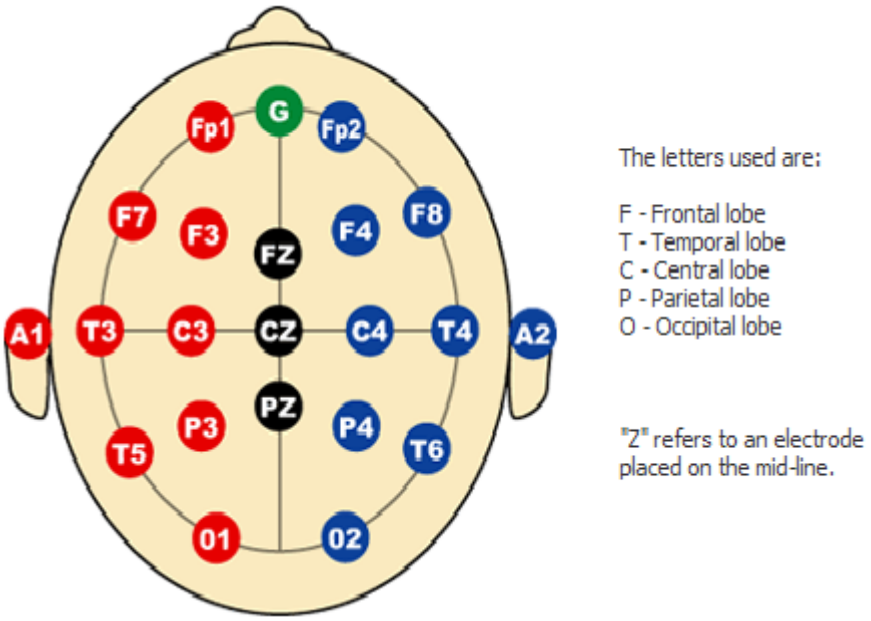

Figure 3 Depiction of Electrode placement in the standard 10-20 System

Types of Electrodes

- Wet Electrodes:

  This type of electrode requires a conductive gel or paste to be applied on it for reducing the impedance between the skin and electrode. It is mainly used in traditional EEG systems. Wet electrodes are not suitable for long-term monitoring.

- Dry Electrodes:

  These electrodes are made of materials like silver/silver chloride or conductive polymers. They do not require any conductive medium and are more suitable for wearable and wireless EEG systems. Dry electrodes are more convenient than wet electrodes, but they have higher impedance and are more sensitive to movement artifacts than wet electrodes.

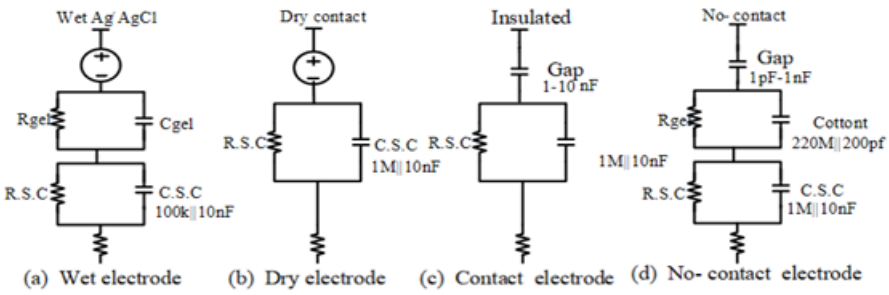

Figure 4 Basic circuit model of various electrodes

EEG Conditioning Circuit

The raw EEG signal is generally in the range of microvolts, so the signal is required to be amplified and filtered before it is converted to digital signal. The signal is first amplified using a precision amplifier, then it is filtered using a high pass filter, low pass filter and a notch filter and it is finally amplified so that it is in the range of analog to digital converter (ADC).

Protection Circuit

The EEG signal obtained from the electrodes are passed through a protection circuit. Protection circuit is a critical safety measure used to protect both the patient and the sensitive recording equipment. This circuit can protect the patient against electrical hazards like leakage currents.

It also shields the amplifiers and other circuit from voltage spikes. The basic protection circuit is made of BJTs, such as BC547 and BC557. Since the circuit in the project works on very low voltage and the ICs are more resistant to the voltage spikes, this circuit won't be used in the project. Nevertheless, this is an essential circuit for EEG systems.

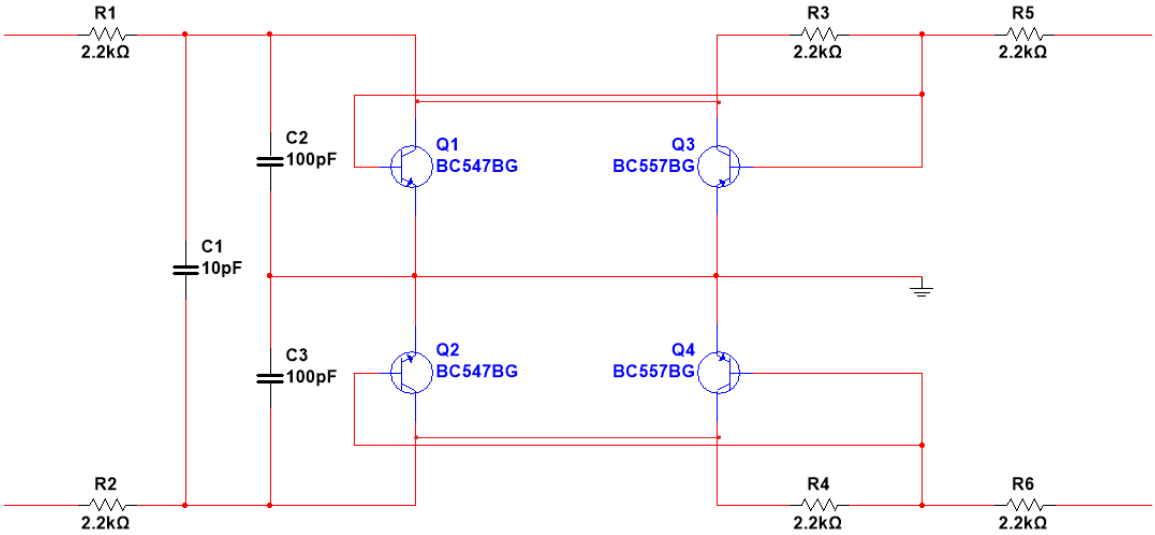

Figure 5 Basic Protection circuit

Instrumentation Amplifier

This is the first stage of amplification and signal processing. EEG signals generally exist in the range of 10-100 μV, making them vulnerable to noise and interference. Capturing these signals accurately requires an Instrumentation amplifier that can boost the signal without introducing distortion or picking up unwanted electrical noise. For this project, AD620 is the instrumentation amplifier used.

AD620 is a versatile and low-cost, high-accuracy instrumentation amplifier. It operates on low supply voltages and has a low power consumption, which is ideal for portable, battery-powered EEG systems. AD620 has high common-mode rejection ratio (CMRR), low noise, and precise gain control. It allows for gain adjustment using a single external resistor, making it easy to tune the amplification based on the needs of the circuit.

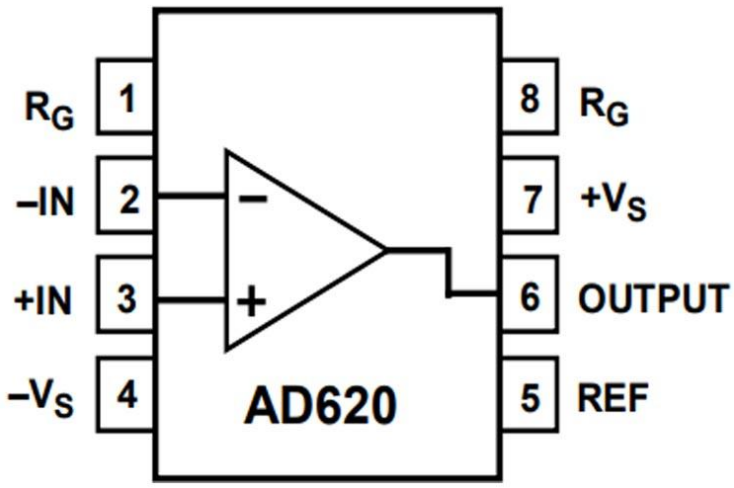

Figure 6 Pin diagram of AD620

From figure 6, the pins 1 and 8 are labelled R_G, and a resistor is connected between them for adjusting the gain. From the internal circuit of AD620, we can see that the formula for gain G of the amplifier is

$$G = \left(1 + \frac{2R_1}{R_g}\right)\frac{R_3}{R_2}$$

From the internal resistance values of the AD620, the final formula for gain comes out to be

$$G = 1 + \frac{49.4k\Omega}{R_G}$$

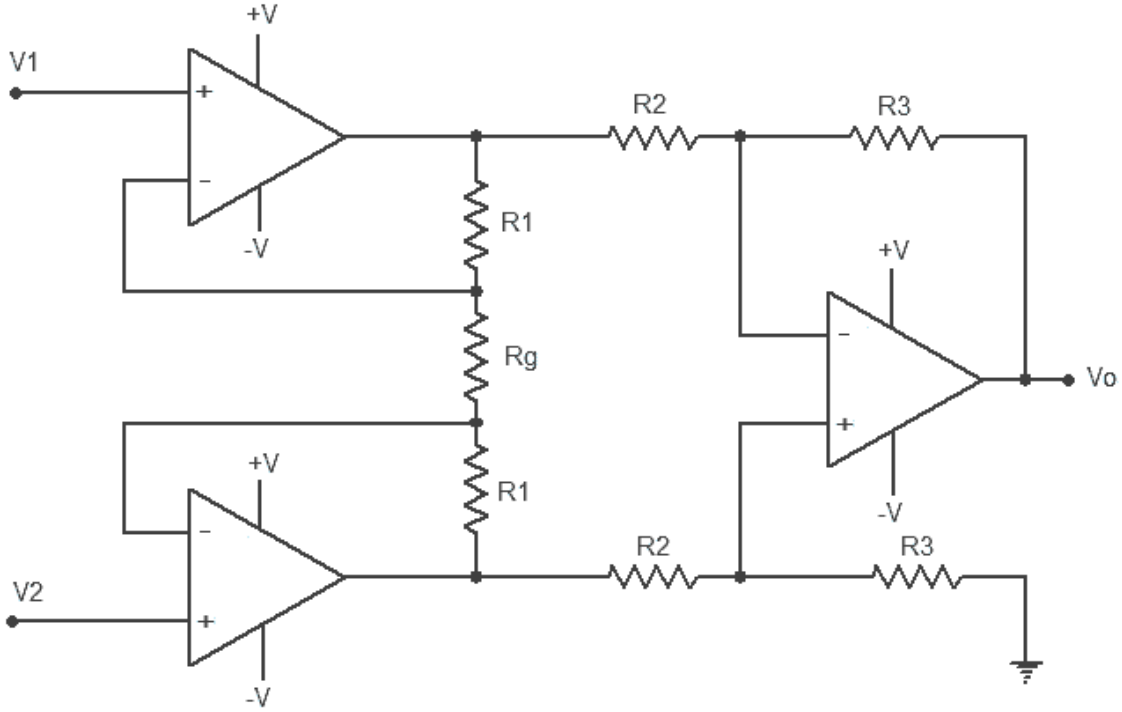

Figure 7 Internal circuit of AD620

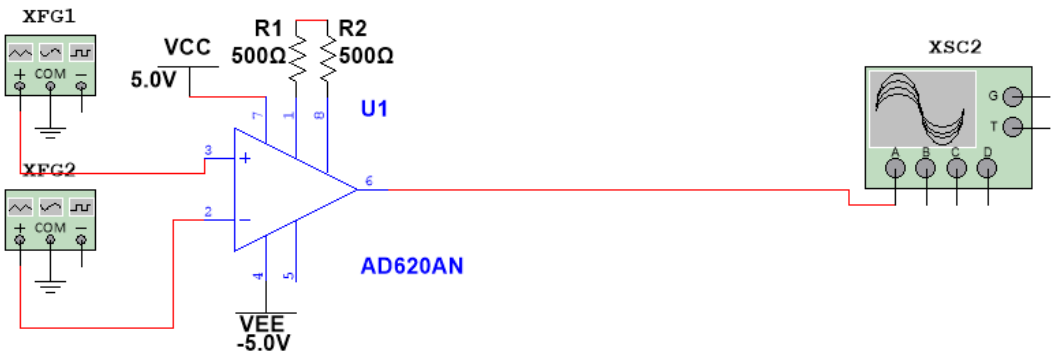

Figure 8 Instrumentation Amplifier Stage

It is to be noted that the Driver leg circuit will be attached in between R1 and R2 in figure 8.

High Pass Filter

The high-pass filter is an essential part of the EEG signal conditioning circuit, responsible for removing slow-varying or constant signals (DC offsets and baseline drift) that can obscure the low-amplitude brainwave activity of interest.

In EEG applications, high-pass cutoff frequency is set around 0.5 Hz. This ensures that the filter allows the physiologically relevant EEG frequency bands—such as Delta (0.5–4 Hz), Theta (4–8 Hz), Alpha (8–13 Hz), and Beta (13–30 Hz)—to pass through, while attenuating slow drifts caused by skin potentials, movement artifacts, or sensor instability.

The high-pass filter in this project is implemented using a first-order RC filter, which is simple, compact, and effective for low-frequency biomedical signals. It is typically placed immediately after the instrumentation amplifier (AD620), ensuring that the amplified EEG signal is cleaned before being sent to the analog-to-digital converter (ADC) on the ESP32.

By removing very low-frequency components and DC noise, the high-pass filter helps preserve the clarity and dynamic range of the EEG signal, ensuring more accurate digitization and interpretation in the subsequent processing stages.

In this project, the LM358 operational amplifier is used to implement the active high-pass filter stage of the EEG signal conditioning circuit. The LM358 is a popular, low-cost dual op-amp that operates on a single supply voltage, making it ideal for portable, battery-powered biomedical devices. By configuring the LM358 as an active first-order high-pass filter, the circuit not only attenuates slow-varying components and DC offsets below 0.5 Hz, but also provides a modest gain to boost the filtered signal before it reaches the ADC. This configuration enhances signal quality by ensuring that low-frequency noise—such as baseline drift and electrode motion artifacts—is effectively removed while preserving the important physiological EEG bands. The LM358's ability to operate near the lower rail and its availability in compact packages further contribute to a streamlined and power-efficient design.

From Fig 9, we can see that the gain of the filter is

$$G = 1 + \frac{R_5}{R_4}$$

$$G \approx 3.41$$

Also, the cutoff frequency of the filter will be

$$f_l = \frac{1}{2\pi R_3 C_1}$$

$$f_l \approx 0.5\ Hz$$

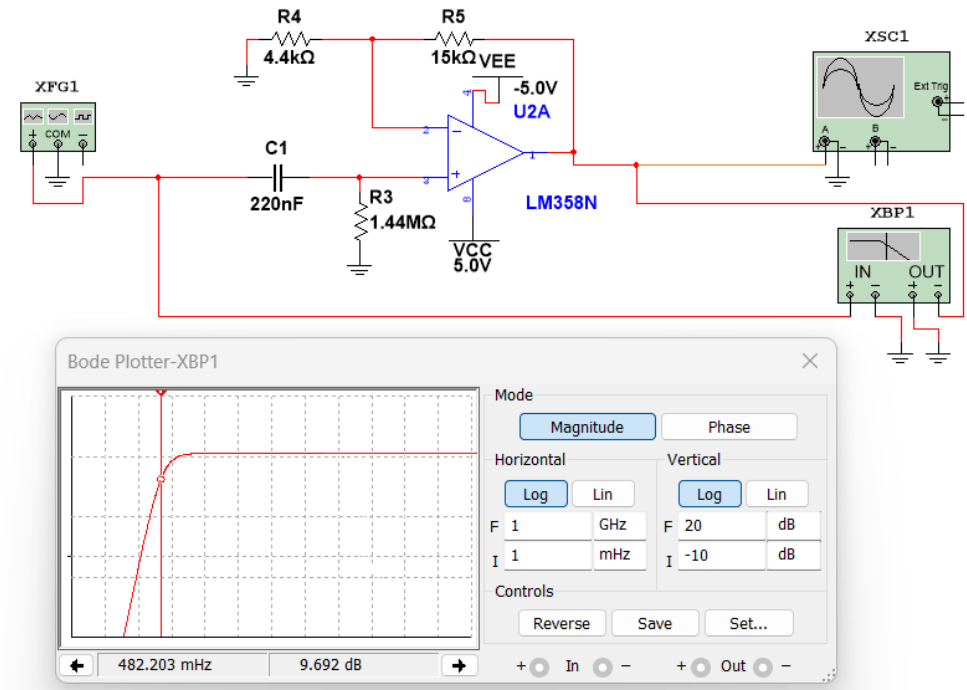

Figure 9 High Pass Filter stage and its Bode plot

Low Pass Filter

The low-pass filter is a critical component in the EEG signal conditioning circuit, designed to eliminate high-frequency noise and interference that could distort or mask the relatively low-frequency EEG signals. While brainwaves of interest typically fall below 100 Hz, various sources such as muscle activity (EMG), environmental electromagnetic noise, or digital switching noise can introduce unwanted high-frequency components into the signal.

In this project, the low-pass filter is designed with a cutoff frequency around 100 Hz, effectively attenuating frequencies above this threshold. This ensures that the signal fed into the analog-to-digital converter (ADC) contains only the relevant EEG bands—Delta (0.5–4 Hz), Theta (4–8 Hz), Alpha (8–13 Hz), Beta (13–30 Hz), and part of Gamma (30–100 Hz).

A simple first-order RC low-pass filter may be used, but to improve roll-off characteristics and maintain signal strength, an active low-pass filter using an op-amp like the LM358 is typically preferred. The active configuration allows for additional gain and buffering, reducing signal loss and improving impedance matching with the next stage (ESP32's ADC).

The low-pass filter works in tandem with the high-pass filter to form a band-pass filter, isolating the full range of useful EEG activity while rejecting both low-frequency drift and high-frequency noise. This makes it a vital step in preserving signal clarity for accurate digital processing and real-time visualization.

From Fig 10, again we can see that the gain of the filter is

$$G = 1 + \frac{R_6}{R_7}$$

$$G \approx 3.41$$

Also, the cutoff frequency of the filter will be

$$f_H = \frac{1}{2\pi R_8 C_2}$$

$$f_H \approx 0.5$$

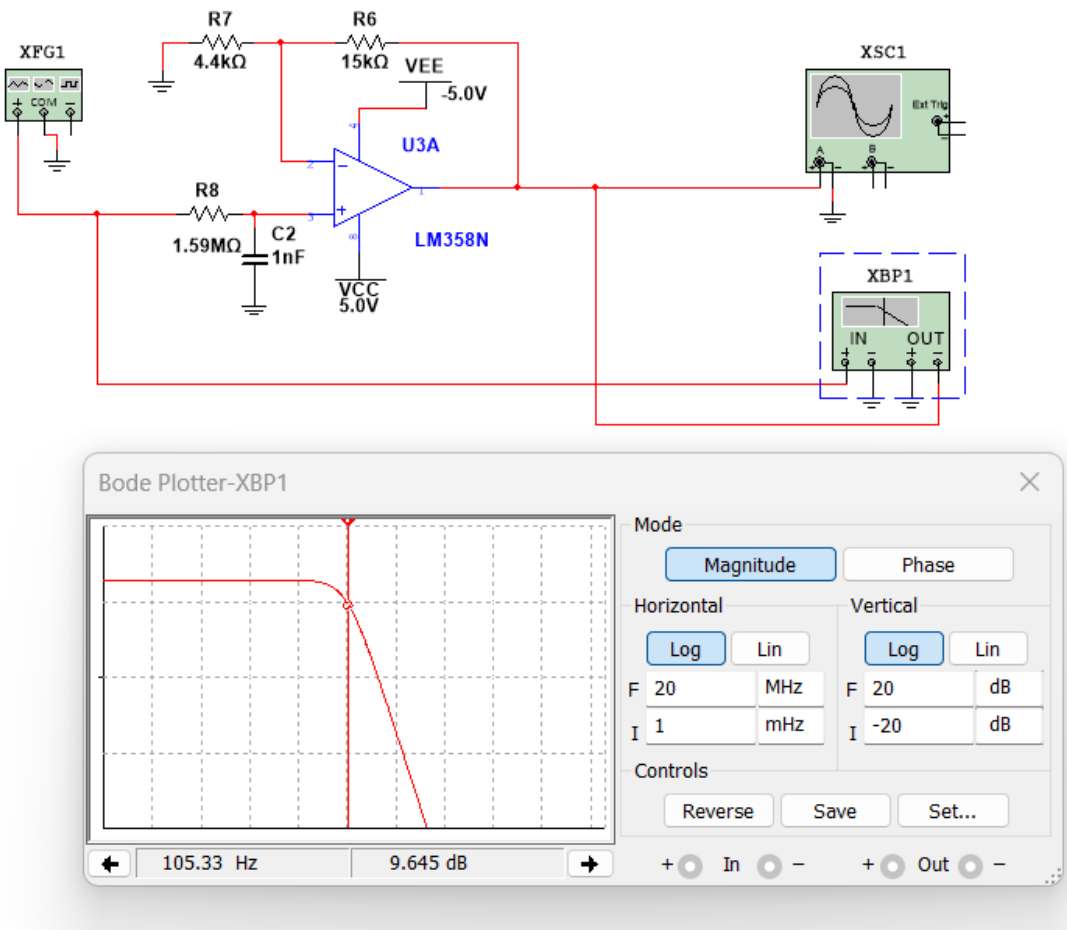

Figure 10 Low Pass Filter stage and its Bode plot

Notch Filter

The notch filter, or band-stop filter, is tailored to remove a very narrow band of frequencies—most typically the 50 Hz or 60 Hz power line interference that so often contaminates biomedical signals such as EEG. In most environments, this interference is caused by nearby electrical equipment, wall sockets, or the power supply itself, and may manifest as a pervasive, unwanted spike in the signal spectrum.

In this EEG system, a 50 Hz Twin-T notch filter is used to eliminate this electrical noise without disturbing nearby physiological brainwave frequencies. Because most EEG activity is between 0.5 Hz and 100 Hz, eliminating a narrow band around 50 Hz avoids compromising signal integrity significantly without eliminating much of the information content.

The notch filter may be implemented either in the analog domain or as part of the software digital signal processing chain. For low complexity and minimal component count, an analog

notch filter may be built directly following the amplification process. In less analog-intensive systems—such as in this project employing an ESP32—it is also usual to include a software-implemented digital notch filter via algorithms such as the Infinite Impulse Response (IIR) filter after analog-to-digital conversion.

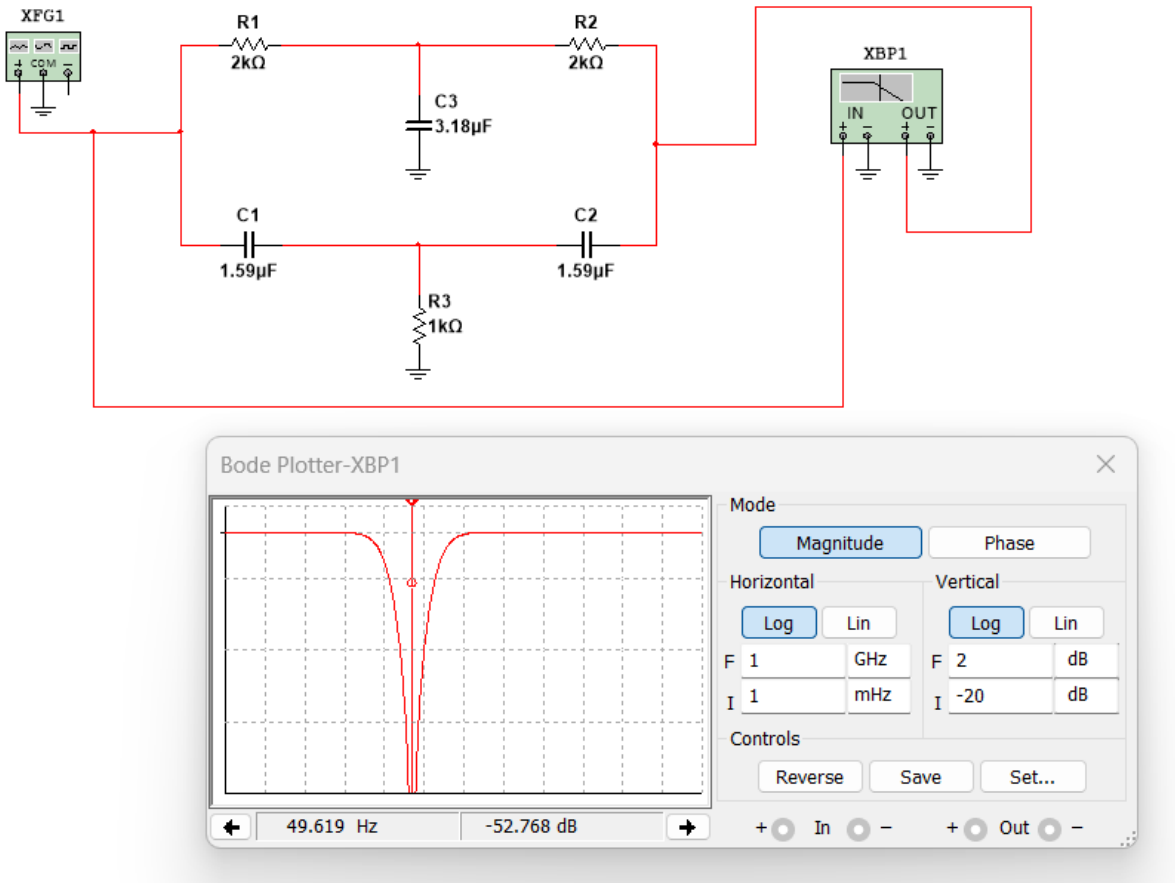

Figure 11 50 Hz Notch Filter with its Bode plot

The formula for the cutoff frequency of the Notch filter is given as

$$f_c = \frac{1}{4\pi C_1 R_3}$$

Driver Leg Circuit

The Driven Right Leg (DRL) loop is an often-employed method in biomedical signal acquisition devices such as EEG, ECG, and EMG to enhance signal quality by minimizing common-mode interference, particularly from power lines. In EEG systems, in which voltages being measured are very small (in the microvolt range), even slight common-mode noise—frequently added by the body functioning as an antenna—can dominate the true brain signal.

Functionally, the DRL circuit operates by detecting the common-mode voltage (the average of the voltages at the two measurement electrodes) and actively feeding back an inverted copy of that signal into the body through a third electrode, usually attached to the subject's leg or other neutral point. This feedback loop effectively cancels the noise, decreasing the amplitude of interference at the signal input.

In the EEG apparatus, the DRL circuit is usually constructed from an op-amp, like one half of the LM358, and functions in conjunction with the instrumentation amplifier (e.g., AD620). It ensures that the input to the amplifier stage experiences minimal noise, thus enhancing the common-mode rejection ratio (CMRR) and improving the quality of the EEG signal.

The DRL circuit is particularly beneficial in mobile or non-shielded applications where the user is more subjected to ambient electrical interference. Although it seems like a small add-on to hardware, the DRL plays an important role in enhancing the overall performance and dependability of the EEG system.

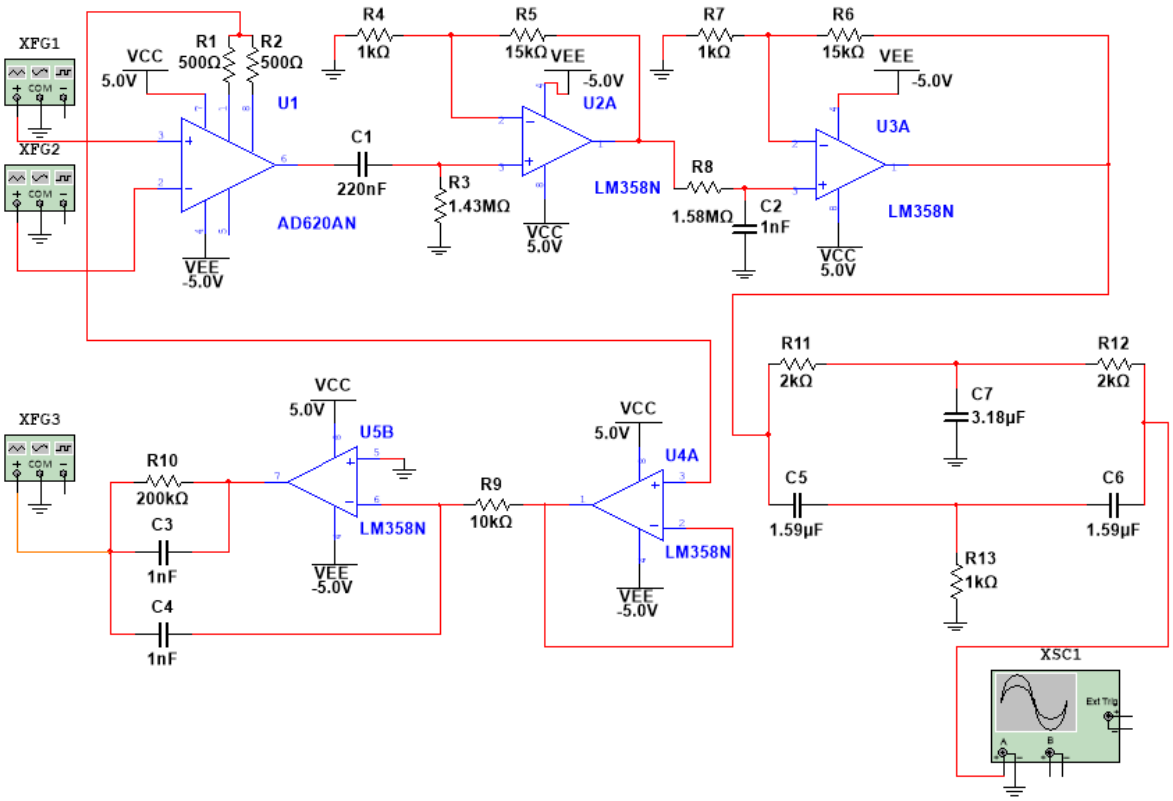

Figure 12 Circuit diagram of EEG conditioning circuit

Analog to Digital Convertor and Microcontroller

The microcontroller used for the project is ESP32-WROOM-32. This microcontroller is a powerful, cost-effective and versatile Wi-Fi, Bluetooth module developed by Espressif. It is widely known for its dual-core processor, integrated Wi-Fi and Bluetooth, and a rich set of peripherals, making it ideal for compact, real-time, and connected biomedical applications.

In this project, the ESP32-WROOM will function as an analog-to-digital convertor (ADC) and wireless data transmission.

Analog-to-Digital Convertor (ADC)

The ESP32 has several 12-bit ADC channels that are utilized to convert the analog EEG signal from the signal conditioning circuit (after filtering and amplification) into digital form. Using a suitable sampling frequency (commonly ≥250 Hz in the case of EEG), the ADC samples the fine trends of the brainwave signal over time. Whereas the internal ADC of the ESP32 could be somewhat non-linear and noisy, it is mostly adequate for single-channel EEG applications, particularly when combined with clean analog front-end circuitry.

ADC Functionality of ESP32

The ESP32 has two ADC components, ADC1 and ADC2, with several 12-bit channels. In applications that include Wi-Fi—as in the current project where EEG signals are sent via a WebSocket—ADC1 is required, as ADC2 is no longer reliable when Wi-Fi is used because of common hardware resources.

In this system, the ADC1 channel on GPIO34 is utilized to sample the analog EEG signal. GPIO34 is a dedicated input-only pin, which is suitable for stable analog signal acquisition. Nevertheless, because it does not have internal pull-up/down resistors and output capability, appropriate external signal conditioning and biasing need to be addressed prior to the signal arriving at this pin.

Power Supply and Grounding

The ESP32 operated by powering it with 3.3V DC supply. If any development board is being used and the code is being uploaded in ESP32, then it can be powered by a USB. A regulator will

internally provide the power to it. When being used in the circuit as ADC and Wireless module, ESP32 can be powered by supplying 3.3V directly to the 3V3 pin.

To ensure that the ADC input and the signal reference share the same voltage baseline, the GND pin nearest to the 3V3 pin must be connected to the common ground of the EEG conditioning circuit.

Figure 13 ESP32-WROOM-32

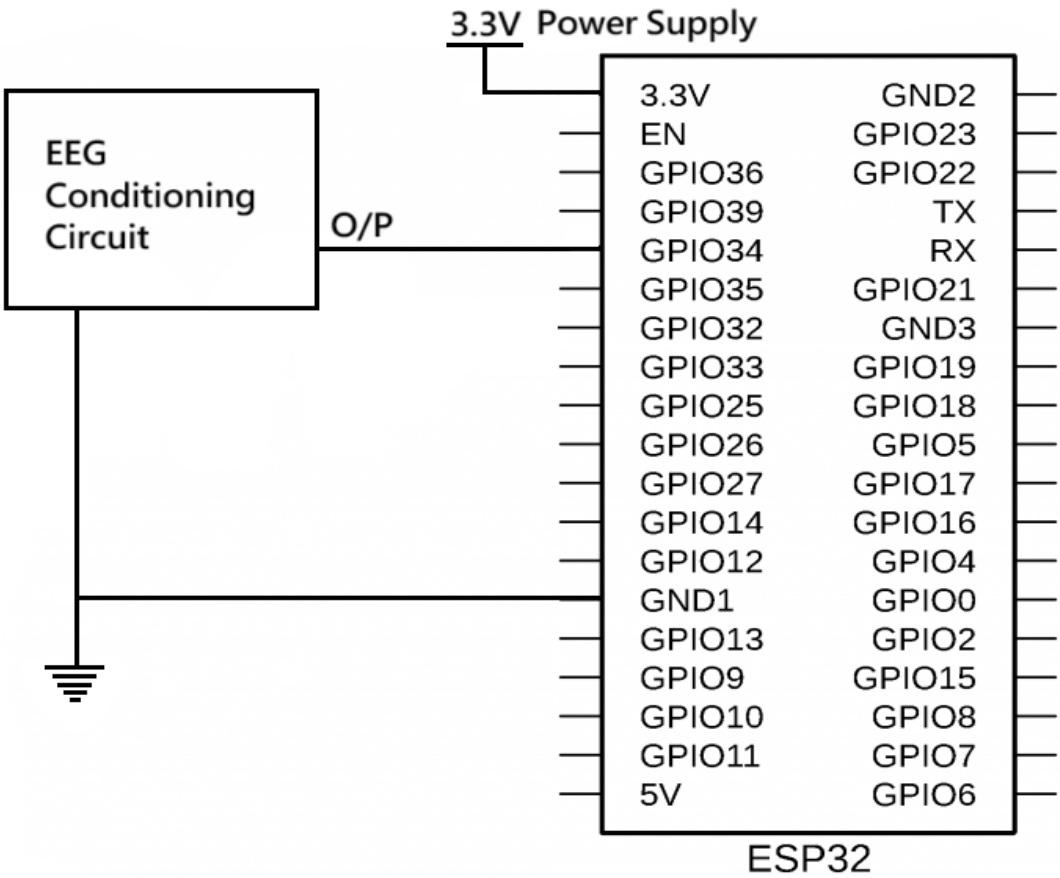

Figure 14 Connection between EEG circuit andESP32

Voltage range for ADC Input

The internal ADCs on the ESP32 are not rail-to-rail and have certain limitations:

- The effective ADC input range is approximately 0.1 V to 2.5 V.
- The ADC resolution is 12-bit, giving values from 0 to 4095.
- Inputs outside the range may clip or behave nonlinearly, especially near 0V and 3.3V.

Therefore, the EEG signal fed into GPIO34 should:

- Be centred (biased) around 1.5V.
- Have a peak-to-peak amplitude of no more than 1V, e.g., 1V–2V range.
- Be filtered and amplified to ensure it's clean and within the ADC's usable range.

Software Implementation

The software implementation of the wireless EEG system is necessary to link the hardware signal acquisition and the real-time visualization of brain activity. It consists of firmware development on the ESP32 using the Arduino IDE, WebSocket-based data transmission, and a web-based interface built using HTML and JavaScript to display and analyse the EEG signal in real-time.

Firmware Development using Arduino IDE

The Arduino IDE was used to write, compile, and upload the firmware to the ESP32 microcontroller. The simplicity of the IDE and the availability of open-source libraries made it suitable for rapid prototyping.

For coding the ESP32 microcontroller, necessary Boards are installed from Board Manager. The Board here will be ESP32 Dev Module. The necessary libraries are downloaded from the Library Manager.

The firmware performs the following tasks:

- Analog Signal Acquisition:
  EEG signals from the analog front-end are fed into GPIO34, an ADC1-compatible input pin. Using the analogRead() function, the firmware samples this pin at a set interval (e.g., 250 Hz) using a timer-based loop.

- Wi-Fi Configuration:
  The ESP32 connects to a known Wi-Fi network using hardcoded SSID and password. The WiFi.h library simplifies this process.

- WebSocket Setup:
  The firmware uses the WebSocketsServer library to set up a WebSocket server on the ESP32. Once a client (browser or mobile device) connects, EEG data is continuously streamed in real-time over the WebSocket connection.

- Data Transmission:
  The analog values (usually integers between 0 and 4095) are converted to string format or JSON and sent as WebSocket messages to the client.

Code for ESP32

```
#include <WiFi.h>
#include <WebSocketsServer.h>

const char* ssid = "asdf";  // Your SSID
const char* password = "oooo9999";   // Your Password

WebSocketsServer webSocket = WebSocketsServer(81);
const int eegPin = 34;  // EEG analog input
unsigned long lastSample = 0;
const int sampleInterval = 4;  // 4ms = 250Hz

void setup() {
  Serial.begin(115200);
  analogReadResolution(12);  // 0â€“4095
  WiFi.begin(ssid, password);
  while (WiFi.status() != WL_CONNECTED) {
    delay(500);
    Serial.print(".");
  }
  Serial.println(WiFi.localIP());

  webSocket.begin();
  webSocket.onEvent([](uint8_t n, WStype_t t, uint8_t * p, size_t l)
{});
}

void loop() {
  webSocket.loop();

  unsigned long now = micros();
  if (now - lastSample >= 4000) {  // Every 4 ms
    lastSample = now;
    int val = analogRead(eegPin);
    String payload = String(val);
    webSocket.broadcastTXT(payload);
  }
```

```
}
```

After loading this code into ESP32, open Serial monitor, set the Baud Rate to 115200 and push the reset button on ESP32. It would show that the Microcontroller has connected to the network and the temporary IP address of the ESP32. You can set a constant IP address to the microcontroller as IP address tends to change as other devices are connected to the network.

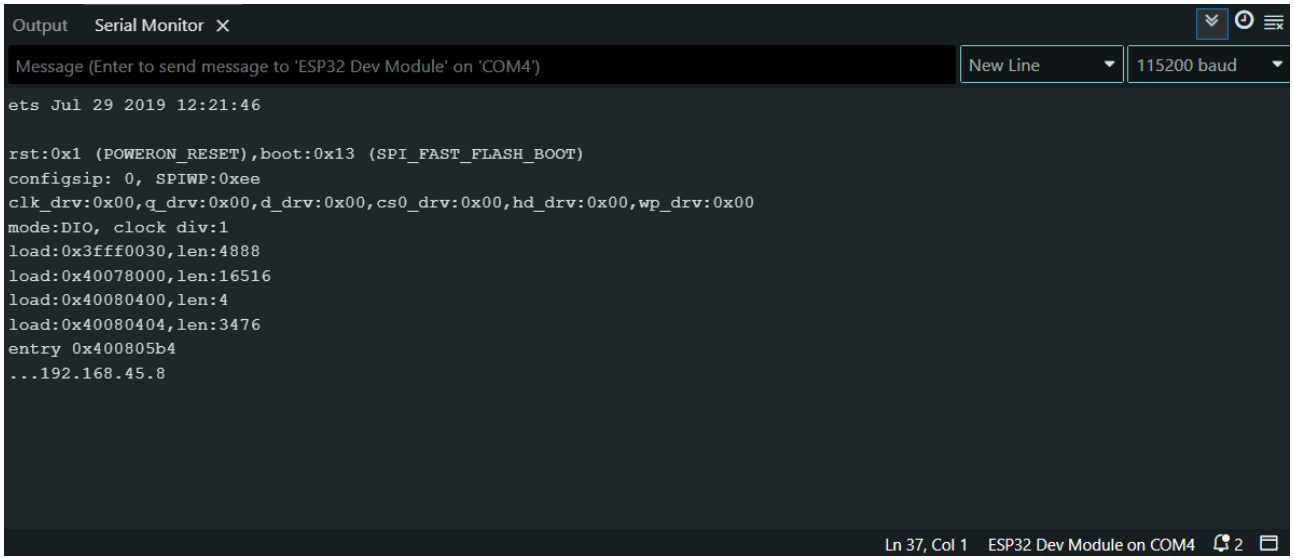

Figure 15 IP Address as viewed from Serial Monitor

Web Interface using HTML and JavaScript

To receive, process, and visualize the EEG data, a web-based interface was created using standard HTML, CSS, and JavaScript technologies. The web page can be hosted locally or accessed directly from the ESP32 if it's configured as a web server.

The main Functions of the Web Interface will be:

- WebSocket Client:
  A JavaScript WebSocket client is used to connect to the ESP32's WebSocket server. Incoming messages containing EEG data are received and buffered in real-time.

- Signal Plotting:
  The EEG waveform is plotted on a canvas using libraries like Chart.js or directly with the HTML5 <canvas> API. The waveform is updated frame-by-frame as new data arrives.

- Live Frequency Analysis:

  JavaScript functions perform Fast Fourier Transform (FFT) or apply digital band-pass filters to the buffered EEG signal to break it down into the following bands:

  - Delta (0.5–4 Hz)
  - Theta (4–8 Hz)
  - Alpha (8–13 Hz)
  - Beta (13–30 Hz)

- Band Visualization:

  The power in each band is calculated and displayed using real-time graphs

HTML + JavaScript code for Website

```
<!DOCTYPE html>
<html>
<head>
  <title>EEG Band Visualizer</title>
  <style>
    body { font-family: sans-serif; margin: 20px; }
    canvas { border: 1px solid #ccc; margin-bottom: 10px; width:
100%; height: 120px; }
    .label { font-weight: bold; margin-top: 20px; font-size: 1.1em;
}
    button { margin-right: 10px; padding: 8px 16px; font-size: 14px;
}
  </style>
</head>
<body>
  <h2>EEG Band Visualizer (250 Hz Real-Time)</h2>
  <div>
    <button id="pauseBtn">â¸ Pause</button>
    <button id="downloadBtn">ðŸ“ Export CSV</button>
  </div>

  <div class="label">Raw EEG Signal</div>
```

```
  <canvas id="rawCanvas" width="1600" height="120"></canvas>

  <div class="label">Delta (0.5-4 Hz)</div>
  <canvas id="deltaCanvas" width="1600" height="120"></canvas>

  <div class="label">Theta (4-8 Hz)</div>
  <canvas id="thetaCanvas" width="1600" height="120"></canvas>

  <div class="label">Alpha (8-13 Hz)</div>
  <canvas id="alphaCanvas" width="1600" height="120"></canvas>

  <div class="label">Beta (13-30 Hz)</div>
  <canvas id="betaCanvas" width="1600" height="120"></canvas>

  <script>
    const IP = "192.168.45.8";  // Replace with ESP32's IP
    const ws = new WebSocket(`ws://${IP}:81/`);
    const sampleRate = 250;

    const bufferLength = 1600;
    let isPaused = false;
    let raw = Array(bufferLength).fill(2048);
    let delta = Array(bufferLength).fill(0);
    let theta = Array(bufferLength).fill(0);
    let alpha = Array(bufferLength).fill(0);
    let beta  = Array(bufferLength).fill(0);

    const fullData = []; // for export

    const canvases = {
      raw: document.getElementById("rawCanvas").getContext("2d"),
      delta:
document.getElementById("deltaCanvas").getContext("2d"),
      theta:
document.getElementById("thetaCanvas").getContext("2d"),
      alpha:
document.getElementById("alphaCanvas").getContext("2d"),
```

```
    beta: document.getElementById("betaCanvas").getContext("2d"),
  };

  class BiquadFilter {
    constructor(type, fLow, fHigh, sampleRate) {
      const nyq = sampleRate / 2;
      const f1 = fLow / nyq;
      const f2 = fHigh / nyq;
      const f0 = (f1 + f2) / 2;
      const bw = f2 - f1;
      const Q = f0 / bw;
      const w0 = 2 * Math.PI * f0;
      const alpha = Math.sin(w0) / (2 * Q);
      const cos_w0 = Math.cos(w0);

      const b0 = alpha;
      const b1 = 0;
      const b2 = -alpha;
      const a0 = 1 + alpha;
      const a1 = -2 * cos_w0;
      const a2 = 1 - alpha;

      this.b0 = b0 / a0;
      this.b1 = b1 / a0;
      this.b2 = b2 / a0;
      this.a1 = a1 / a0;
      this.a2 = a2 / a0;

      this.x1 = this.x2 = this.y1 = this.y2 = 0;
    }

    process(x) {
      const y = this.b0 * x + this.b1 * this.x1 + this.b2 *
this.x2
              - this.a1 * this.y1 - this.a2 * this.y2;
      this.x2 = this.x1; this.x1 = x;
      this.y2 = this.y1; this.y1 = y;
```

```
        return y;
      }
    }

    const deltaFilter = new BiquadFilter("bandpass", 0.5, 4,
sampleRate);
    const thetaFilter = new BiquadFilter("bandpass", 4, 8,
sampleRate);
    const alphaFilter = new BiquadFilter("bandpass", 8, 13,
sampleRate);
    const betaFilter  = new BiquadFilter("bandpass", 13, 30,
sampleRate);

    function draw(ctx, data, color = "black") {
      ctx.clearRect(0, 0, ctx.canvas.width, ctx.canvas.height);
      ctx.beginPath();
      ctx.moveTo(0, 60 - (data[0] - 2048) / 8);
      for (let i = 1; i < data.length; i++) {
        ctx.lineTo(i, 60 - (data[i] - 2048) / 8);
      }
      ctx.strokeStyle = color;
      ctx.stroke();
    }

    ws.onmessage = (event) => {
      if (isPaused) return;
      const val = parseInt(event.data.trim());
      if (isNaN(val)) return;

      const d = deltaFilter.process(val);
      const t = thetaFilter.process(val);
      const a = alphaFilter.process(val);
      const b = betaFilter.process(val);

      raw.push(val);         raw.shift();
      delta.push(d + 2048); delta.shift();
      theta.push(t + 2048); theta.shift();
```

```
      alpha.push(a + 2048); alpha.shift();
      beta.push(b + 2048);  beta.shift();

      fullData.push([Date.now(), val, d, t, a, b]);

      draw(canvases.raw, raw, "#000");
      draw(canvases.delta, delta, "#0033cc");
      draw(canvases.theta, theta, "#6600cc");
      draw(canvases.alpha, alpha, "#009900");
      draw(canvases.beta, beta, "#cc6600");
    };

    // Pause/Resume
    document.getElementById("pauseBtn").onclick = () => {
      isPaused = !isPaused;
      document.getElementById("pauseBtn").textContent = isPaused ?
"â-¶ Resume" : "â□¸ Pause";
    };

    // Download CSV
    document.getElementById("downloadBtn").onclick = () => {
      const csv = fullData.map(r =>
        r.map(v => Math.round(v * 1000) / 1000).join(",")
      );
      csv.unshift("Timestamp,Raw,Delta,Theta,Alpha,Beta");
      const blob = new Blob([csv.join("\n")], { type: "text/csv" });
      const url = URL.createObjectURL(blob);
      const a = document.createElement("a");
      a.href = url;
      a.download = "eeg_data.csv";
      a.click();
    };
  </script>
</body>
</html>
```

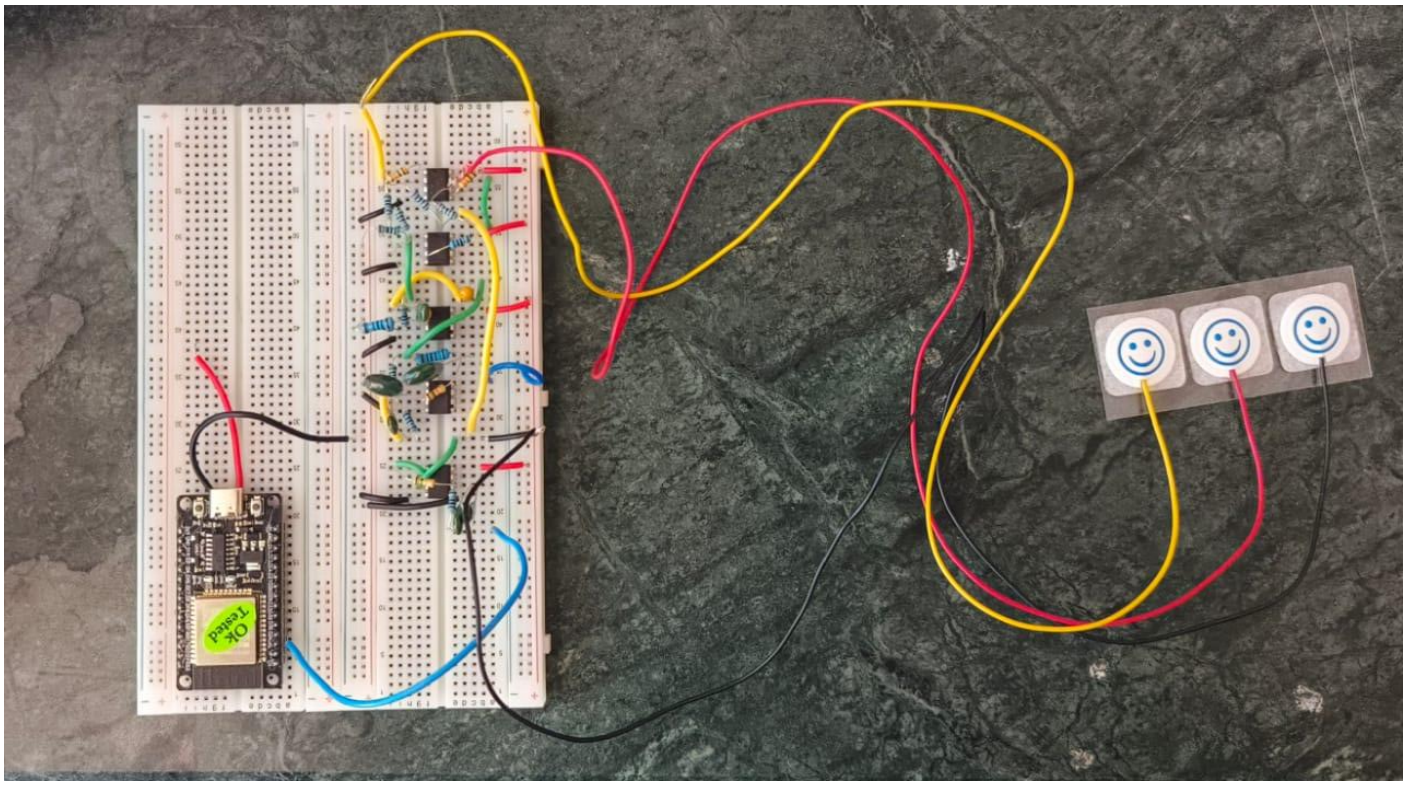

Figure 16 Breadboard implementation of the circuit

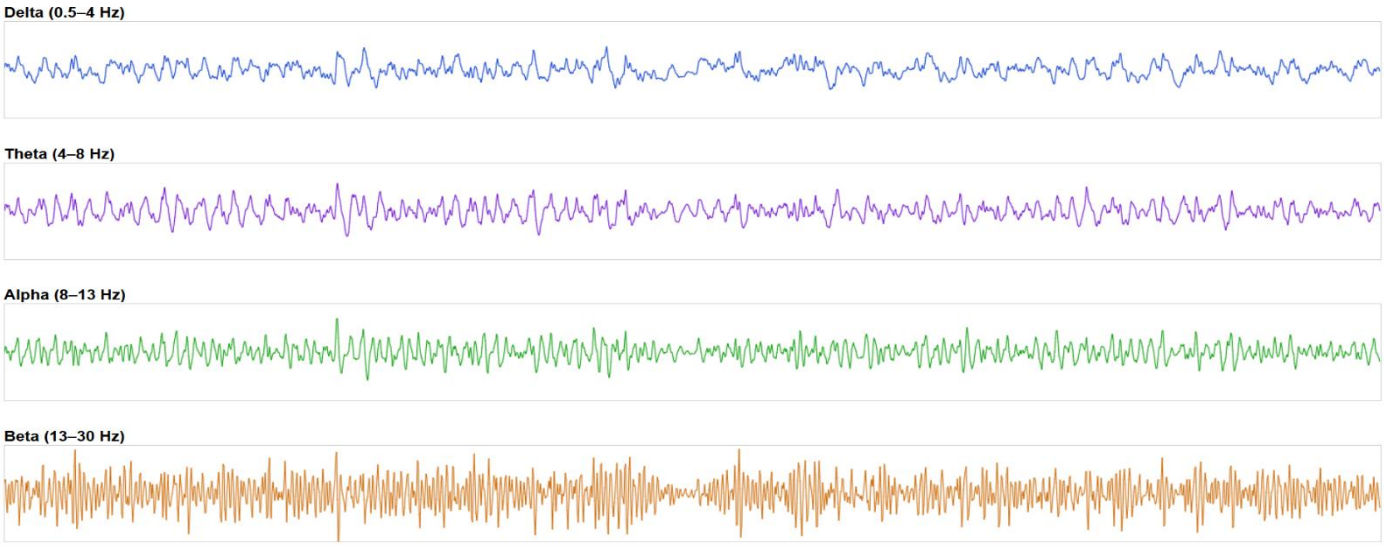

Figure 17 Brain waves separated into different bands by the website

Future Work

The wireless EEG system created in this project is a working prototype, and there are some promising areas in which this system can be further developed for more general applications, enhanced usability, and better performance:

1. Multi-Channel EEG Acquisition:
   The present implementation is restricted to a single EEG channel with limited brainwave monitoring capability but no spatial resolution. Future releases could support multi-channel acquisition (e.g., 4, 8, or 16 channels) based on advanced analog multiplexers or additional ADC chips (such as ADS1299). This would enable improved brain activity mapping in various scalp locations and support such applications as seizure detection, motor imagery classification, and neurofeedback training.

2. On-Device Signal Processing:
   Presently, the ESP32 is mostly occupied with signal acquisition and transmission. In the next versions, DSP routines (such as band-pass filtering, FFT, power spectral analysis) can be run directly on the ESP32 prior to transmission. This saves on the quantity of raw data transmitted over Wi-Fi, saves bandwidth, and provides low-latency feedback — particularly necessary for brain–computer interfaces or attention-based control systems.

3. Battery Integration and Portability:
   To truly enable the EEG system to be wearable and portable, it needs to incorporate low-power consumption and battery management circuits. It would be a good idea to use a compact lithium-polymer battery with onboard charging (through TP4056 or equivalent modules) and efficient voltage regulation (e.g., buck converters) to render the system free from cables and more convenient for daily use like meditation monitoring, sleep research, or mobile neuro-tests.

4. Machine Learning-Based Mental State Classification:
   Once the clean, organized EEG data is obtained, using machine learning models (e.g., SVM, decision trees, or neural networks) can enable automatic classification of cognitive or emotional states. For example, the classification of relaxation vs. stress,

drowsiness vs. alertness, or even intention in BCI applications. The models can be trained offline and implemented in the web interface or ESP32 using TensorFlow Lite or Edge Impulse.

5. Mobile Application Development:
   Developing a cross-platform mobile app (Android/iOS) which communicates with the EEG hardware using Wi-Fi or Bluetooth would add to usability and user experience. The app may provide features such as session logging, meditation tutorials, and dashboard customization. Further, mobile app development with Flutter or React Native can facilitate real-time visualization and even enable cloud sync or integration with analytics.

6. Better Noise Rejection and Analog Front-End Design:
   Electrophysiological signals such as EEG are naturally low in amplitude and very susceptible to noise and artifacts (due to power lines, motion, EM fields, etc.). Subsequent releases of the analog front-end could utilize:
   - Differential PCB layout and shielding
   - Better virtual ground reference
   - Active notch filters for 50/60 Hz rejection
   - Motion artifact cancellation with accelerometers or adaptive filtering

   This would significantly improve signal fidelity, particularly in ambulatory or real-world environments.

7. Data Logging and Cloud Integration:
   Including support for logging EEG data to local storage (e.g., SD card) or uploading it to cloud platforms (such as Firebase, AWS, or Google Cloud) provide long-term monitoring and remote diagnostics. For uses in clinical research, at-home neurotherapy, or longitudinal research, such features are essential. Cloud integration can also be used for remote visualization and physician/caregiver alerts.

8. Data Privacy and Security:
   Since brainwave information can disclose private personal data, upcoming implementations should focus on data security and privacy. These involve:
   - Encryption of WebSocket or HTTP traffic with TLS/SSL

- User authentication and access control of web interfaces
- Secure storage of EEG records in cloud or local storage
- Regulation compliance of health data like GDPR or HIPAA, if used in clinical or commercial contexts.

Utilizing secure protocols guarantees that the neuro-data of the user is secure, particularly in those applications that are health-related, behavior monitoring, or biometric authentication.

Overall, the project's future work would be revolving around various shortcomings and limitations of the technologies used. By addressing these issues, the wireless EEG system will become even more accurate, practical and dependable, suitable as a tool for medical professionals to monitor the health of patients accurately.

Conclusion

The construction of a single-channel wireless EEG system based on the ESP32 microcontroller is an important milestone toward affordable, real-time brainwave monitoring for academic and practical purposes. The project effectively shows the entire pipeline of EEG signal acquisition, conditioning, digitization, wireless transmission, and visualization.

At the hardware level, the system successfully combines crucial building blocks such as an instrumentation amplifier (AD620), filtering sections (high-pass, low-pass, and notch), and an ESP32 microcontroller as the ADC and Wi-Fi transmitter. Signal integrity was carefully maintained via analog front-end design, with proper biasing, grounding, and noise reduction methods. Utilizing GPIO34 on the ESP32 for ADC input guaranteed stable and precise digitization of low-amplitude EEG signals.

On the software side, the Arduino IDE was utilized for firmware programming, allowing the ESP32 to capture analog data and transmit it via WebSocket. A web-based interface developed in HTML and JavaScript provided real-time visualization and partitioning of EEG signals into traditional brainwave bands—Delta, Theta, Alpha, Beta, and Gamma—and intuitive interpretation of the neural activity.

One of the greatest strengths of this system is its wireless nature, which absolves the tethered restriction and yields greater mobility and a more convenient user experience. This makes the system especially promising for handheld neurofeedback devices, brain–computer interface (BCI) research, and well-being applications like meditation monitoring or attention monitoring.

During the project, care was taken to design a low-cost, scalable, and easy-to-use EEG system that could be used as a platform for future enhancements. The project also demonstrates the strength of open-source hardware and software platforms in leveling the playing field for access to biomedical signal processing.

Finally, this project not only accomplishes its goal of building a real-time, one-channel, wireless EEG system but also provides the foundation for future innovation in the field of neurotechnology. With additions such as multi-channel capability, mobile application integration, onboard computation, and machine learning functionality, this system has the potential to develop into a powerful tool for research and practical applications alike. Furthermore, as concerns about data privacy grow, future versions will need to integrate secure data handling and encryption mechanisms to ensure ethical and safe usage.

Bibliography

[1] Bohao, Li & Cheng, Tianshuo & Guo, Zexuan. (2021). A review of EEG acquisition, processing and application. Journal of Physics: Conference Series. 1907. 012045. 10.1088/1742-6596/1907/1/012045.

[2] Saadi, Hyem & Ferroukhi, Merzak & Attari, Mokhtar. (2011). Development of wireless high immunity EEG recording system. Electronic Devices, Systems and Applications (ICEDSA), 2011 International Conference on, proceeding. 120-124. 10.1109/ICEDSA.2011.5959060.

[3] Lin, Chin-Teng & Ko, Li-Wei & Chang, Meng-Hsiu & Duann, Jeng-Ren & Chen, Jing-Ying & Su, Tung-Ping & Jung, Tzyy-Ping. (2009). Review of Wireless and Wearable Electroencephalogram Systems and Brain-Computer Interfaces – A Mini-Review. Gerontology. 56. 112-9. 10.1159/000230807.

[4] Matiko, Joseph & Wei, Yang & Torah, Russel & Grabham, Neil & Paul, Gordon & Beeby, Stephen & Tudor, John. (2015). Wearable EEG headband using printed electrodes and powered by energy harvesting for emotion monitoring in ambient assisted living. Smart Materials and Structures. 24. 10.1088/0964 1726/24/12/125028.

[5] Jia, Wenyan & Bai, Yicheng & Sun, Mingui & Sclabassi, Robert. (2013). Design of a Wireless EEG System for Point-of-Care Applications. Proceedings of the IEEE ... annual Northeast Bioengineering Conference. IEEE Northeast Bioengineering Conference. 2013. 78-79. 10.1109/NEBEC.2013.77.

[6] Prabhakara, M & Kulkarni, Vaishali. (2014). Real time analysis of EEG signals on Android application. 1-4. 10.1109/ICAECC.2014.7002387.

[7] Guiomar Niso, Elena Romero, Jeremy T. Moreau, Alvaro Araujo, Laurens R. Krol, Wireless EEG: A survey of systems and studies, NeuroImage, Volume 269, 2023, 119774, ISSN 1053-8119.

[8] C. -T. Lin et al., "Wireless and Wearable EEG System for Evaluating Driver Vigilance," in IEEE Transactions on Biomedical Circuits and Systems, vol. 8, no. 2, pp. 165-176, April 2014, doi: 10.1109/TBCAS.2014.2316224

[9] Y. Wang, Z. Wang, W. Clifford, C. Markham, T. E. Ward and C. Deegan, "Validation of low-cost wireless EEG system for measuring event-related potentials," 2018 29th Irish Signals and Systems Conference (ISSC), Belfast, UK, 2018, pp. 1-6, doi: 10.1109/ISSC.2018.8585297.

[10] C. He et al., "Diversity and Suitability of the State-of-the-Art Wearable and Wireless EEG Systems Review," in IEEE Journal of Biomedical and Health Informatics, vol. 27, no. 8, pp. 3830-3843, Aug. 2023, doi: 10.1109/JBHI.2023.3239053.

[11] H. K. Chaiel, "Polar coded MIMO wireless EEG system," 2016 3rd Middle East Conference on Biomedical Engineering (MECBME), Beirut, Lebanon, 2016, pp. 50-53, doi: 10.1109/MECBME.2016.7745406.

[12] S. C. P. Kumar, A. Chandrasekar, A. Nagaraj, P. Gupta and S. Sekhar, "Design of an ElectroEncephaloGram (EEG) amplification circuit for neonates," *2016 International Conference on Communication and Signal Processing (ICCSP)*, Melmaruvathur, India, 2016, pp. 2069-2072, doi: 10.1109/ICCSP.2016.7754542.

[13] J. Xu, S. Mitra, C. Van Hoof, R. F. Yazicioglu and K. A. A. Makinwa, "Active Electrodes for Wearable EEG Acquisition: Review and Electronics Design Methodology," in *IEEE Reviews in Biomedical Engineering*, vol. 10, pp. 187-198, 2017, doi: 10.1109/RBME.2017.2656388.

[14] E. Habibzadeh Tonekabony Shad, M. Molinas and T. Ytterdal, "Impedance and Noise of Passive and Active Dry EEG Electrodes: A Review," in IEEE Sensors Journal, vol. 20, no. 24, pp. 14565-14577, 15 Dec.15, 2020, doi: 10.1109/JSEN.2020.3012394.

[15] Chen, Xun & Wang, Z.. (2011). Design and Implementation of a Wearable, Wireless EEG Recording System. 5th International Conference on Bioinformatics and Biomedical Engineering, iCBBE 2011. 1-4. 10.1109/icbbe.2011.5781501.

[16] https://docs.espressif.com/projects/esp-idf/en/v4.4/esp32/api-reference/peripherals/adc.html

[17] https://projecthub.arduino.cc/cetech11/implementing-web-server-on-esp32-5c24be