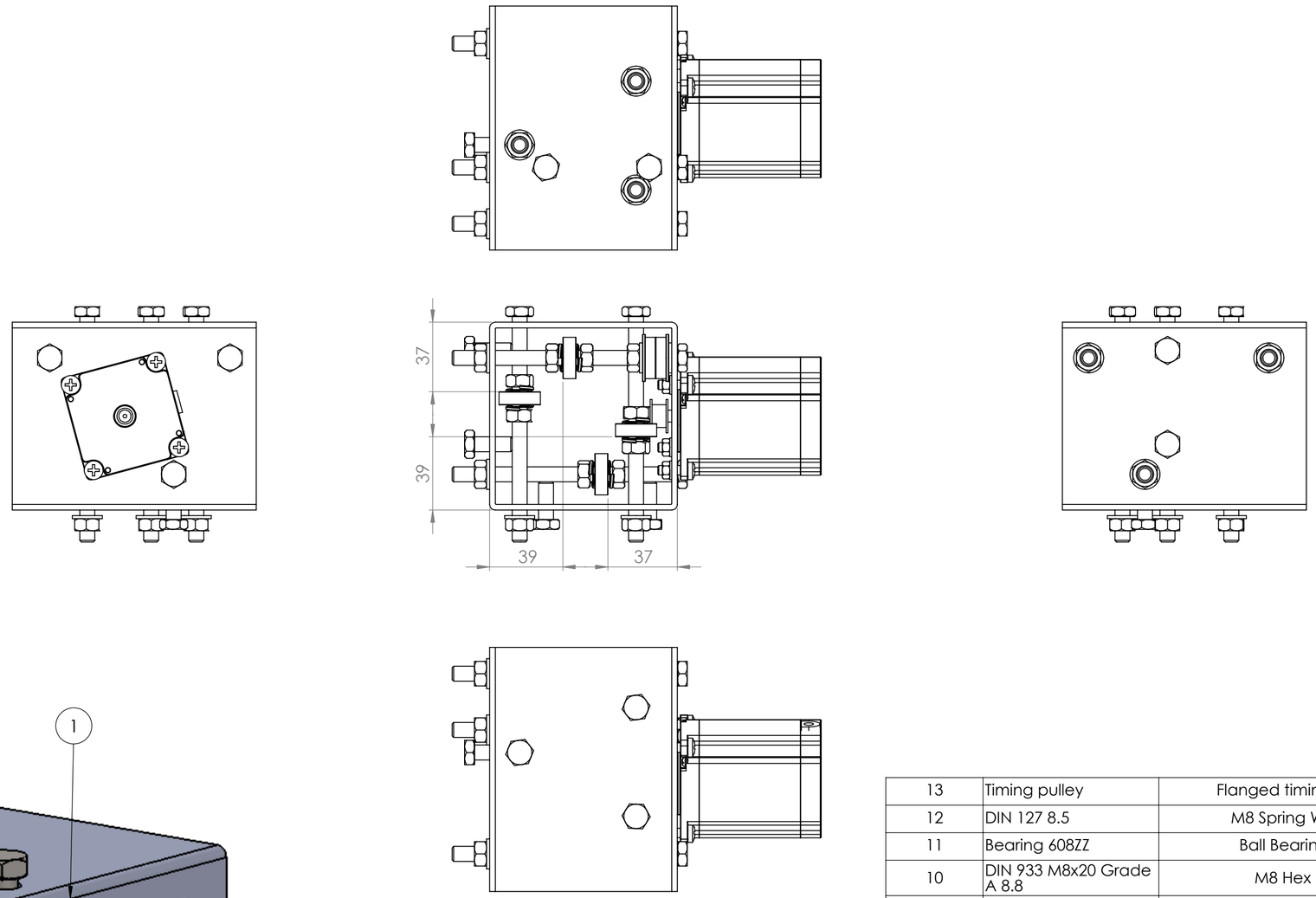

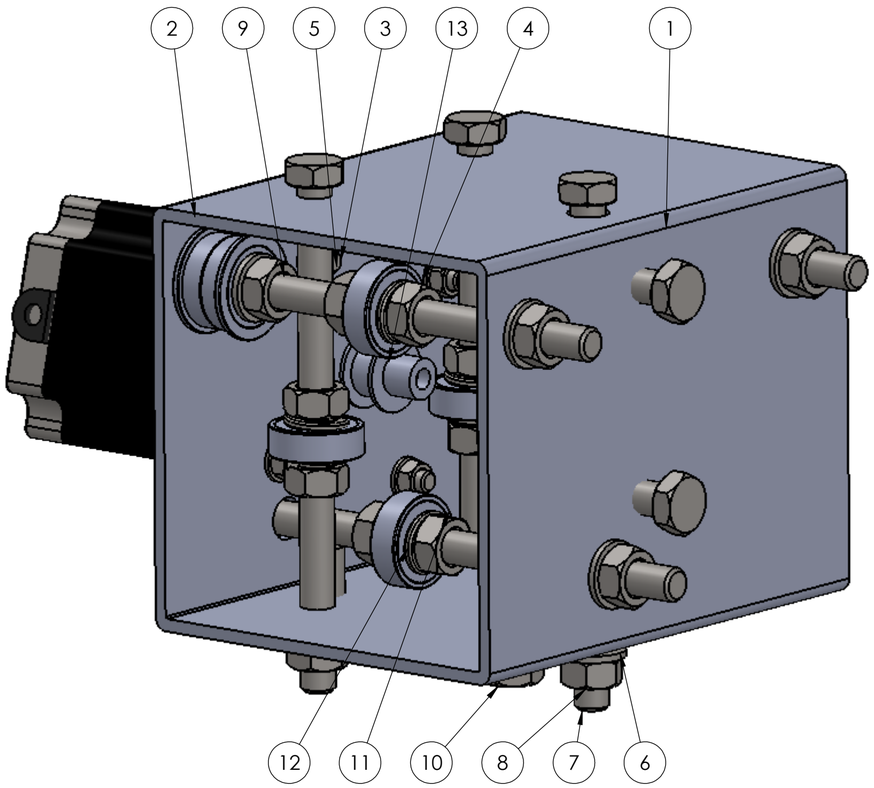

ITEM NO.	PART NUMBER	DESCRIPTION	QTY.
13	Timing pulley	Flanged timing pulley	1
12	DIN 127 8.5	M8 Spring Washer	12
11	Bearing 608ZZ	Ball Bearing fi22	6
10	DIN 933 M8x20 Grade A 8.8	M8 Hex Bolt	4
9	Bearing F608Z	Belt Ball Bearing fi22	4
8	DIN 934 M8 8.8	M8 Hex Nut	20
7	DIN 933 M8x120 Grade A 8.8	M8 Hex Bolt	6
6	DIN 125 8.4 Grade A	M8 Washer Grade A	10
5	DIN 934 M5 8.8	M5 Hex Nut	4
4	DIN 125 5.3 Grade A	M5 Washer Grade A	4
3	DIN 7985 M5x16 Grade A2f	Cross screw M5	4
2	NEMA 23 Stepper motor		1
1	Beam Short X0	SHS 100x100x3x130	1

UNLESS OTHERWISE SPECIFIED:
DIMENSIONS ARE IN MILLIMETERS
SURFACE FINISH:
TOLERANCES:
LINEAR:
ANGULAR:

FINISH:

DEBURR AND BREAK SHARP EDGES

DO NOT SCALE DRAWING

REVISION

	NAME	SIGNATURE	DATE
DRAWN			
CHK'D			
APPV'D			
MFG			
Q.A			

MATERIAL:

WEIGHT:

DWG NO. Trolley X

TITLE:

A2

SCALE:1:2

SHEET 1 OF 1