G.A. Drawing - Air-cooled Chiller
Model : XAC2S-010R2

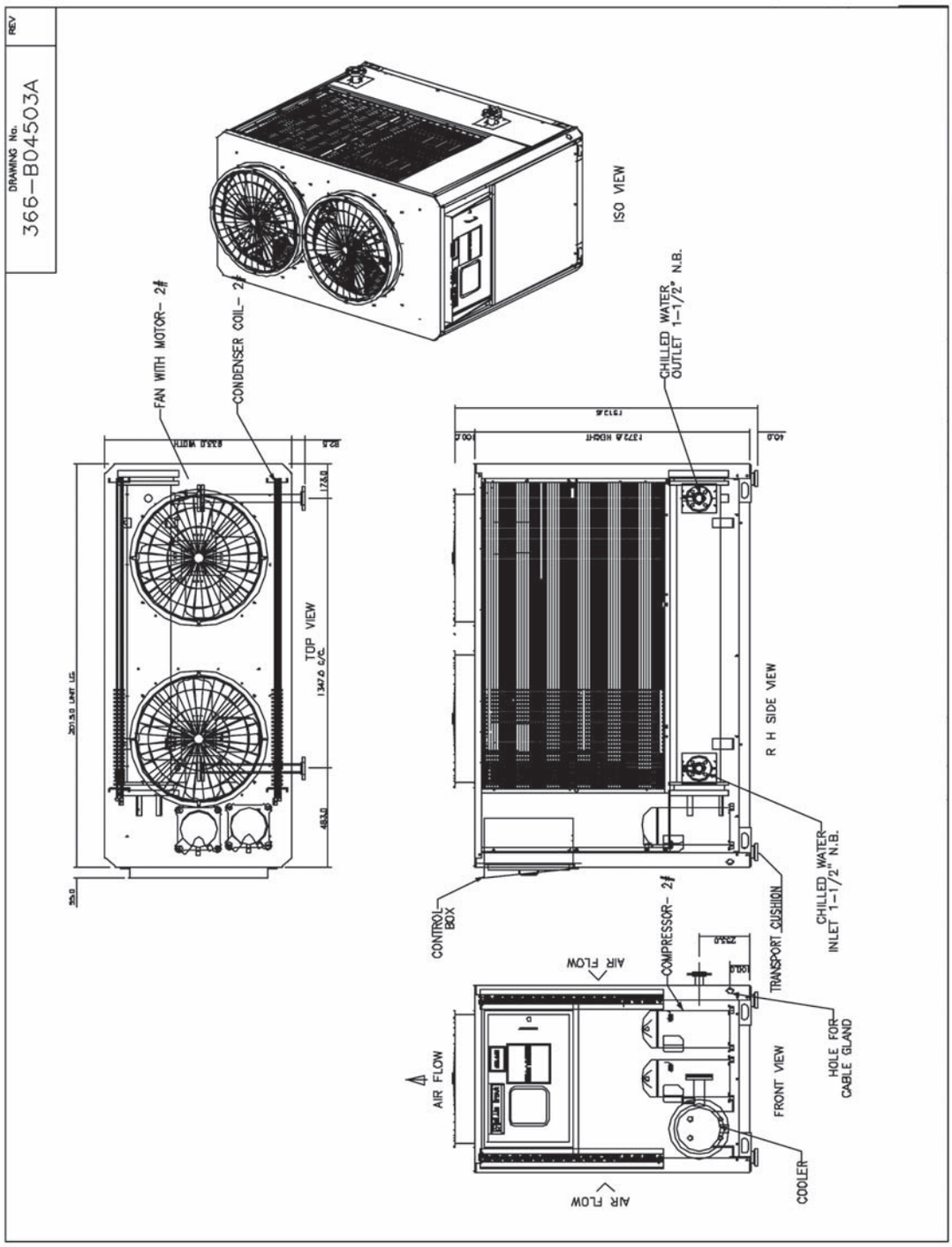
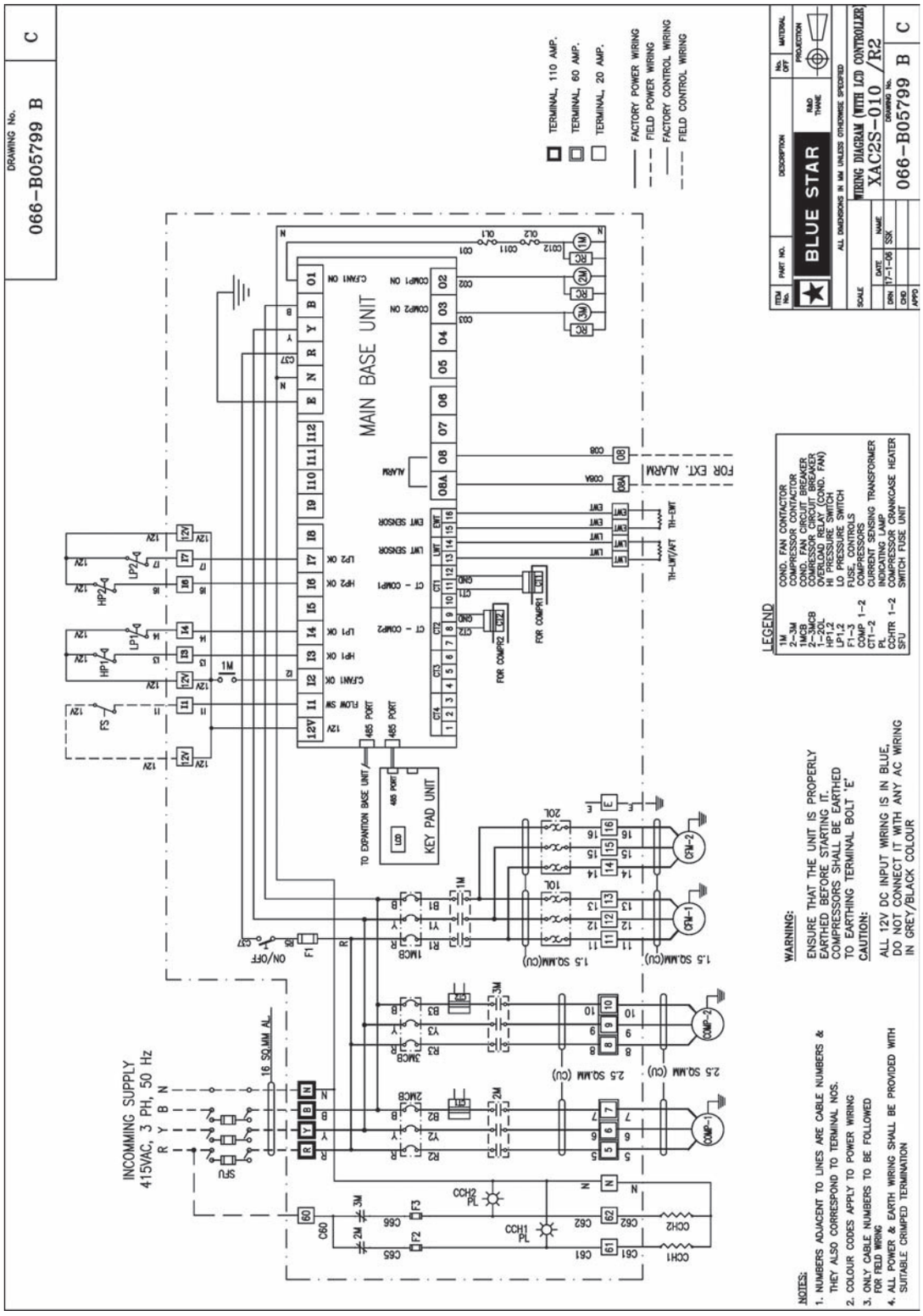
Wiring Diagram - Air-cooled Chiller
Model: XAC2S-010R2