REV	LTR	ECN NO	DESCRIPTION	DATE	APPROVED
			RELEASE	2013/03/19	蒋佳平

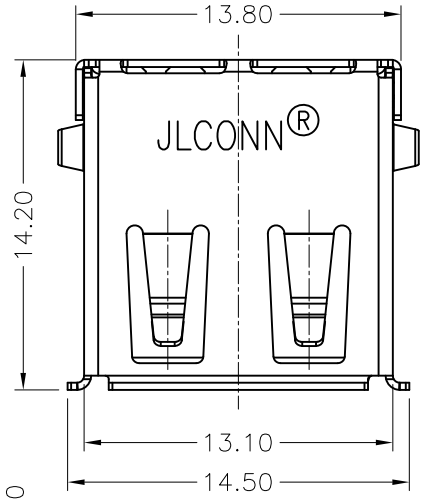

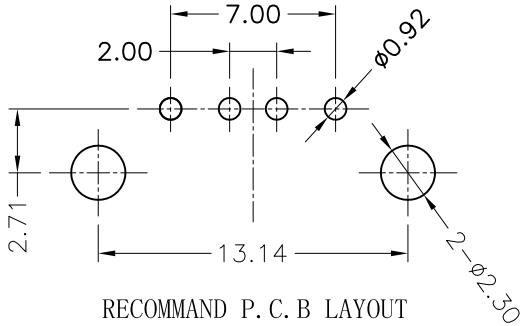

RECOMMAND P.C.B LAYOUT
TOLERANCE: ±0.10

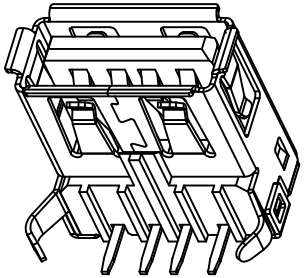

3D VIEW

NOTES:
1. MATERIAL SPECIFCATION:
   1) INSULATION MATERIAL:THERMOPLASTIC HALOGEN FREE.
   2) SHELL:COPPER ALLOY T:0.30mm
      PLATING: NICKEL
   3) TERMINAL: COPPER ALLOY T:0.25mm
      PLATING: GOLD/TIN PLATED;
2. ELECTRICAL CHARACTERISTIC:
   1) INSULATION RESISTANCE: 1000MΩ MIN;
   2) CONTACT RESISTANCE: 30mΩ MAX;
   3) WITHSTANDING VOLTAGE: 500V AC;
3. MECHANICAL CHARACTERISTICS:
   1) INSERTION FORCE:3.57Kgf Max;
   2) EXTRACTION FORCE:1.02Kgf Min;

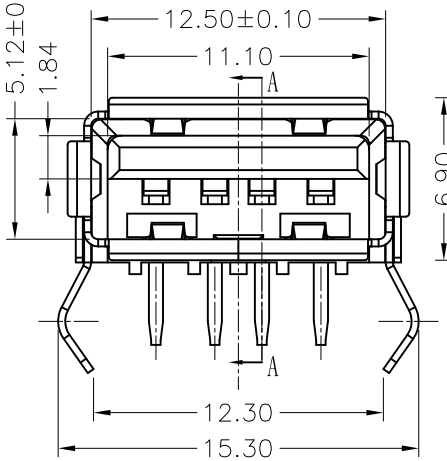

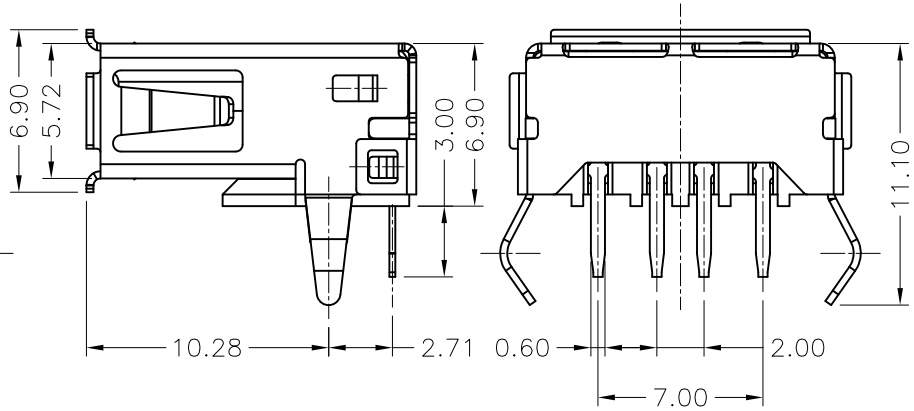

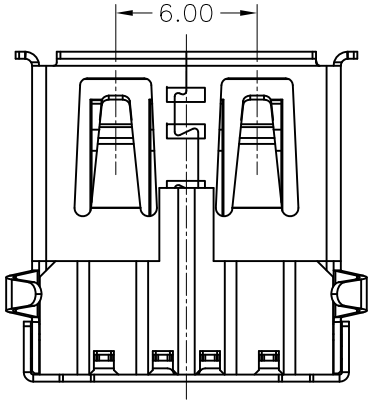

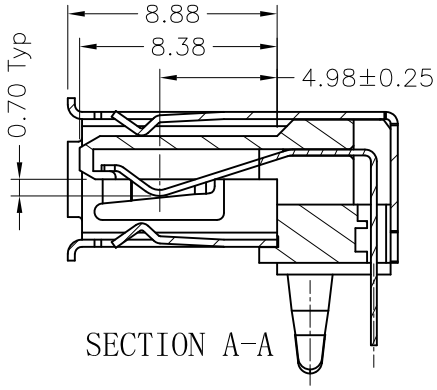

SECTION A-A

P/No / Item	Housing	Terminal	Shell	Terminal Plating	Shell Plating	LOGO
CAF042-D3113-N	PBT 黑	Bronze	Brass	Au:1u″	Ni:50u″	N
CAF042-C3113-N	PBT 白	Bronze	Brass	Au:1u″	Ni:50u″	N
CAF042-D3113	PBT 黑	Bronze	Brass	Au:1u″	Ni:50u″	Y
CAF042-C3113	PBT 白	Bronze	Brass	Au:1u″	Ni:50u″	Y
CAF042-D1113-N	PBT 黑	Copper	Brass	Au:1u″	Ni:50u″	N
CAF042-C1113-N	PBT 白	Copper	Brass	Au:1u″	Ni:50u″	N
CAF042-D1113	PBT 黑	Copper	Brass	Au:1u″	Ni:50u″	Y
CAF042-C1113	PBT 白	Copper	Brass	Au:1u″	Ni:50u″	Y

KUK JE TELE PARTS CO., LTD

DRAWN: Mike	TOLERANCES		TITLE: USB AF DIP90° T TYPE15.30
CHECK: JACK	.X ±0.30 .XX ±0.20 .XXX ±0.10 ANGLES ±3.00°	UNIT: M M SCALE: 1:1	PART NO: KJCAF042-*1113 / REV: A/1
APPROVED:	DATE: 2013/09/07	SIZE: A4	DRAWING NO: AF-042-C / SHEET: 1/1