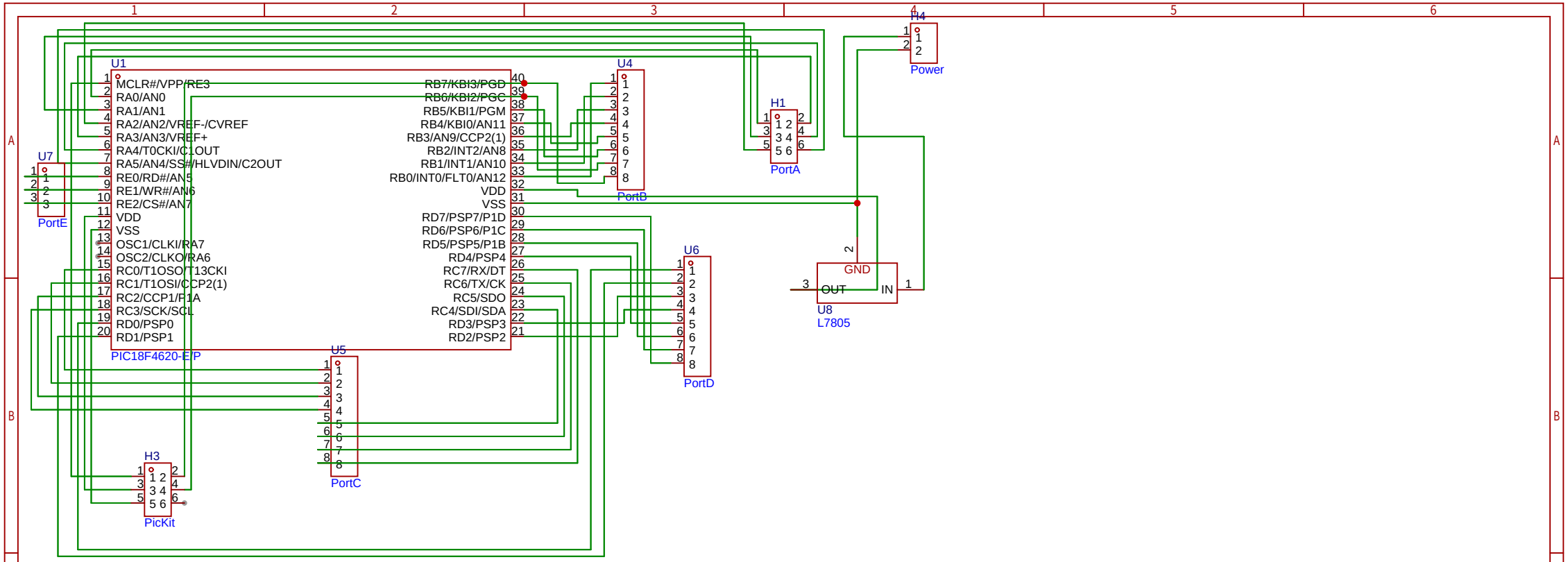

Schematic	Schematic1	Create at	2025-02-09
		Update at	2025-02-09
Board	Board1	Page	P1
Drawn		PIC18F4620 Board	
Reviewed			
		Version	Size	Page 1 Total 1
EasyEDA		V1.0	A4	EasyEDA.com