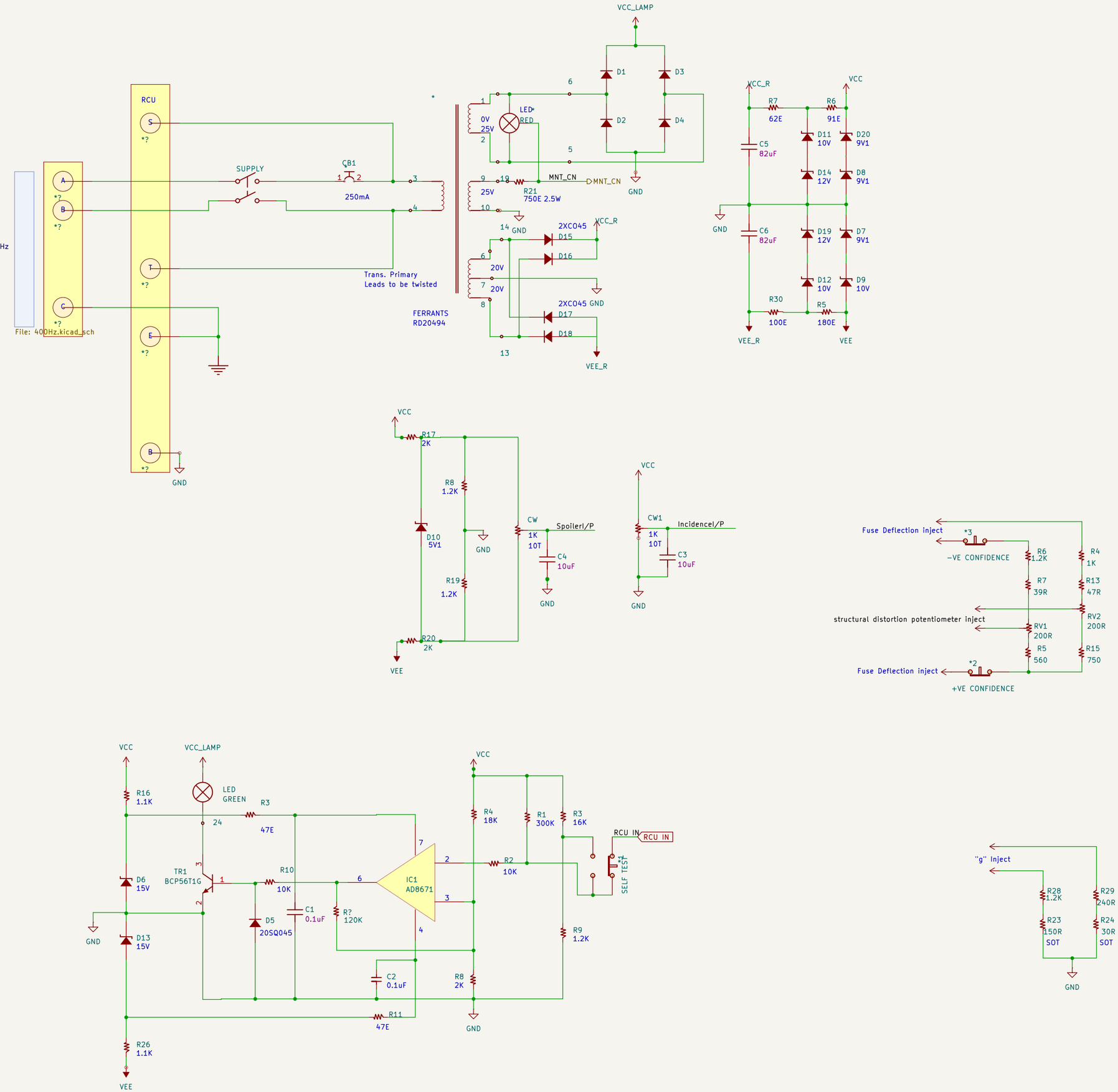
VCC_LAMP
D1
D3
D2
D4
LED
RED
0V
25V
MNT_CN
MNT_CN
R21
750E 2.5W
GND
RCU
SUPPLY
CB1
250mA
Trans. Primary
Leads to be twisted
FERRANTS
RD20494
File: 400Hz.kicad_sch
2XC045
D15
D16
D17
D18
VCC_R
VEE_R
VCC
R7
62E
R6
91E
C5
82uF
C6
82uF
D11
10V
D14
12V
D19
12V
D12
10V
D20
9V1
D8
9V1
D7
9V1
D9
10V
R30
100E
R5
180E
VEE
R17
2K
R8
1.2K
D10
5V1
R19
1.2K
R20
2K
CW
1K
10T
Spoilerl/P
C4
10uF
CW1
1K
10T
Incidencel/P
C3
10uF
Fuse Deflection inject
−VE CONFIDENCE
R6
1.2K
R4
1K
R7
39R
R13
47R
structural distortion potentiometer inject
RV1
200R
RV2
200R
R5
560
R15
750
Fuse Deflection inject
+VE CONFIDENCE
R16
1.1K
LED
GREEN
R3
47E
TR1
BCP56T1G
R10
10K
D6
15V
D13
15V
D5
20SQ045
C1
0.1uF
R?
120K
IC1
AD8671
C2
0.1uF
R11
47E
R26
1.1K
R4
18K
R1
300K
R3
16K
R2
10K
R9
1.2K
R8
2K
RCU IN
SELF TEST
"g" Inject
R28
1.2K
R29
240R
R23
150R
SOT
R24
30R
SOT