DESIGN, SIMULATION AND HARDWARE IMPLEMENTATION OF A SINUSOIDAL PWM (SPWM) GENERATOR USING OP-AMPS

A Project Report Submitted By

Arush Devadiga	**NNM24EC026**
Arya Dinesh	**NNM24EC027**
Ashlesh Y Saliyan	**NNM24EC028**
Ashley Dsouza	**NNM24EC029**

Submitted as part of the course Analog Electronics Circuits (AEC)

Bachelor of Technology
in
Electronics and Communication Engineering

NITTE (Deemed to be University) | NMAM INSTITUTE OF TECHNOLOGY

Department of Electronics & Communication Engineering

Nitte-574110, Karnataka, India

April-2026

Abstract

This project presents the design, simulation, and hardware implementation of a Sinusoidal Pulse Width Modulation (SPWM) generator using operational amplifiers. The system consists of a Wien Bridge oscillator for generating a stable sinusoidal reference waveform, a triangular wave generator acting as a high-frequency carrier, and a comparator stage to produce the final PWM output signal.

The sine wave is generated using a Wien Bridge oscillator with diode-based amplitude stabilization to maintain constant output amplitude and prevent clipping or decay of oscillations. A high-frequency triangular carrier wave (~10 kHz) is compared with the 50 Hz sine wave using an op-amp comparator to produce the SPWM signal whose duty cycle varies with the instantaneous amplitude of the sinusoidal reference.

The designed circuit was simulated using LTspice to verify waveform characteristics such as frequency, amplitude, and modulation fidelity.

The experimental and simulated results closely match the theoretical values, demonstrating the successful generation of SPWM and its demodulation. This project highlights practical understanding of waveform generation, analog modulation techniques, and circuit design using operational amplifiers, with relevance to power inverters and motor drives.

Table of Contents

Abstract ii

Table of Contents iii

1 Introduction 1

1.1 General Introduction 1

1.2 Aim 2

1.3 Methodology 2

2 System Block Diagram 3

2.1 Block Diagram 3

2.2 Design Calculations 5

3 Circuit Diagram 6

3.1 LTspice Simulation Diagram 6

3.2 Simulation Result: 7

4 Hardware Implementation 8

4.1 Experimental Setup: 8

4.2 Output Waveform 9

Conclusion 10

Reference 11

Chapter 1
Introduction

1.1 General Introduction

Sinusoidal Pulse Width Modulation (SPWM) is a widely used technique in power electronics and signal processing applications such as inverters, motor drives, and communication systems. It is used to generate a waveform that closely resembles a sine wave using switching methods. In SPWM, a low-frequency sinusoidal signal is compared with a high-frequency triangular carrier signal. This comparison produces a pulse-width modulated output whose duty cycle varies according to the instantaneous value of the sine wave, thereby encoding the sinusoidal information into a digital-like signal.

Operational amplifiers (op-amps) play a significant role in analog circuit design due to their high gain, stability, and versatility. In this project, op-amps are used for generating the sinusoidal waveform, producing the triangular carrier signal, and performing the comparison required for PWM generation. The sine wave is generated using a Wien bridge oscillator, which is well known for producing low-distortion sinusoidal outputs.

One of the main challenges in a Wien bridge oscillator is maintaining a constant amplitude of oscillation. If the gain is greater than the required value, the output waveform grows and becomes distorted due to clipping. If the gain is less, the oscillations decay and eventually stop. To overcome this issue, diode-based amplitude stabilization is used in the feedback path. The diodes automatically adjust the effective gain of the circuit, ensuring stable oscillations with nearly constant amplitude.

The triangular wave acts as a carrier signal and is compared with the sine wave using an op-amp comparator. When the sine wave is greater than the triangular wave, the output is high; otherwise, it is low. This results in a PWM signal whose pulse width varies in proportion to the sine wave amplitude. Thus, the SPWM technique effectively represents a sinusoidal waveform in the form of varying pulse widths, making it highly useful in practical electronic applications.

1.2 Aim

To design, simulate, and implement a Sinusoidal PWM (SPWM) generator using operational amplifiers and verify its output characteristics.

1.3 Methodology

The project was carried out in a systematic and structured manner involving theoretical design, LTspice simulation, and hardware verification across three stages:

1. Theoretical Design: The design process began with determining the required frequencies of the signals involved. A low-frequency sinusoidal reference signal at 50 Hz was generated using a Wien Bridge oscillator, and a high-frequency triangular wave at approximately 10 kHz was selected as the carrier signal. The oscillation frequency of the Wien Bridge oscillator is calculated using the standard relation $f = 1/(2\pi RC)$. The gain condition for sustained oscillations was set to 3, and diode-based amplitude stabilization was incorporated to maintain a constant output amplitude. Suitable values of resistors and capacitors were chosen to meet the design requirements. The comparator stage was designed to generate SPWM by directly comparing the sine and triangular signals.

2. Simulation (LTspice): The complete designed circuit was implemented in LTspice software. Transient analysis was performed to observe the output waveforms and verify the oscillation frequency, carrier frequency, and duty cycle variation of the PWM signal. The simulated results were analyzed to ensure the design met the required specifications before hardware implementation.

3. Hardware Implementation: After successful simulation, the circuit was assembled on a zero PCB (general-purpose board). The components were soldered carefully, and power was supplied through input connectors using a regulated dual-rail laboratory DC power supply (±15 V). The output waveforms were observed using a Digital Storage Oscilloscope (DSO) through output connectors to verify the frequency, duty cycle variation, and overall modulation behavior of the SPWM generator.

Chapter 2
System Block Diagram

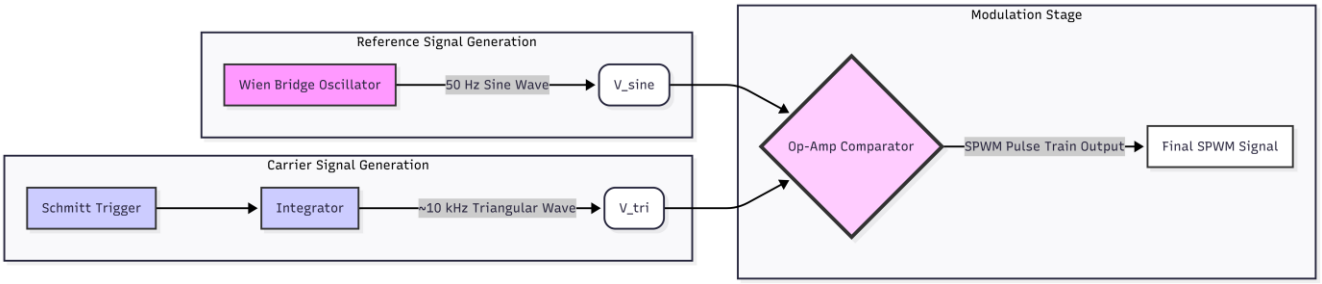

Figure 2.1: System Block Diagram of the SPWM Generator

Figure 2.1 illustrates the functional block diagram of the SPWM generator system. The system consists of three primary processing stages: the Wien Bridge Oscillator, the Triangular Wave Generator, and the Comparator Stage. Each block plays a distinct and critical role in generating the final SPWM output.

The system is powered by a dual-rail regulated DC supply (±15 V) provided through the laboratory power supply unit. This dual supply is essential for the correct operation of the op-amp stages, allowing the output waveforms to swing both above and below ground potential, which is necessary for generating bipolar sine and triangular waveforms.

The first stage is the Wien Bridge Oscillator, which generates the low-frequency (50 Hz) sinusoidal reference signal (Vsine). This oscillator uses an RC frequency-selective network in its positive feedback path and diode-based gain stabilization in the negative feedback path to maintain a constant, undistorted sinusoidal output. The output of this stage serves as the modulating signal.

The second stage is the Triangular Wave Generator, which produces a high-frequency (~10 kHz) carrier signal (Vtri). This stage typically consists of an integrator connected in a feedback loop with a comparator (Schmitt trigger), producing a linear triangular waveform whose frequency is determined by the RC time constant and the threshold levels of the comparator.

The third and final stage is the Comparator, which receives both Vsine and Vtri as inputs and generates the SPWM output (V_{out}). The output is driven HIGH when Vsine > Vtri and LOW otherwise, producing a pulse train whose duty cycle varies in direct proportion to the instantaneous amplitude of the sinusoidal reference. Optionally, a low-pass filter follows the comparator to demodulate and reconstruct the original sine wave from the PWM output.

2.1 Design Calculation

The design of the Sinusoidal PWM generator involves calculating parameters for two distinct oscillating circuits: the low-frequency sine wave generator and the high-frequency triangular carrier generator.

① Wien Bridge oscillator (Sine wave):

The target frequency for the reference sinusoidal signal is 50Hz

$$f = \frac{1}{2\pi RC}$$

Choosing $C = 100nF$ ($0.1\mu F$),

$$R = \frac{1}{2\pi f C} = \frac{1}{2\pi \times 50 \times 100 \times 10^{-9}} \approx 31.83k\Omega$$

Selected standard value: $33k\Omega$

Gain condition:

For sustained oscillations, the gain (V_v) must be at least 3.

$$A_v = 1 + \frac{R_f}{R_i} = 3 \Rightarrow R_f = 2R_i$$

In the circuit, R5 ($24k\Omega$) & R4 ($10k\Omega$) along with the diode stabilization network (R9) manage this gain condition.

② Triangular wave generator:

The carrier signal is designed for a higher frequency to ensure effective modulation, typically around 10KHz.

$$f = \frac{R_2}{4R_3R_1C1}$$

$R_1 = 2.2k\Omega$
$R_2 = 10k\Omega$
$R_3 = 10k\Omega$
$C1 = 10nF$

Calculation:

$$f = \frac{10000}{4 \times 10000 \times 2200 \times 10 \times 10^{-9}}$$

$$f = \frac{10000}{0.88} \approx 11.36KHz$$

③ Comparator stage:

Condition 1: If $V_{sin} > V_{tri}$, $V_{out} = +V_{sat}$ (High)

Condition 2: If $V_{sin} < V_{tri}$, $V_{out} = -V_{sat}$ (Low)

This results in a PWM signal with a frequency centered around 11.36KHz modulated by a 50Hz sinusoidal envelope.

Chapter 3
Circuit Diagram
3.1 LTSpice simulation diagram

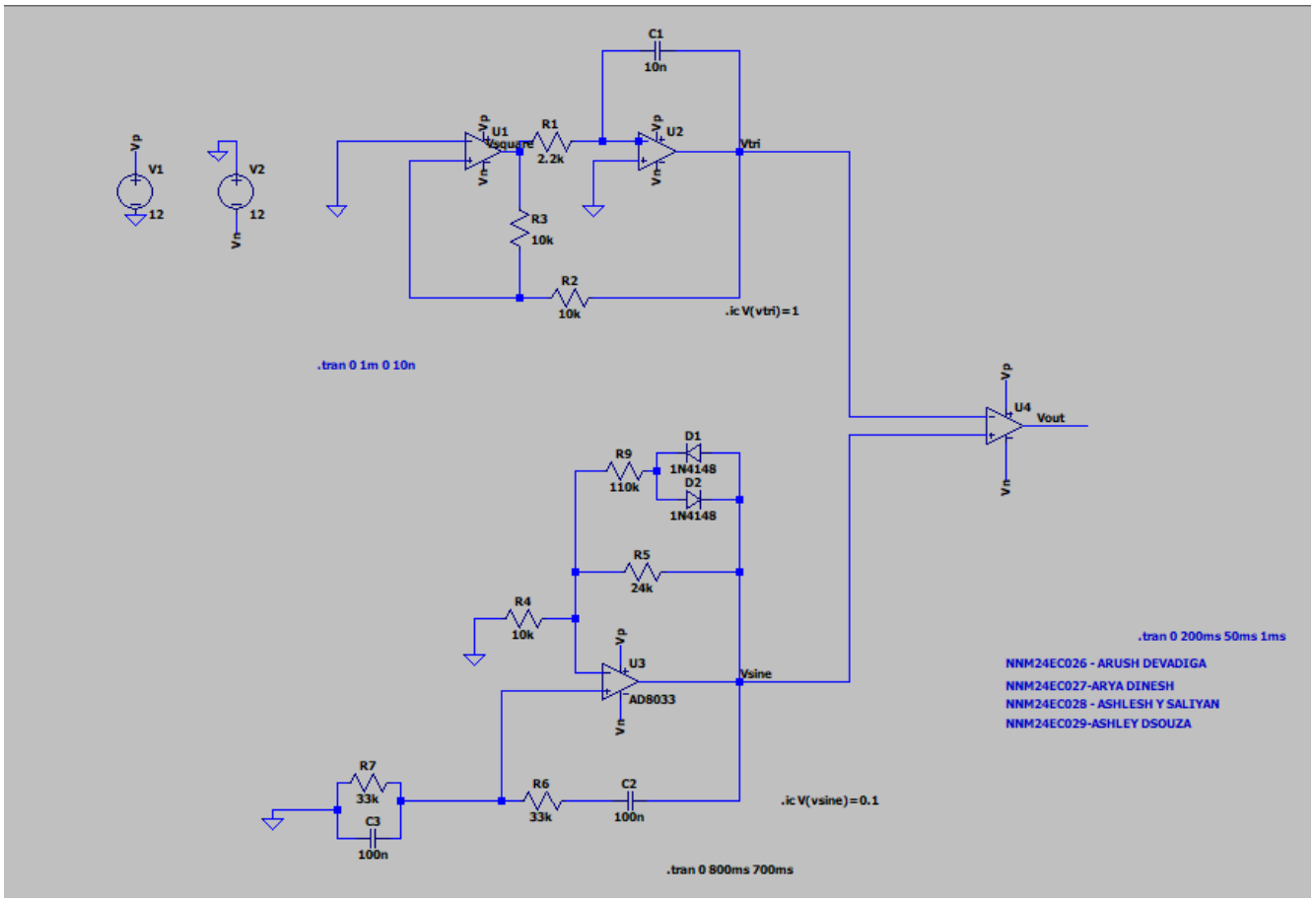

Figure 3.1: LT-spice Circuit Diagram

The circuit diagram in Figure 3.1 shows the complete SPWM generator implemented in LTspice. The three functional stages — Wien Bridge Oscillator, Triangular Wave Generator, and Comparator — are interconnected to form the complete analog SPWM system.

The Wien Bridge Oscillator is built around an op-amp with a frequency-selective RC network in the positive feedback path and a resistive voltage divider with diode stabilization in the negative feedback path. The values of R and C in the Wien network are chosen to produce a 50 Hz output. The diodes (1N4148) in the feedback path provide non-linear gain control: when the output amplitude increases, the diodes conduct more and reduce the effective

feedback resistance, thereby lowering the gain back towards 3, and vice versa. This ensures stable, low-distortion sinusoidal oscillation.

The Triangular Wave Generator stage uses an integrator op-amp in conjunction with a Schmitt trigger comparator. The Schmitt trigger provides positive feedback, generating a square wave, and the integrator converts this into a linear triangular ramp. The integration time constant RC of the integrator and the threshold voltages set by the Schmitt trigger resistor divider together determine the carrier frequency of approximately 10 kHz.

The Comparator stage takes the 50 Hz sine wave and the 10 kHz triangular wave as its two inputs. The op-amp comparator operates open-loop and produces a digital-like output (rail-to-rail) that is HIGH whenever the sinusoidal reference exceeds the triangular carrier, and LOW otherwise. This produces the SPWM signal at the output.

3.2 Simulation Result

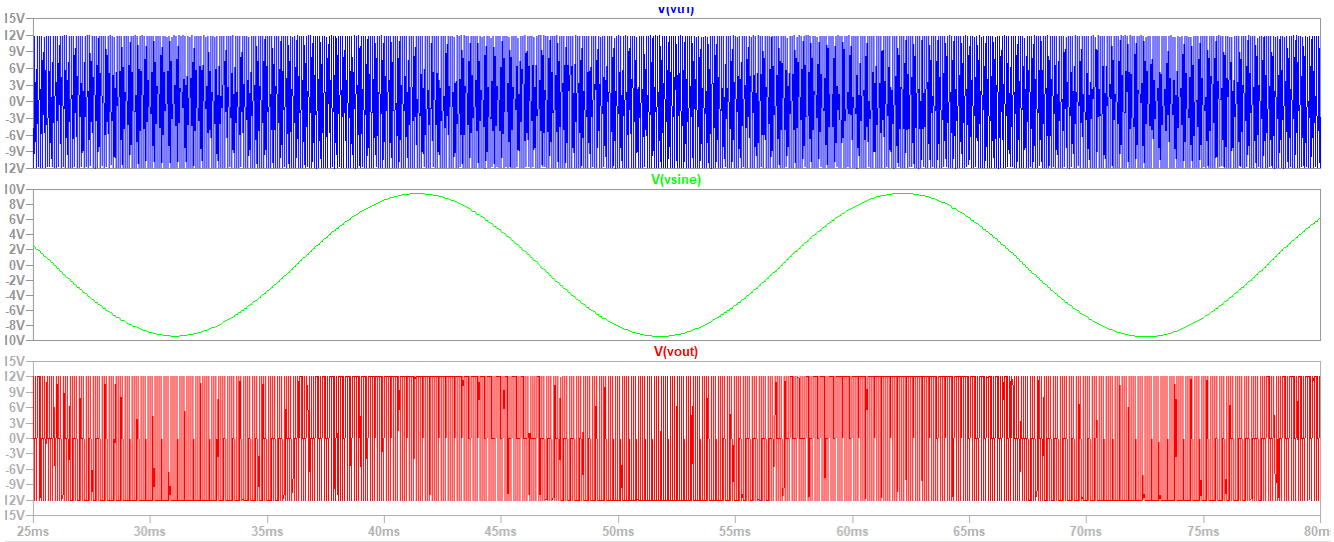

Figure 3.2: LTspice Simulation — SPWM Waveforms (Sine: Green, Triangular: Blue, SPWM Output: Red)

The LTspice transient simulation confirms the theoretical design of the SPWM generator. The simulation was run for a time span sufficient to display several complete cycles of the 50 Hz modulating signal, along with the high-frequency 10 kHz triangular carrier superimposed upon it.

Three distinct waveform traces are visible in Figure 3.2: the 50 Hz sinusoidal reference (green), the high-frequency triangular carrier (blue), and the resulting SPWM output (red). The SPWM waveform clearly shows the characteristic variation in pulse width across each half-cycle of the sine wave. Near the peaks of the sine wave, the pulses are wider (higher duty cycle), and near the zero crossings, the pulses are narrower (lower duty cycle), accurately reflecting the instantaneous amplitude of the sinusoidal reference.

Chapter 4
Hardware Implementation
4.1 Experimental Setup

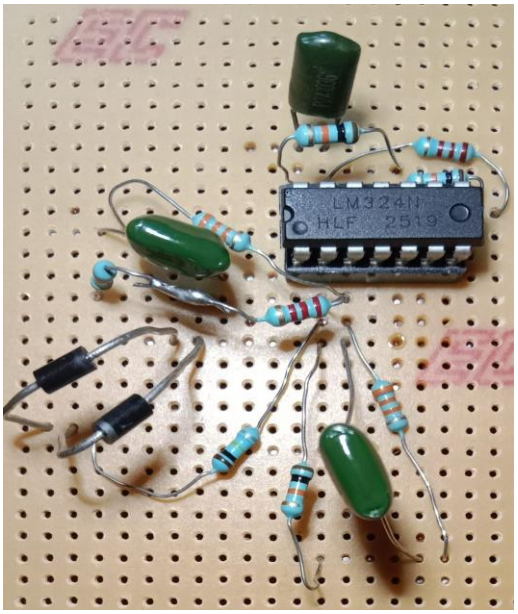

Figure 4.1 : Experimental Setup

The hardware implementation of the SPWM generator was carried out on a general-purpose zero PCB. All op-amp ICs (LM741 or equivalent) were carefully mounted and soldered onto the board. The Wien Bridge oscillator components — resistors, capacitors, and stabilizing diodes — were connected as per the designed circuit and LTspice schematic. The triangular wave generator and comparator sections were similarly assembled on the same board.

A dual-rail regulated laboratory DC power supply set to ±12 V was used to power all op-amp stages. Separate input connectors were provided for the positive supply rail, negative supply rail, and circuit ground. Proper grounding was maintained throughout the PCB to prevent noise and ensure reliable operation of the high-gain comparator stage.

Component tolerances and PCB parasitic effects were accounted for during assembly. The resistor and capacitor values used in the Wien Bridge RC network and in the triangular wave generator were carefully measured using an LCR meter prior to soldering, and closest-match standard values were selected to bring the output frequencies as close as possible to the 50 Hz and 10 kHz targets. Output connectors were provided at the output of the comparator stage for easy connection of the oscilloscope probe.

4.2 Output waveform

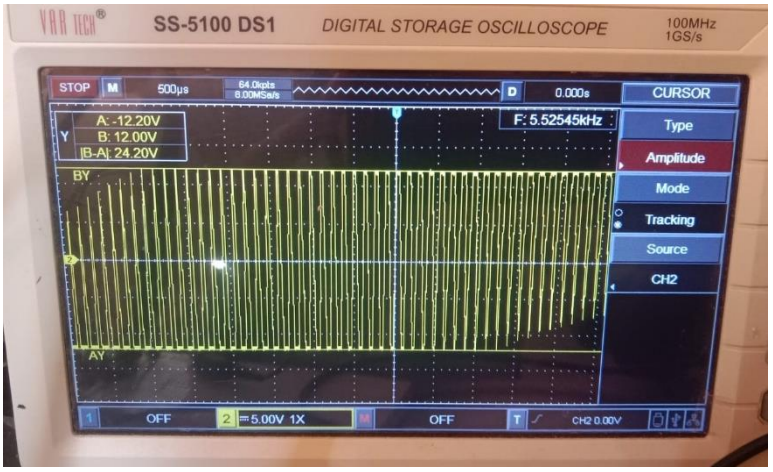

Figure 4.2: DSO Output — SPWM Waveform Observed on Digital Storage Oscilloscope

The output waveform of the implemented SPWM generator was observed using a Digital Storage Oscilloscope (DSO). The probe was connected to the output pin of the comparator stage through the output connector, while the ground probe was connected to the circuit ground.

The observed waveform was a stable PWM signal displaying the characteristic variation in pulse width that is the hallmark of SPWM. The pulse widths were clearly seen to be wider near the peaks of the underlying sinusoidal envelope and narrower near the zero-crossings, confirming the correct operation of the comparator modulation logic. The high-frequency switching of the PWM signal (approximately 10 kHz carrier) was clearly visible on the oscilloscope.

The measured carrier frequency of the output PWM signal closely matched the designed 10 kHz carrier from the triangular wave generator, with a slight deviation attributable to component tolerances and the non-ideal characteristics of the op-amps used. The modulating sinusoidal envelope reconstructed by the DSO's persistence feature or by eye across the pulse widths corresponded well to the expected 50 Hz reference signal.

Overall, the experimental results confirm that the designed SPWM generator circuit successfully produces a sinusoidally modulated PWM signal, validating both the theoretical design and the LTspice simulation.

Conclusion

The SPWM generator was successfully designed, simulated, and implemented using operational amplifiers to generate a sinusoidally modulated pulse-width signal. The system comprises three functional stages: a Wien Bridge oscillator producing a stable 50 Hz sine wave, a triangular wave generator producing a high-frequency ~10 kHz carrier, and an op-amp comparator performing the SPWM modulation. The required component values were determined using standard Wien Bridge oscillator and integrator design equations, and diode-based amplitude stabilization was incorporated to maintain constant oscillation amplitude.

The designed circuit was first verified through LTspice transient simulation, which confirmed the correct waveform shapes, frequency relationships, and duty cycle variation characteristic of SPWM. A simulated low-pass filter was used to demonstrate demodulation of the SPWM output, successfully reconstructing the original sinusoidal waveform and confirming the integrity of the modulation process.

After successful simulation, the circuit was assembled on a zero PCB using general-purpose components and powered by a regulated ±12 V dual-rail laboratory supply. The output SPWM waveform was observed using a Digital Storage Oscilloscope and showed the expected variation in pulse width corresponding to the instantaneous amplitude of the 50 Hz sine wave. The experimental results closely matched the theoretical predictions and simulation data, with minor deviations attributable to component tolerances and the non-ideal characteristics of the op-amp ICs.

This project successfully demonstrates that analog operational amplifiers can be used to implement complex signal modulation techniques without the need for digital controllers or microprocessors. The SPWM output accurately represents the sinusoidal information in a pulse-width encoded form, making it directly applicable to power inverter circuits, variable-frequency motor drives, audio class-D amplifiers, and other analog signal processing systems. The project provided valuable hands-on experience in waveform generation, analog modulation, and electronic circuit design and verification.

.

Reference

- Coughlin, R. F., & Driscoll, F. F., Operational Amplifiers and Linear Integrated Circuits, 6th Edition, Pearson Education.
- Boylestad, R. L., & Nashelsky, L., Electronic Devices and Circuit Theory, 11th Edition, Pearson Education.
- Sedra, A. S., & Smith, K. C., Microelectronic Circuits, 7th Edition, Oxford University Press.
- Texas Instruments, "LM741 Operational Amplifier Datasheet," Available: https://www.ti.com/product/LM741
- LTspice Simulator, Analog Devices, Available: https://www.analog.com/en/design-center/design-tools-and-calculators/ltspice-simulator.html
- Electronics Tutorials, "Wien Bridge Oscillator," Available: https://www.electronics-tutorials.ws/oscillator/wien_bridge.html
- Electronics Tutorials, "SPWM," Available: https://www.electronics-tutorials.ws/power/sinusoidal-pwm.html
- All About Circuits, "Pulse Width Modulation," Available: https://www.allaboutcircuits.com/

1.