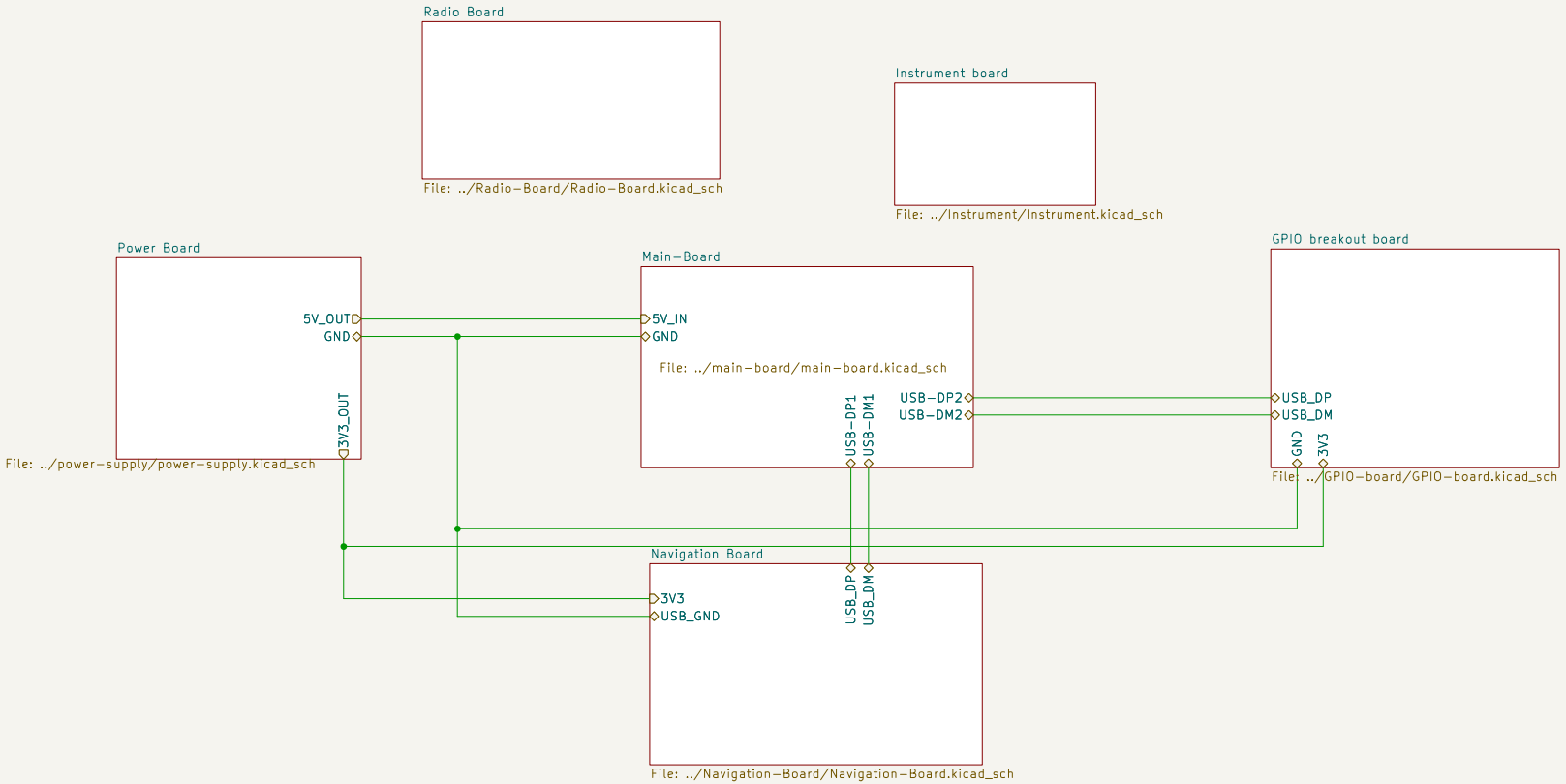

Sheet: /
File: OVERALL.kicad_sch

Title:

Size: A4	Date:	**Rev:**
KiCad E.D.A. 9.0.7		Id: 1/9

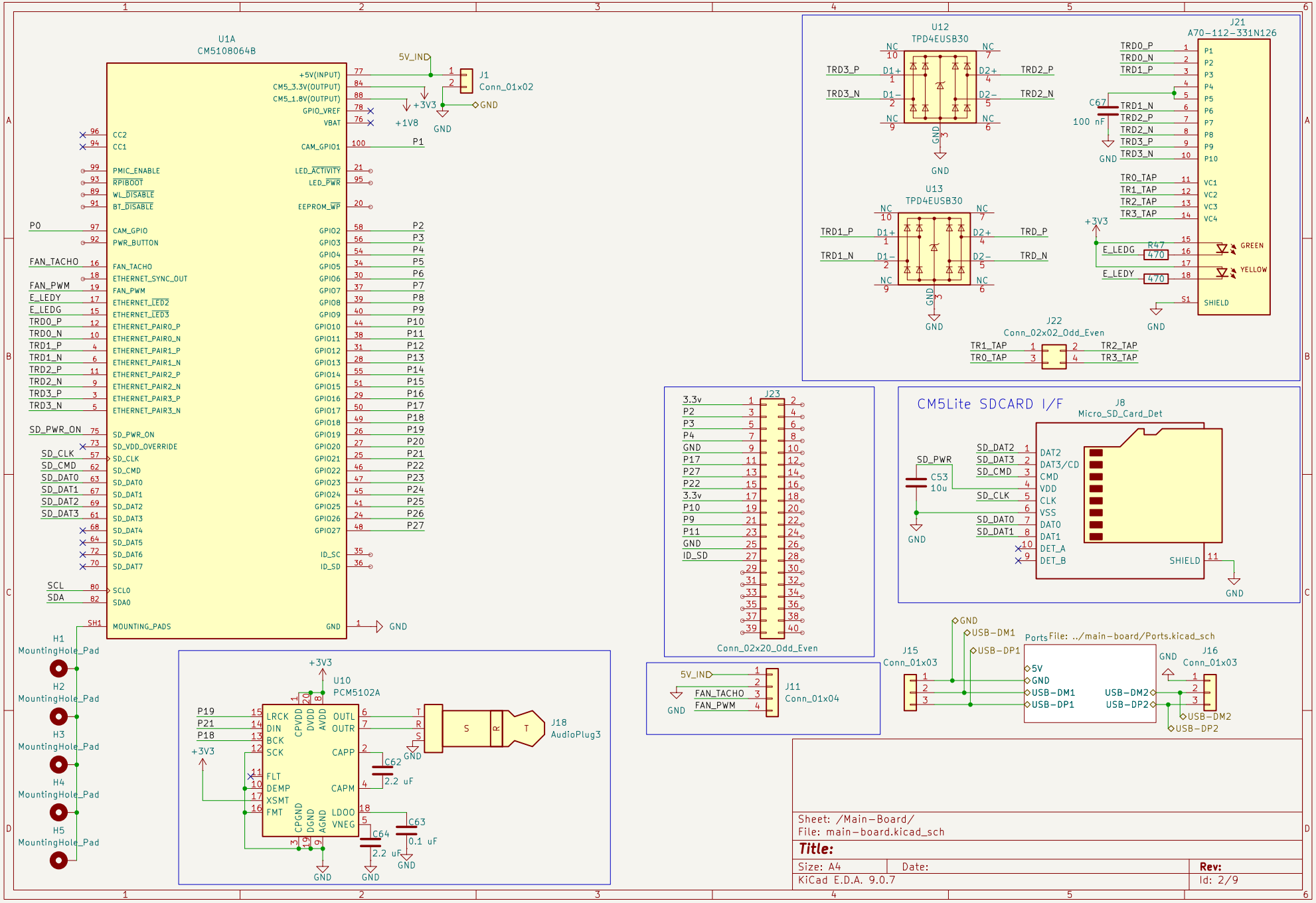
U1A
CM5108064B
+5V(INPUT)
CM5_3.3V(OUTPUT)
CM5_1.8V(OUTPUT)
GPIO_VREF
VBAT
CAM_GPIO1
LED_ACTIVITY
LED_PWR
EEPROM_WP
CC2
CC1
PMIC_ENABLE
RPIBOOT
WL_DISABLE
BT_DISABLE
CAM_GPIO
PWR_BUTTON
FAN_TACHO
ETHERNET_SYNC_OUT
FAN_PWM
ETHERNET_LED2
ETHERNET_LED3
ETHERNET_PAIR0_P
ETHERNET_PAIR0_N
ETHERNET_PAIR1_P
ETHERNET_PAIR1_N
ETHERNET_PAIR2_P
ETHERNET_PAIR2_N
ETHERNET_PAIR3_P
ETHERNET_PAIR3_N
SD_PWR_ON
SD_VDD_OVERRIDE
SD_CLK
SD_CMD
SD_DAT0
SD_DAT1
SD_DAT2
SD_DAT3
SD_DAT4
SD_DAT5
SD_DAT6
SD_DAT7
SCL0
SDA0
MOUNTING_PADS
GPIO2
GPIO3
GPIO4
GPIO5
GPIO6
GPIO7
GPIO8
GPIO9
GPIO10
GPIO11
GPIO12
GPIO13
GPIO14
GPIO15
GPIO16
GPIO17
GPIO18
GPIO19
GPIO20
GPIO21
GPIO22
GPIO23
GPIO24
GPIO25
GPIO26
GPIO27
ID_SC
ID_SD
GND
5V_IND
J1
Conn_01x02
+3V3
+1V8
P1
P2
P3
P4
P5
P6
P7
P8
P9
P10
P11
P12
P13
P14
P15
P16
P17
P18
P19
P20
P21
P22
P23
P24
P25
P26
P27
P0
H1
MountingHole_Pad
H2
MountingHole_Pad
H3
MountingHole_Pad
H4
MountingHole_Pad
H5
MountingHole_Pad
U10
PCM5102A
LRCK
DIN
BCK
SCK
FLT
DEMP
XSMT
FMT
CPVDD
DVDD
AVDD
CPGND
DGND
AGND
OUTL
OUTR
CAPP
CAPM
LDOO
VNEG
C62
2.2 uF
C63
0.1 uF
C64
2.2 uF
J18
AudioPlug3
U12
TPD4EUSB30
U13
TPD4EUSB30
TRD3_P
TRD3_N
TRD2_P
TRD2_N
TRD1_P
TRD1_N
TRD_P
TRD_N
J21
A70-112-331N126
TRD0_P
TRD0_N
TRD1_P
TRD1_N
TRD2_P
TRD2_N
TRD3_P
TRD3_N
C67
100 nF
TR0_TAP
TR1_TAP
TR2_TAP
TR3_TAP
VC1
VC2
VC3
VC4
SHIELD
E_LEDG
E_LEDY
R47
470
GREEN
YELLOW
J22
Conn_02x02_Odd_Even
J23
Conn_02x20_Odd_Even
3.3v
ID_SD
CM5Lite SDCARD I/F
J8
Micro_SD_Card_Det
SD_PWR
C53
10u
DAT2
DAT3/CD
CMD
VDD
CLK
VSS
DAT0
DAT1
DET_A
DET_B
J11
Conn_01x04
FAN_TACHO
FAN_PWM
J15
Conn_01x03
J16
Conn_01x03
USB-DM1
USB-DP1
USB-DM2
USB-DP2
5V
Ports File: ../main-board/Ports.kicad_sch
Sheet: /Main-Board/
File: main-board.kicad_sch
Title:
Size: A4
Date:
Rev:
KiCad E.D.A. 9.0.7
Id: 2/9

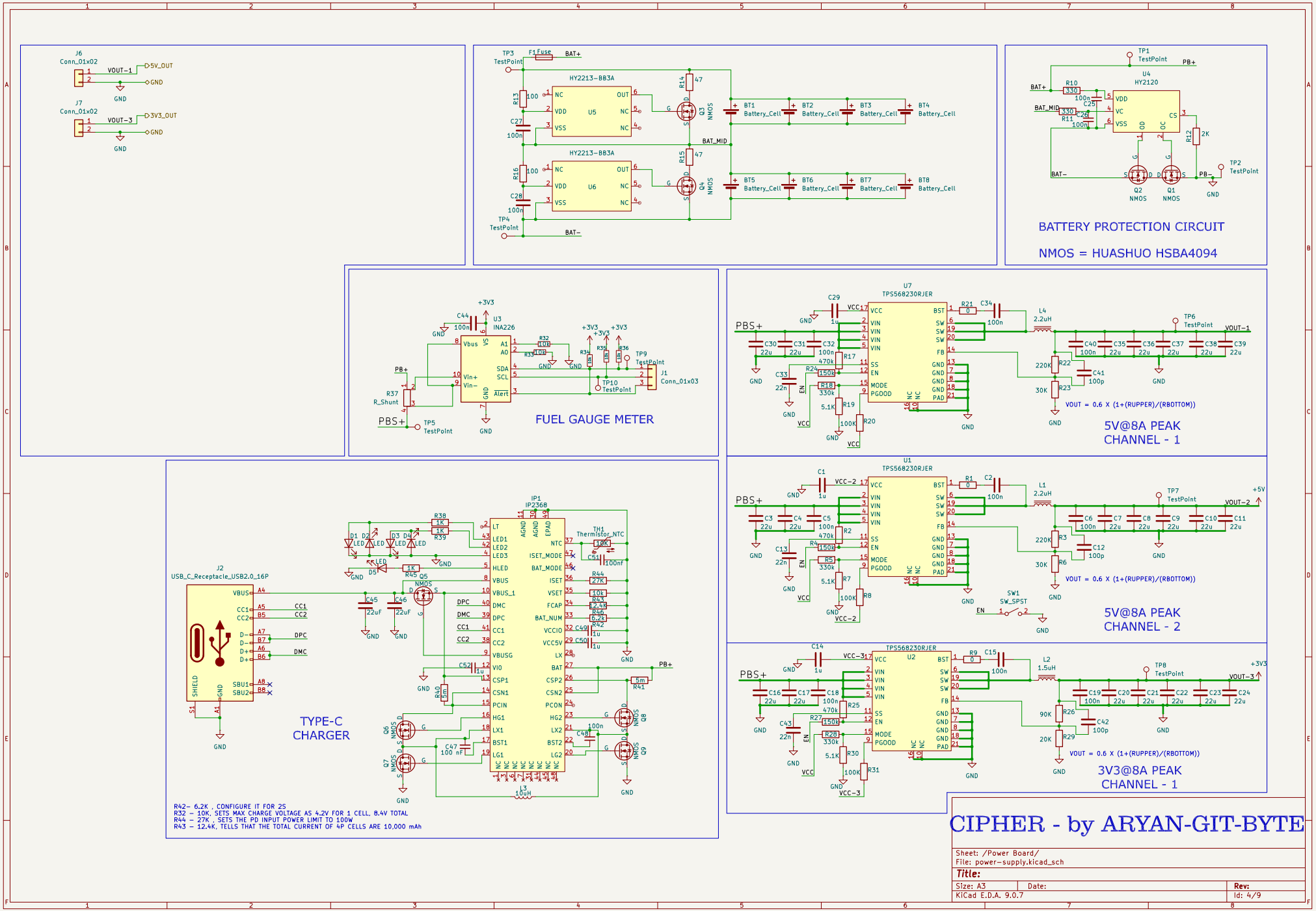
J6
Conn_01x02
VOUT-1
5V_OUT
GND
J7
Conn_01x02
VOUT-3
3V3_OUT
TP3
TestPoint
F1 Fuse
BAT+
HY2213-BB3A
U5
U6
R13
R14
R15
R16
C27
C28
Q3
Q4
NMOS
BAT_MID
BT1 Battery_Cell
BT2 Battery_Cell
BT3 Battery_Cell
BT4 Battery_Cell
BT5 Battery_Cell
BT6 Battery_Cell
BT7 Battery_Cell
BT8 Battery_Cell
TP4
TestPoint
BAT-
TP1
TestPoint
PB+
U4
HY2120
R10
C25
C26
R11
R12
Q2
Q1
TP2
TestPoint
BATTERY PROTECTION CIRCUIT
NMOS = HUASHUO HSBA4094
U3
INA226
C44
R32
R33
R34
R35
R36
TP9
TestPoint
J1
Conn_01x03
TP10
TestPoint
R37
R_Shunt
TP5
TestPoint
FUEL GAUGE METER
U7
TPS568230RJER
C29
R21
C34
L4
2.2uH
TP6
TestPoint
VOUT-1
C30
C31
C32
C33
R17
R24
R18
R19
R20
C40
C35
C36
C37
C38
C39
R22
R23
C41
VOUT = 0.6 X (1+(RUPPER)/(RBOTTOM))
5V@8A PEAK
CHANNEL - 1
U1
TPS568230RJER
C1
R1
C2
L1
2.2uH
TP7
TestPoint
VOUT-2
+5V
C3
C4
C5
C13
R2
R4
R5
R7
R8
C6
C7
C8
C9
C10
C11
R3
R6
C12
SW1
SW_SPST
VOUT = 0.6 X (1+(RUPPER)/(RBOTTOM))
5V@8A PEAK
CHANNEL - 2
U2
C14
R9
C15
L2
1.5uH
TP8
TestPoint
VOUT-3
+3V3
C16
C17
C18
C43
R25
R27
R28
R30
R31
C19
C20
C21
C22
C23
C24
R26
R29
C42
VOUT = 0.6 X (1+(RUPPER)/(RBOTTOM))
3V3@8A PEAK
CHANNEL - 1
J2
USB_C_Receptacle_USB2.0_16P
VBUS
CC1
CC2
DPC
DMC
SHIELD
IP1
IP2368
TH1
Thermistor_NTC
R38
R39
R45
Q5
C45
C46
R40
C47
C48
C49
C50
C51
C52
R41
R42
R43
R44
R46
Q6
Q7
Q8
Q9
L3
10uH
TYPE-C
CHARGER
R42- 6.2K , CONFIGURE IT FOR 2S
R32 - 10K, SETS MAX CHARGE VOLTAGE AS 4.2V FOR 1 CELL, 8.4V TOTAL
R44 - 27K , SETS THE PD INPUT POWER LIMIT TO 100W
R43 - 12.4K, TELLS THAT THE TOTAL CURRENT OF 4P CELLS ARE 10,000 mAh
CIPHER - by ARYAN-GIT-BYTE
Sheet: /Power Board/
File: power-supply.kicad_sch
Title:
Size: A3
Date:
Rev:
KiCad E.D.A. 9.0.7
Id: 4/9

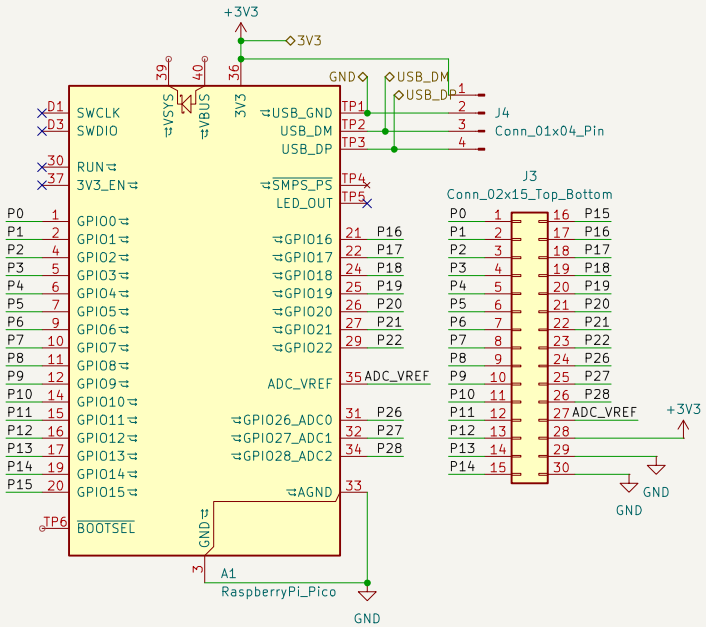

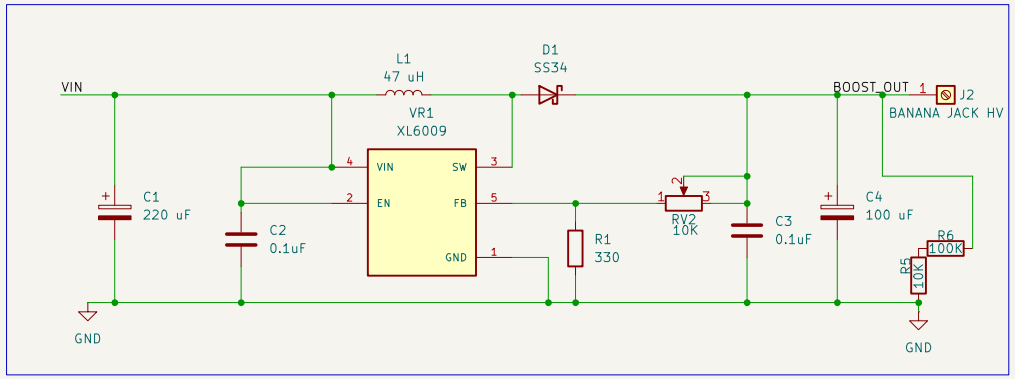

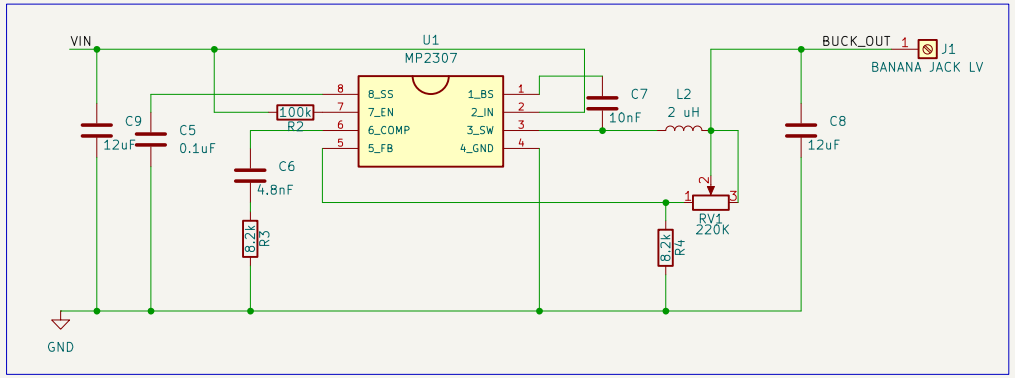

Sheet: /GPIO breakout board/
File: GPIO-board.kicad_sch

Title:

Size: A4	Date:	**Rev:**
KiCad E.D.A. 9.0.7		Id: 5/9

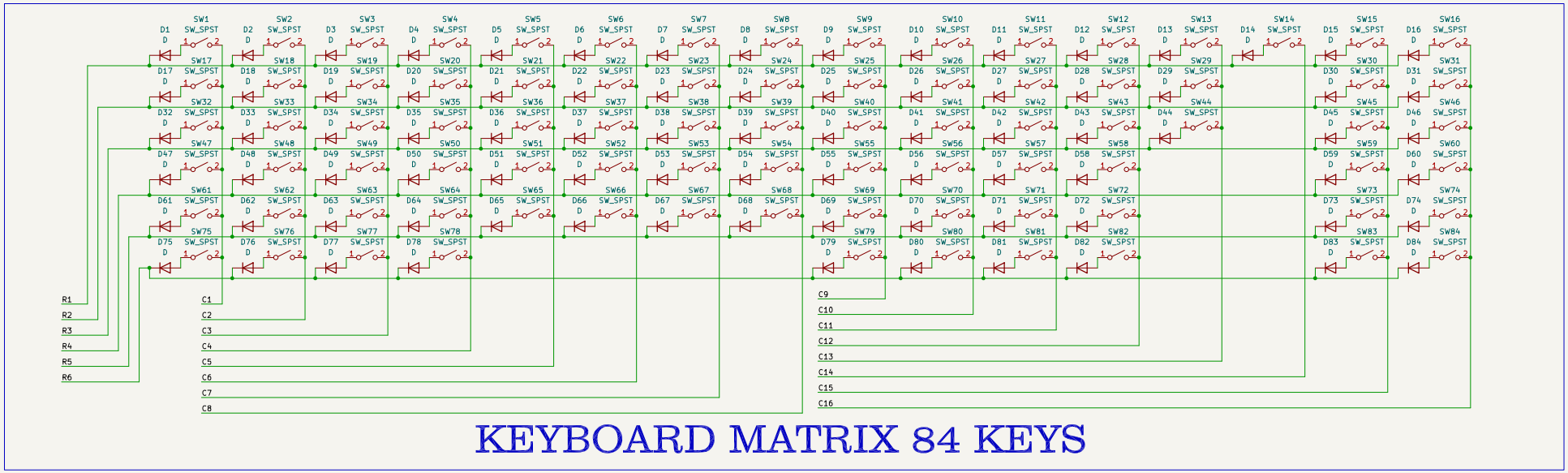

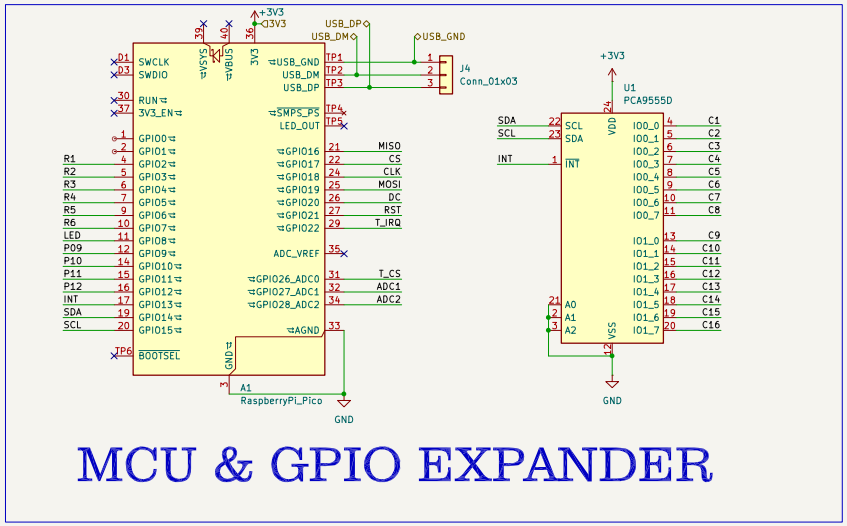

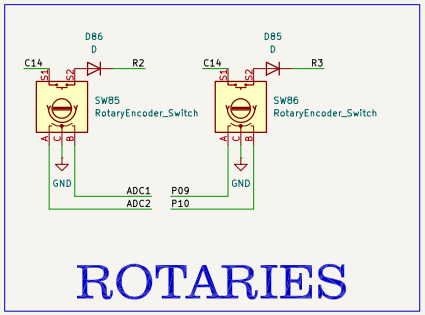

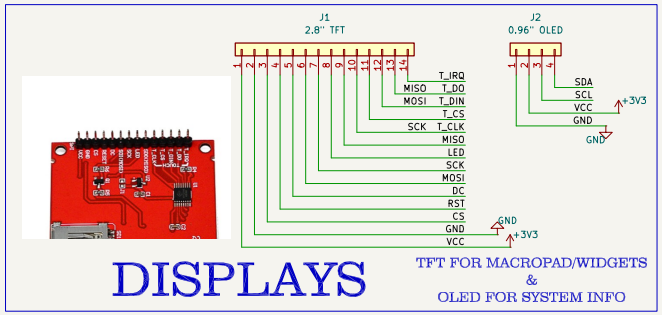

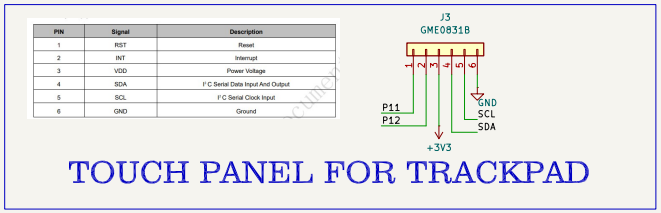

PIN	Signal	Description
1	RST	Reset
2	INT	Interrupt
3	VDD	Power Voltage
4	SDA	I²C Serial Data Input And Output
5	SCL	I²C Serial Clock Input
6	GND	Ground

CIPHER by ARYAN-GIT-BYTE

Sheet: /Navigation Board/
File: Navigation-Board.kicad_sch

Title:

Size: A3	Date:	Rev:
KiCad E.D.A. 9.0.7		Id: 6/9

Sheet: /Instrument board/
File: Instrument.kicad_sch

Title:

Size: A4	Date:	**Rev:**
KiCad E.D.A. 9.0.7		Id: 7/9

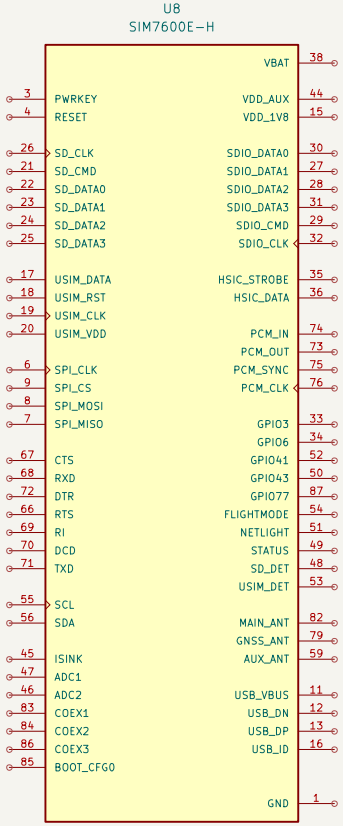

Sheet: /Radio Board/
File: Radio-Board.kicad_sch

Title:

Size: A4	Date:	**Rev:**
KiCad E.D.A. 9.0.7		Id: 8/9

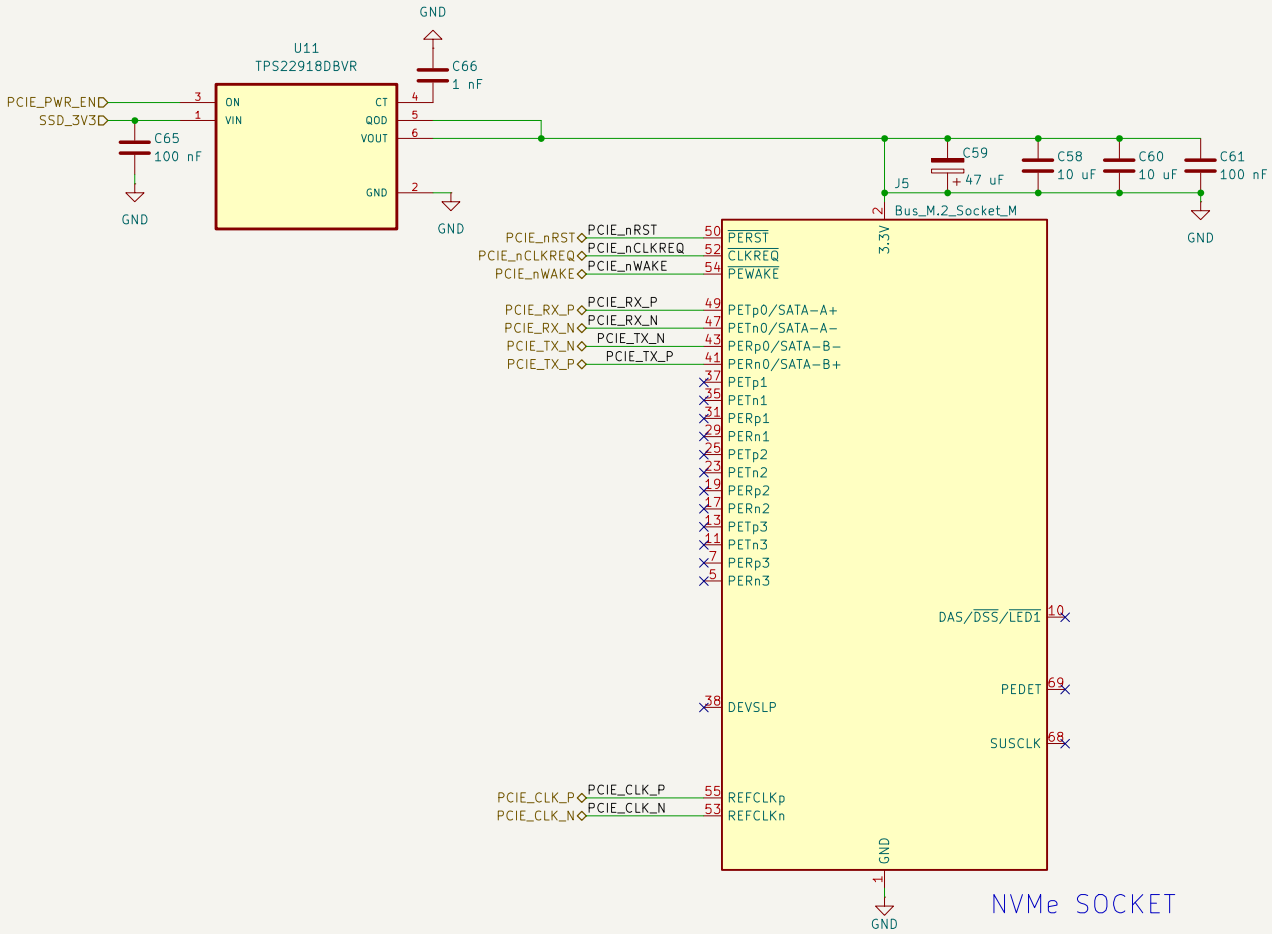

Sheet: /Main-Board/Ports/NVMe Socket/
File: nvme-socket.kicad_sch

Title:

Size: A4	Date:	Rev:
KiCad E.D.A. 9.0.7		Id: 9/9

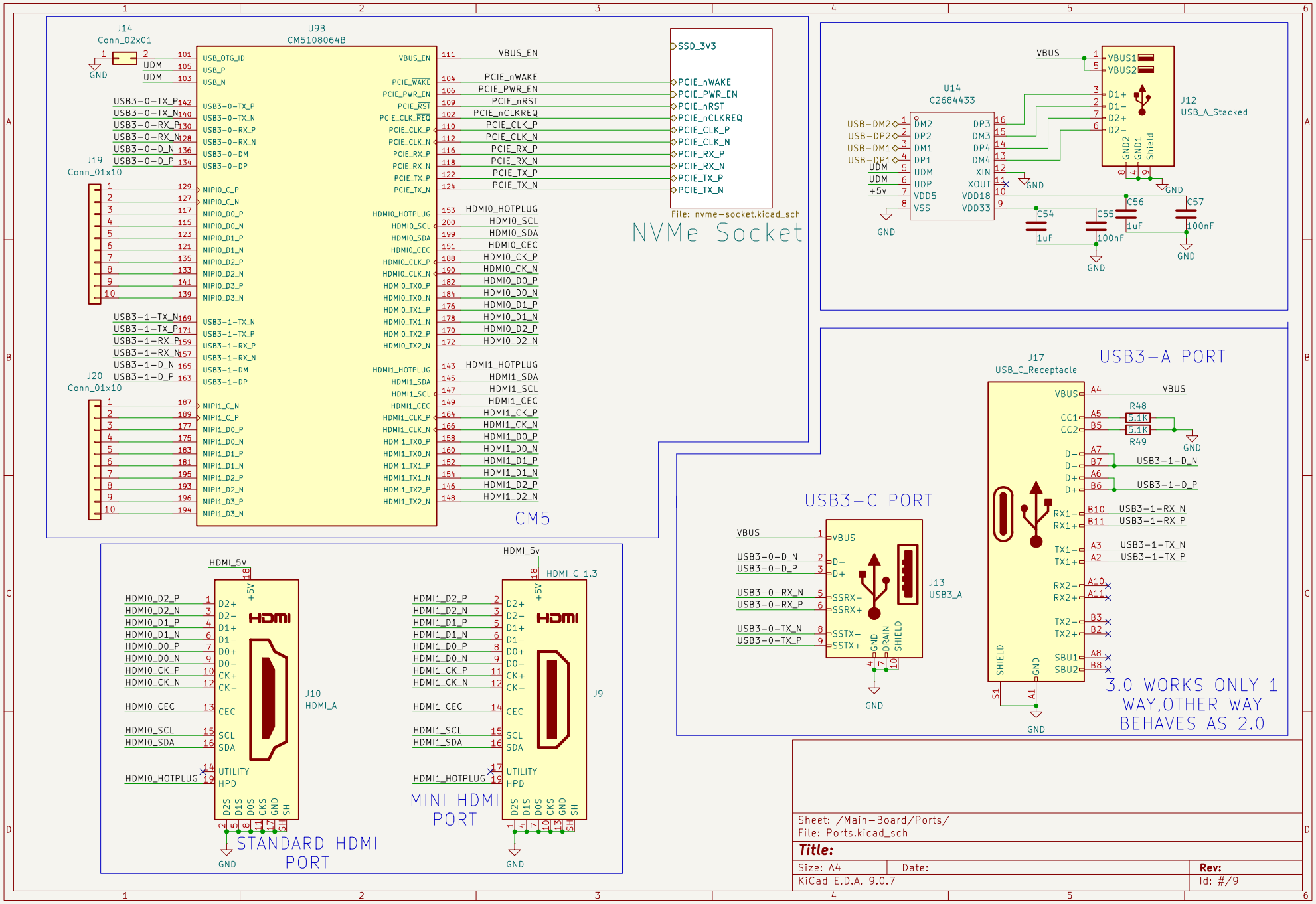
J14
Conn_02x01
GND
UDM
UDM
U9B
CM5108064B
USB3-0-TX_P
USB3-0-TX_N
USB3-0-RX_P
USB3-0-RX_N
USB3-0-D_N
USB3-0-D_P
J19
Conn_01x10
USB3-1-TX_N
USB3-1-TX_P
USB3-1-RX_P
USB3-1-RX_N
USB3-1-D_N
USB3-1-D_P
J20
Conn_01x10
VBUS_EN
PCIE_nWAKE
PCIE_PWR_EN
PCIE_nRST
PCIE_nCLKREQ
PCIE_CLK_P
PCIE_CLK_N
PCIE_RX_P
PCIE_RX_N
PCIE_TX_P
PCIE_TX_N
HDMI0_HOTPLUG
HDMI0_SCL
HDMI0_SDA
HDMI0_CEC
HDMI0_CK_P
HDMI0_CK_N
HDMI0_D0_P
HDMI0_D0_N
HDMI0_D1_P
HDMI0_D1_N
HDMI1_HOTPLUG
HDMI1_SDA
HDMI1_SCL
HDMI1_CEC
HDMI1_CK_P
HDMI1_CK_N
HDMI1_D0_P
HDMI1_D0_N
HDMI1_D1_P
HDMI1_D1_N
HDMI1_D2_P
HDMI1_D2_N
SSD_3V3
File: nvme-socket.kicad_sch
NVMe Socket
CM5
U14
C2684433
USB-DM2
USB-DP2
USB-DM1
USB-DP1
UDM
UDM
+5v
GND
VBUS
J12
USB_A_Stacked
C54
1uF
C55
100nF
C56
1uF
C57
100nF
J17
USB_C_Receptacle
USB3-A PORT
R48
5.1K
R49
5.1K
USB3-1-D_N
USB3-1-D_P
USB3-1-RX_N
USB3-1-RX_P
USB3-1-TX_N
USB3-1-TX_P
3.0 WORKS ONLY 1 WAY,OTHER WAY BEHAVES AS 2.0
USB3-C PORT
J13
USB3_A
USB3-0-D_N
USB3-0-D_P
USB3-0-RX_N
USB3-0-RX_P
USB3-0-TX_N
USB3-0-TX_P
HDMI_5V
HDMI_C_1.3
J10
HDMI_A
J9
MINI HDMI PORT
STANDARD HDMI PORT
HDMI0_HOTPLUG
HDMI1_HOTPLUG
Sheet: /Main-Board/Ports/
File: Ports.kicad_sch
Title:
Size: A4
Date:
Rev:
KiCad E.D.A. 9.0.7
Id: #/9