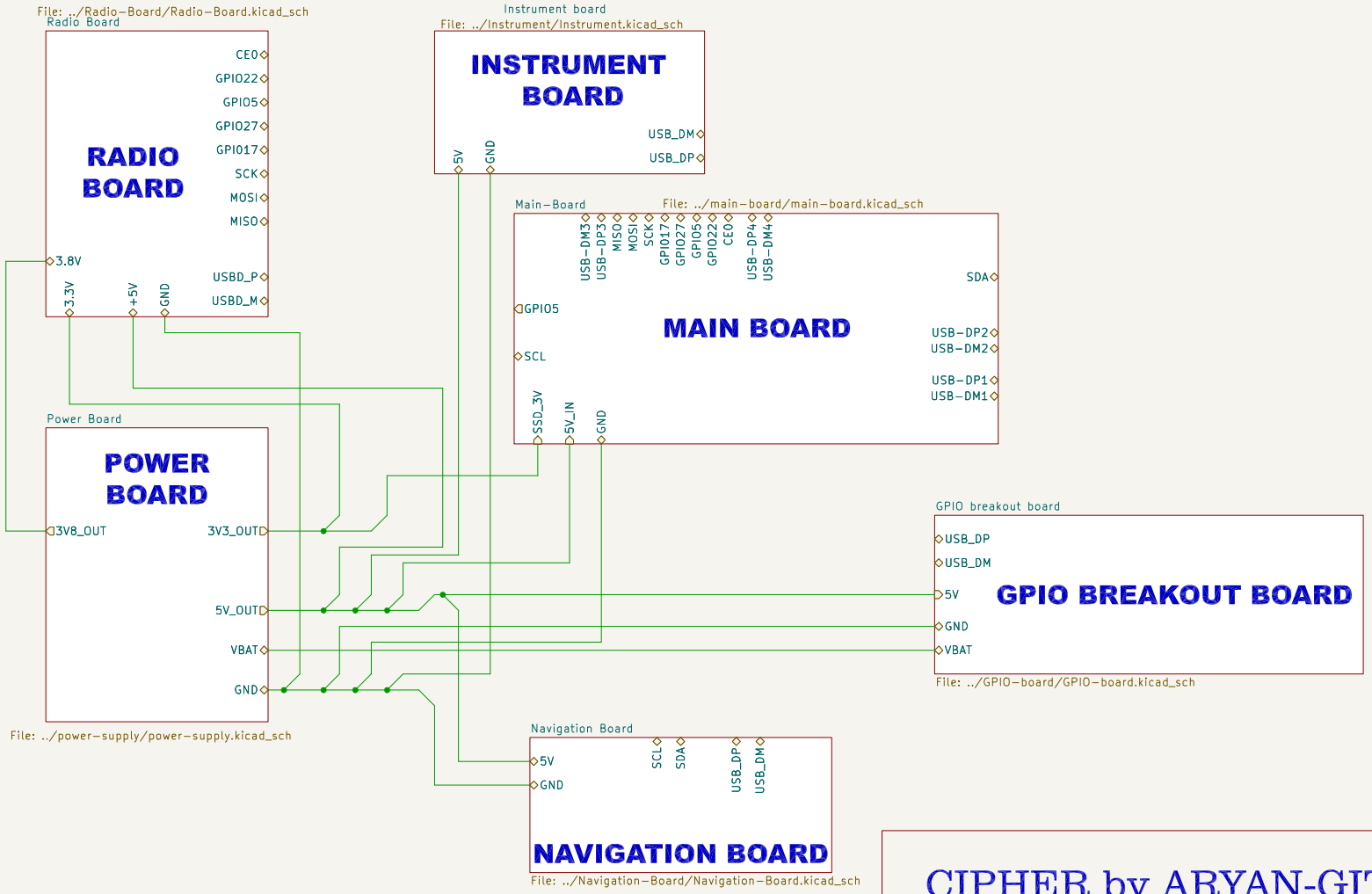

CIPHER by ARYAN-GIT-BYTE

Sheet: /
File: OVERALL.kicad_sch

Title:

Size: A4	Date:	Rev:
KiCad E.D.A. 9.0.7		Id: 1/10

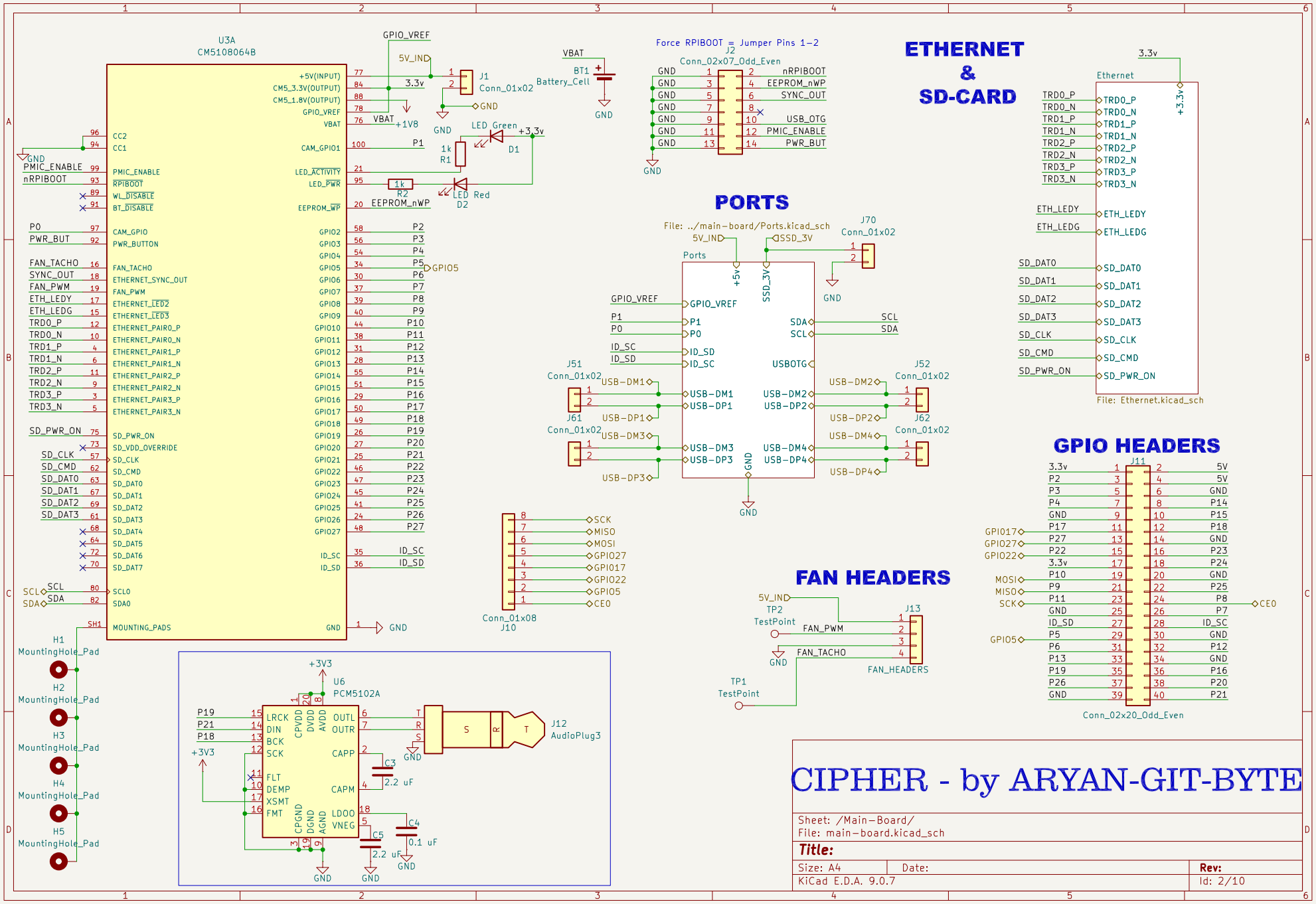
U3A
CM5108064B
ETHERNET & SD-CARD
Ethernet
File: Ethernet.kicad_sch
Force RPIBOOT = Jumper Pins 1-2
J2
Conn_02x07_Odd_Even
PORTS
File: ../main-board/Ports.kicad_sch
Ports
J70
Conn_01x02
J51
Conn_01x02
J61
J52
J62
J10
Conn_01x08
GPIO HEADERS
J11
Conn_02x20_Odd_Even
FAN HEADERS
J13
FAN_HEADERS
TP1
TP2
TestPoint
BT1
Battery_Cell
J1
Conn_01x02
D1
D2
R1
R2
H1
H2
H3
H4
H5
MountingHole_Pad
U6
PCM5102A
J12
AudioPlug3
C3
C4
C5
2.2 uF
0.1 uF
CIPHER - by ARYAN-GIT-BYTE
Sheet: /Main-Board/
File: main-board.kicad_sch
Title:
Size: A4
Date:
Rev:
KiCad E.D.A. 9.0.7
Id: 2/10

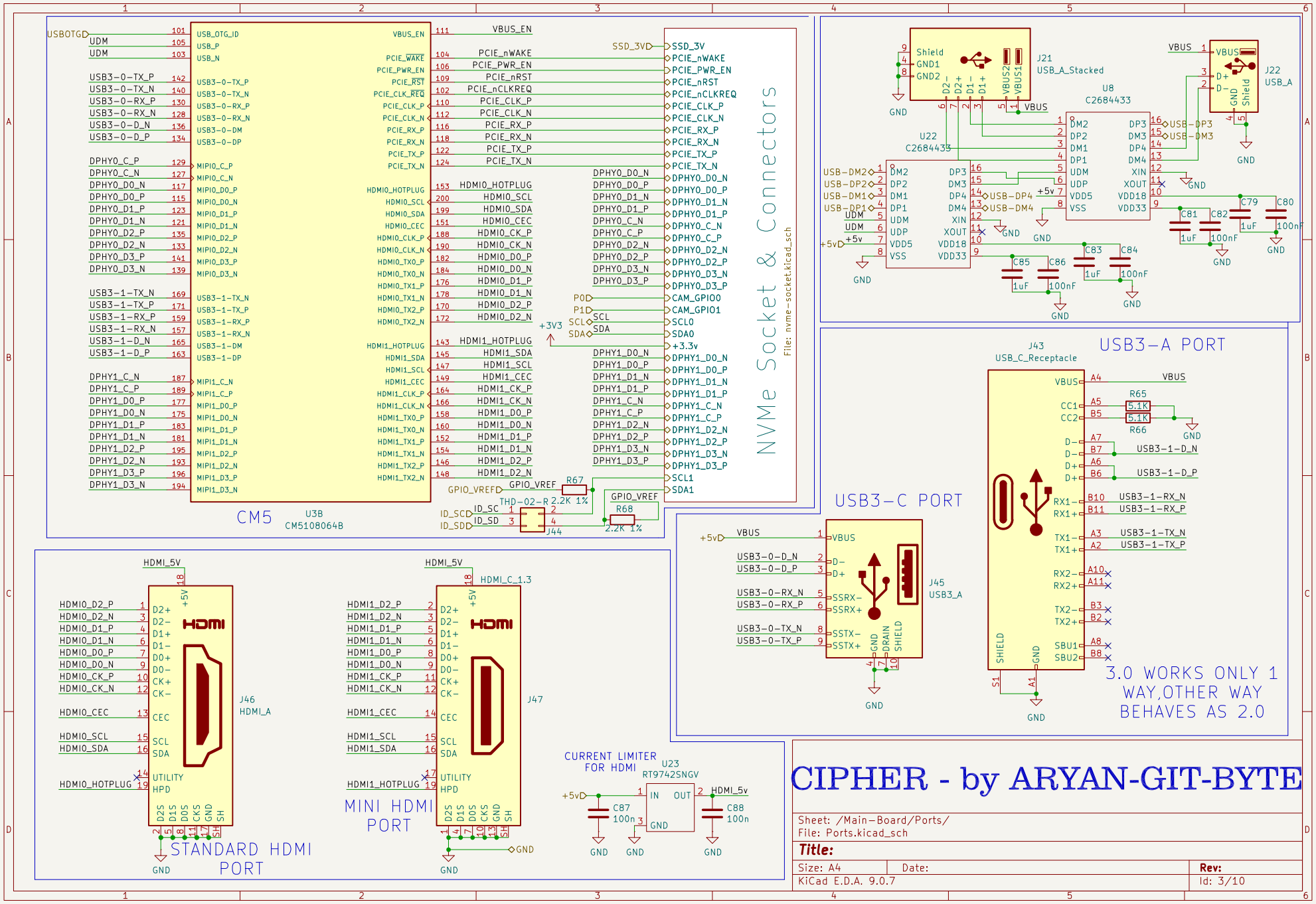
CM5
U3B
CM5108064B
NVMe Socket & Connectors
File: nvme-socket.kicad_sch
J21
USB_A_Stacked
J22
USB_A
U8
C2684433
U22
C2684433
USB3-A PORT
J43
USB_C_Receptacle
3.0 WORKS ONLY 1 WAY,OTHER WAY BEHAVES AS 2.0
USB3-C PORT
J45
USB3_A
J44
THD-02-R
J46
HDMI_A
STANDARD HDMI PORT
J47
HDMI_C_1.3
MINI HDMI PORT
CURRENT LIMITER FOR HDMI
U23
RT9742SNGV
CIPHER - by ARYAN-GIT-BYTE
Sheet: /Main-Board/Ports/
File: Ports.kicad_sch
Title:
Size: A4
Date:
Rev:
KiCad E.D.A. 9.0.7
Id: 3/10

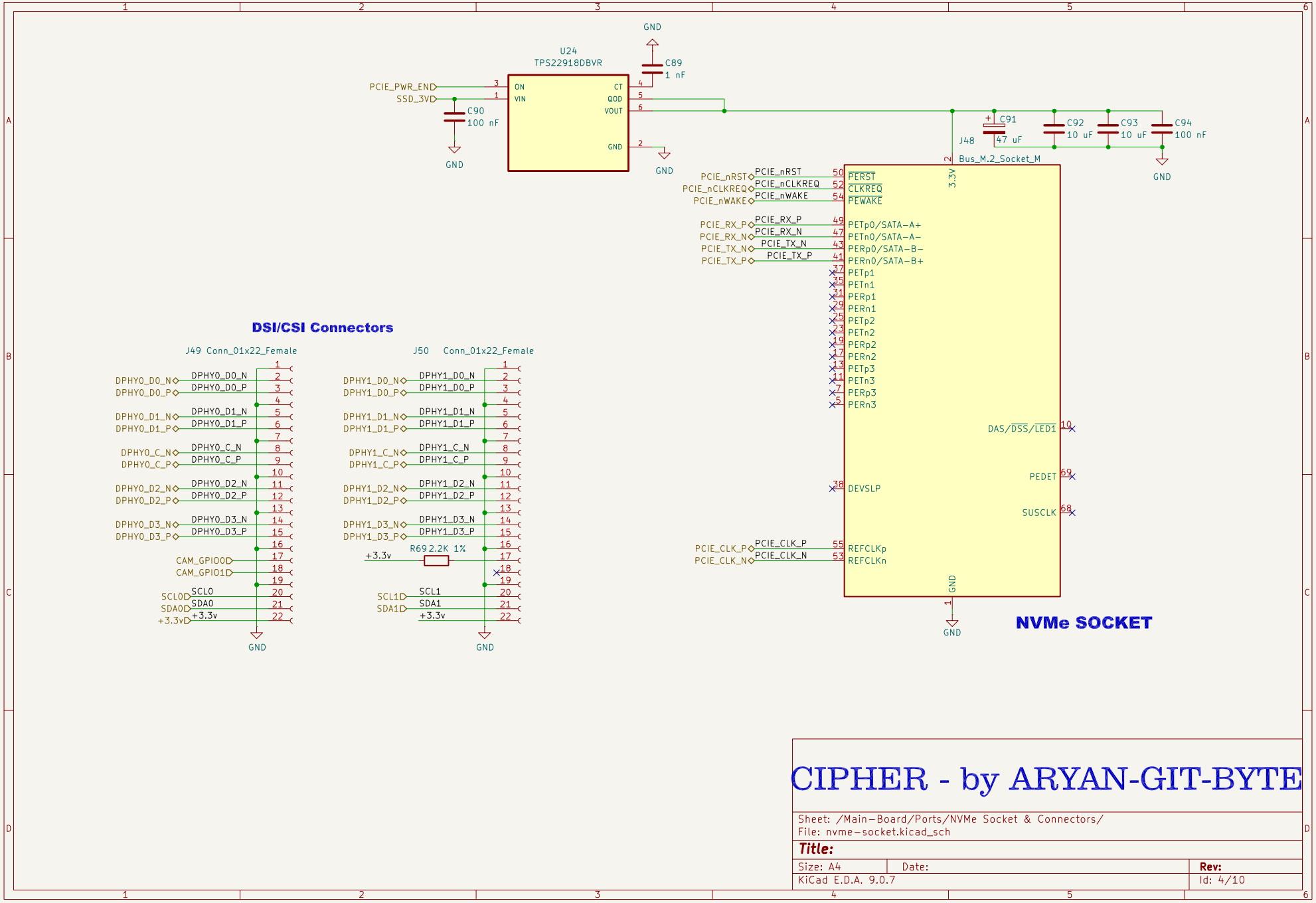

CIPHER - by ARYAN-GIT-BYTE

Sheet: /Main-Board/Ports/NVMe Socket & Connectors/
File: nvme-socket.kicad_sch

Title:

Size: A4	Date:	Rev:
KiCad E.D.A. 9.0.7		Id: 4/10

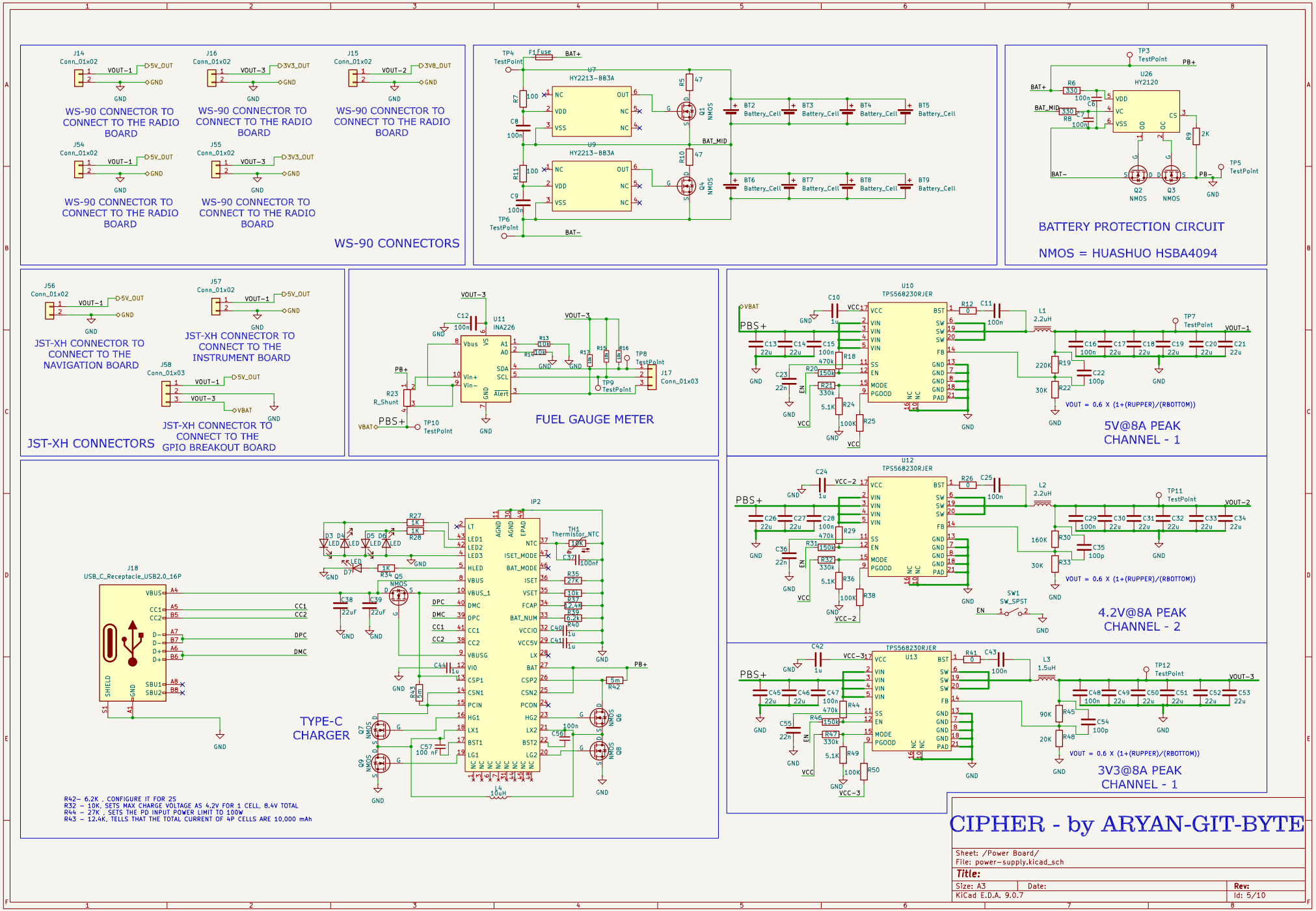
WS-90 CONNECTOR TO CONNECT TO THE RADIO BOARD
WS-90 CONNECTOR TO CONNECT TO THE RADIO BOARD
WS-90 CONNECTOR TO CONNECT TO THE RADIO BOARD
WS-90 CONNECTOR TO CONNECT TO THE RADIO BOARD
WS-90 CONNECTOR TO CONNECT TO THE RADIO BOARD
WS-90 CONNECTORS
BATTERY PROTECTION CIRCUIT
NMOS = HUASHUO HSBA4094
JST-XH CONNECTOR TO CONNECT TO THE NAVIGATION BOARD
JST-XH CONNECTOR TO CONNECT TO THE INSTRUMENT BOARD
JST-XH CONNECTOR TO CONNECT TO THE GPIO BREAKOUT BOARD
JST-XH CONNECTORS
FUEL GAUGE METER
5V@8A PEAK CHANNEL - 1
4.2V@8A PEAK CHANNEL - 2
3V3@8A PEAK CHANNEL - 1
TYPE-C CHARGER
R42– 6.2K , CONFIGURE IT FOR 2S
R32 – 10K, SETS MAX CHARGE VOLTAGE AS 4.2V FOR 1 CELL, 8.4V TOTAL
R44 – 27K , SETS THE PD INPUT POWER LIMIT TO 100W
R43 – 12.4K, TELLS THAT THE TOTAL CURRENT OF 4P CELLS ARE 10,000 mAh
CIPHER - by ARYAN-GIT-BYTE
Sheet: /Power Board/
File: power-supply.kicad_sch
Title:
Size: A3
Date:
Rev:
KiCad E.D.A. 9.0.7
Id: 5/10

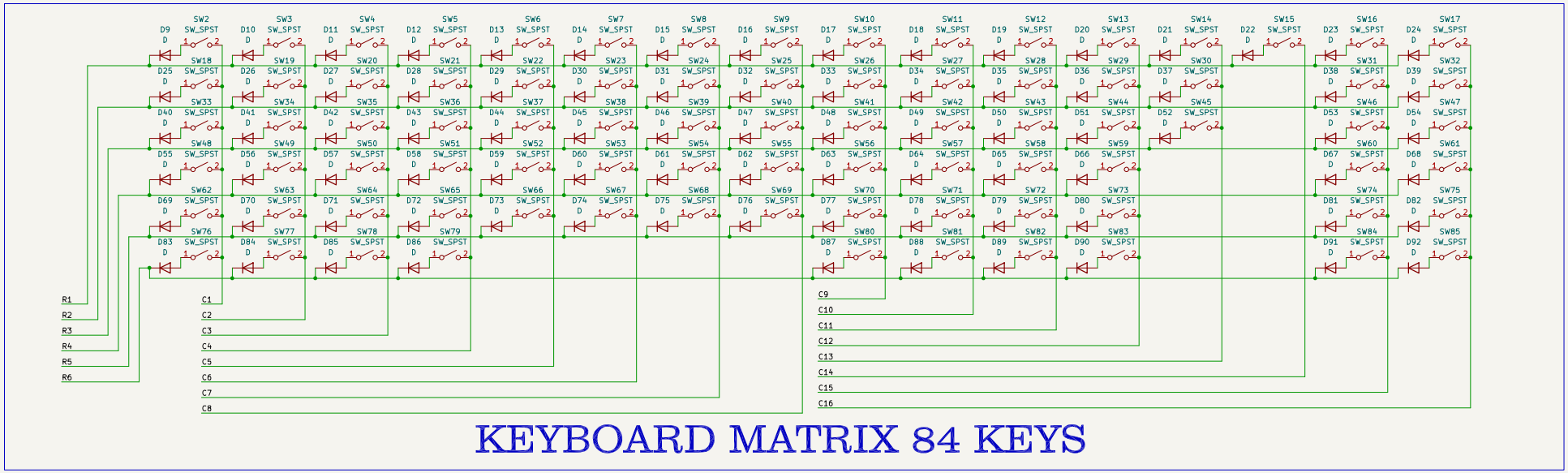

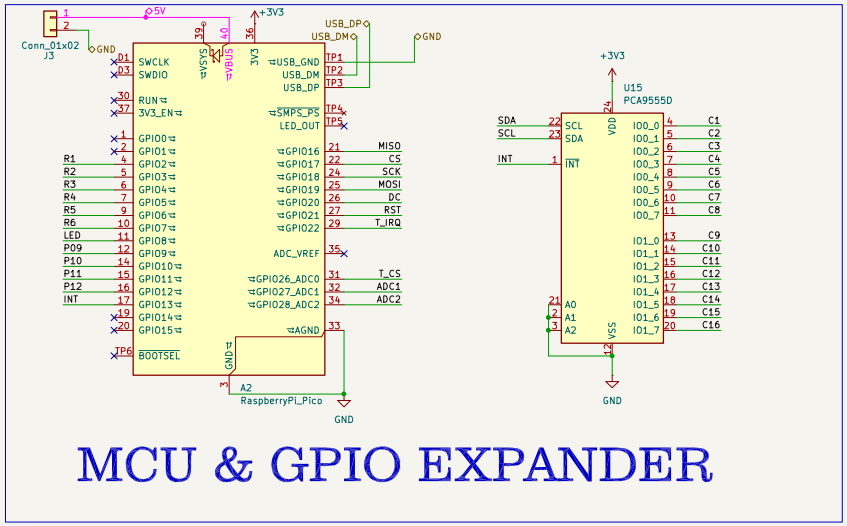

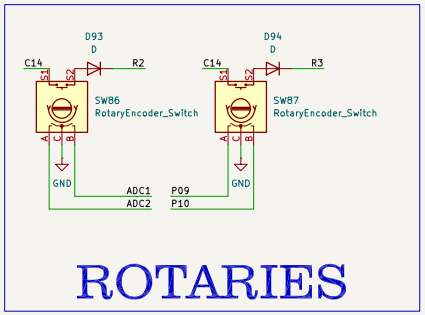

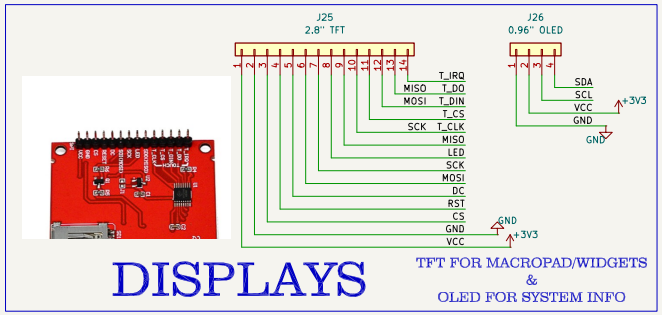

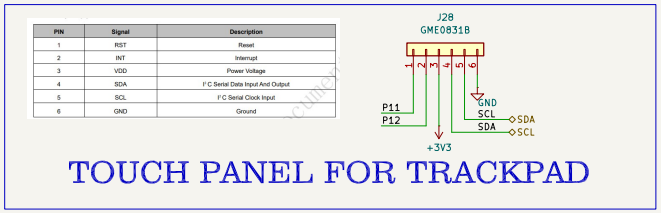

PIN	Signal	Description
1	RST	Reset
2	INT	Interrupt
3	VDD	Power Voltage
4	SDA	I²C Serial Data Input And Output
5	SCL	I²C Serial Clock Input
6	GND	Ground

CIPHER by ARYAN-GIT-BYTE

Sheet: /Navigation Board/
File: Navigation-Board.kicad_sch

Title:

Size: A3	Date:	Rev:
KiCad E.D.A. 9.0.7		Id: 6/10

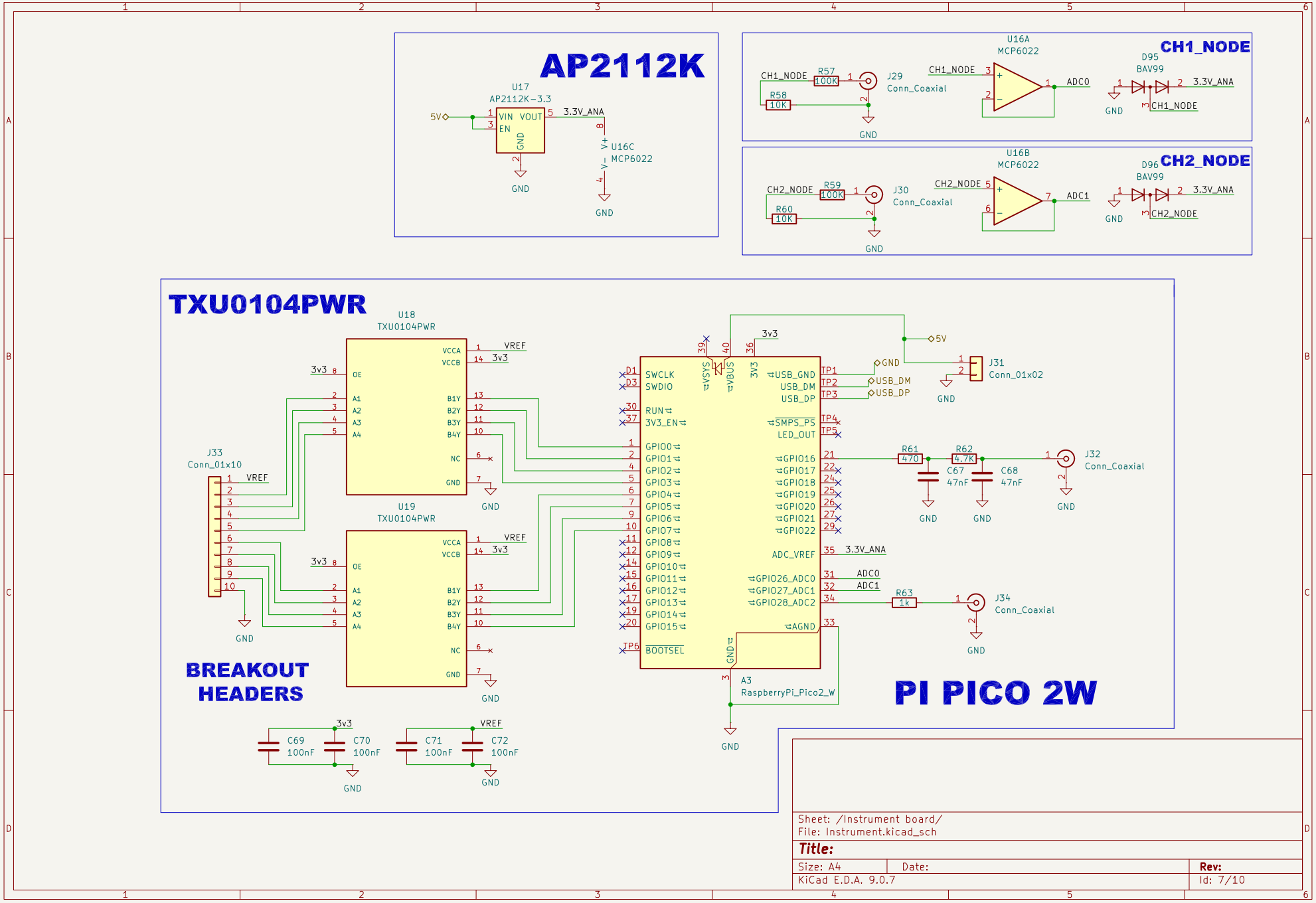

Sheet: /Instrument board/
File: Instrument.kicad_sch

Title:

Size: A4	Date:	Rev:
KiCad E.D.A. 9.0.7		Id: 7/10

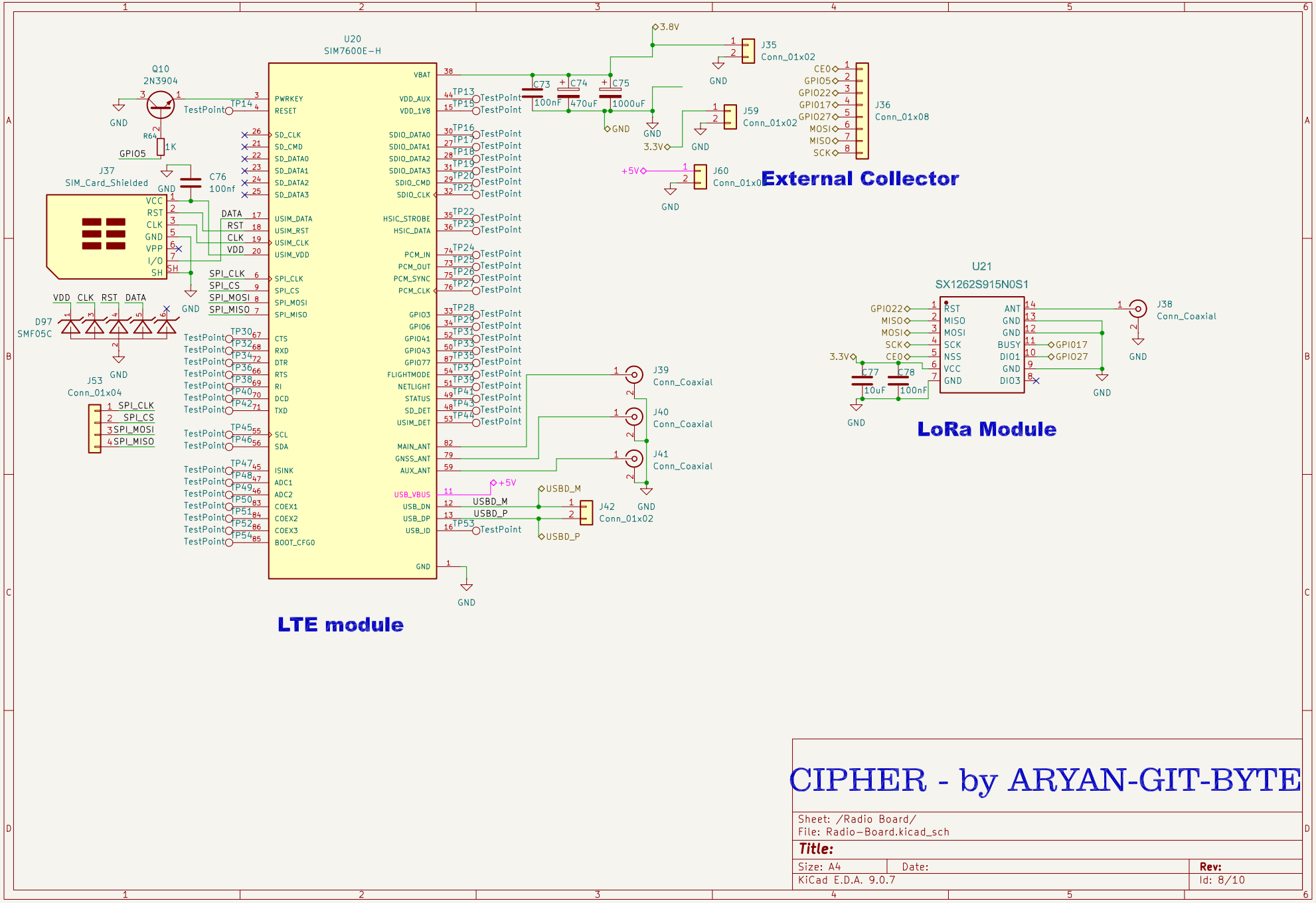

CIPHER - by ARYAN-GIT-BYTE

Sheet: /Radio Board/
File: Radio-Board.kicad_sch

Title:

Size: A4	Date:	**Rev:**
KiCad E.D.A. 9.0.7		Id: 8/10

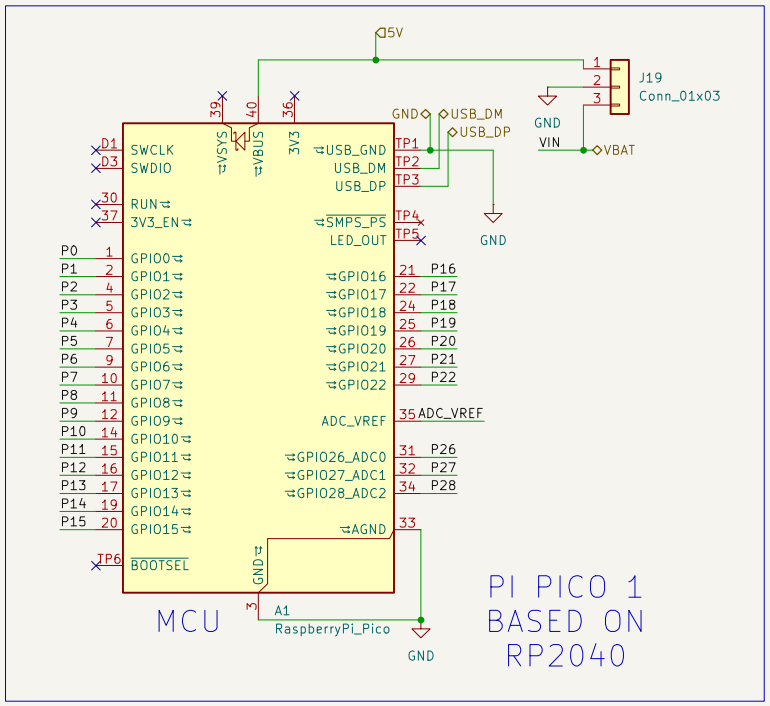

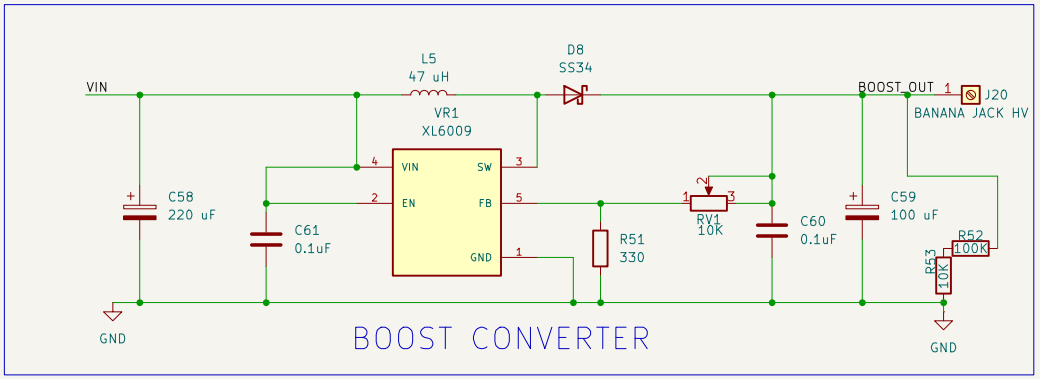

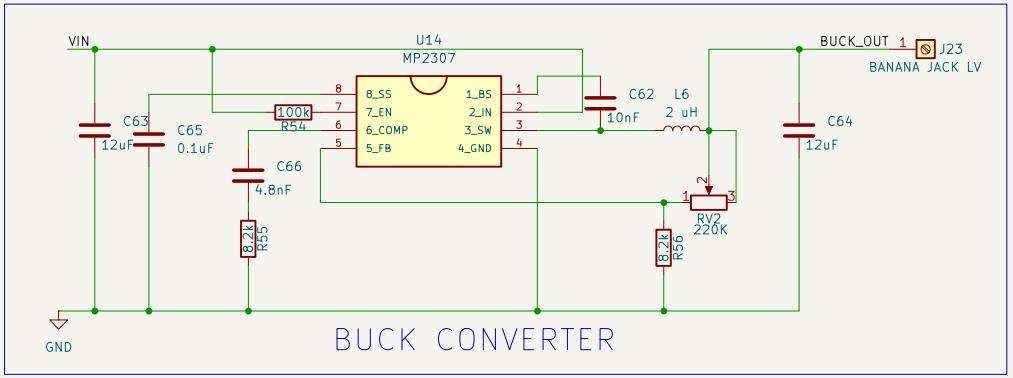

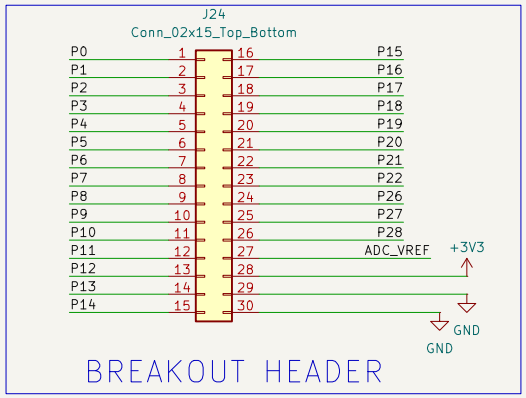

CIPHER - by ARYAN-GIT-BYTE

Sheet: /GPIO breakout board/
File: GPIO-board.kicad_sch

Title:

Size: A4	Date:	**Rev:**
KiCad E.D.A. 9.0.7		Id: 9/10

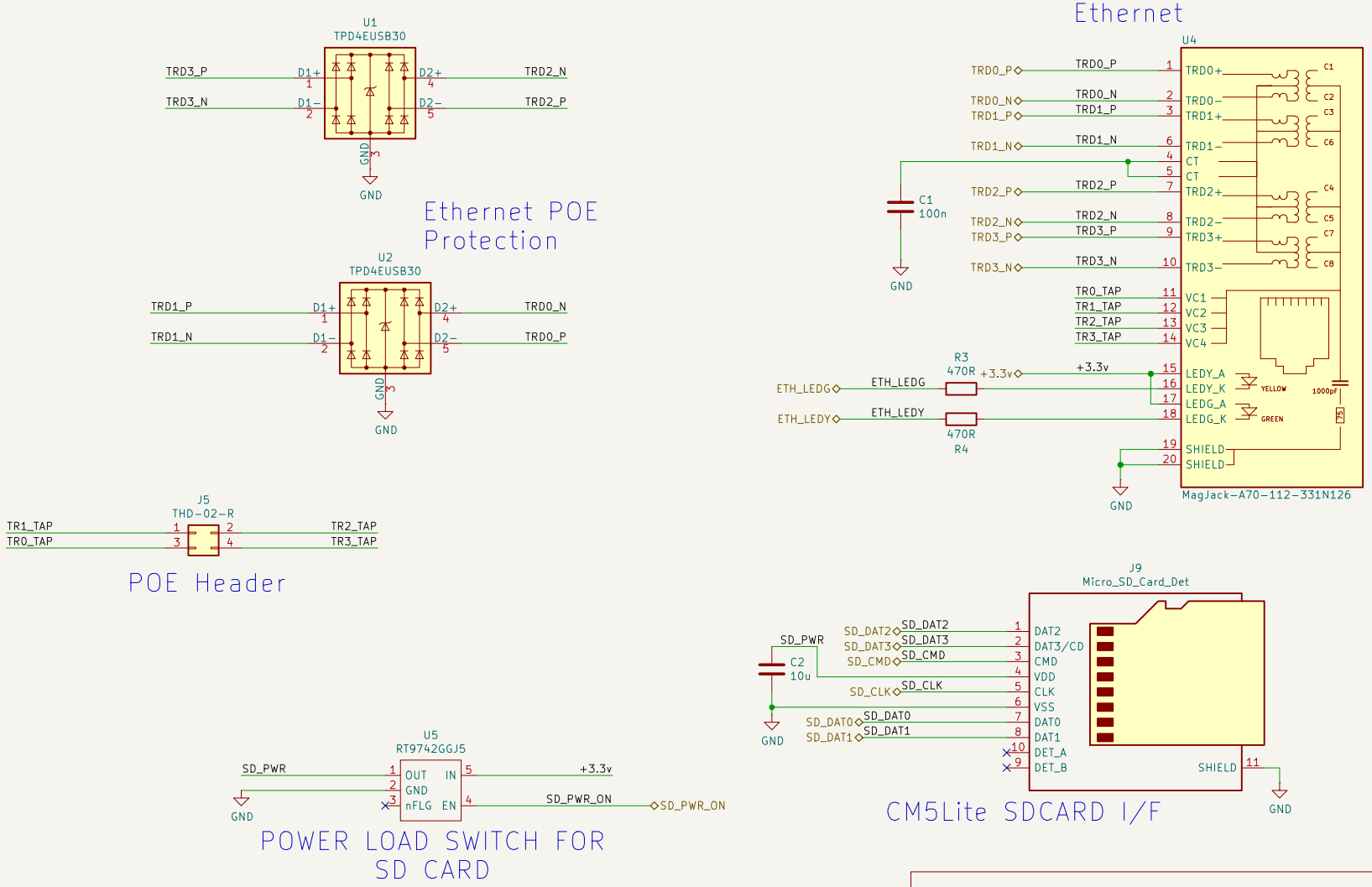

Sheet: /Main-Board/Ethernet/
File: Ethernet.kicad_sch

Title:

Size: A4	Date:	**Rev:**
KiCad E.D.A. 9.0.7		Id: 10/10