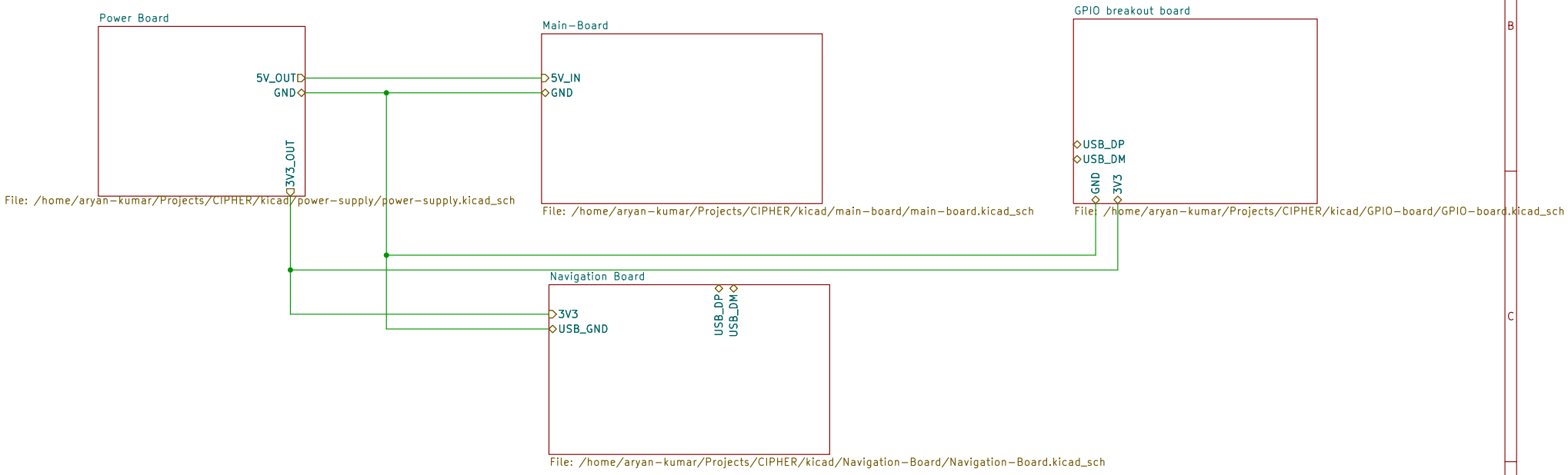

Sheet: /
File: OVERALL.kicad_sch

Title:

Size: A4	Date:	**Rev:**
KiCad E.D.A. 9.0.7		Id: 1/6

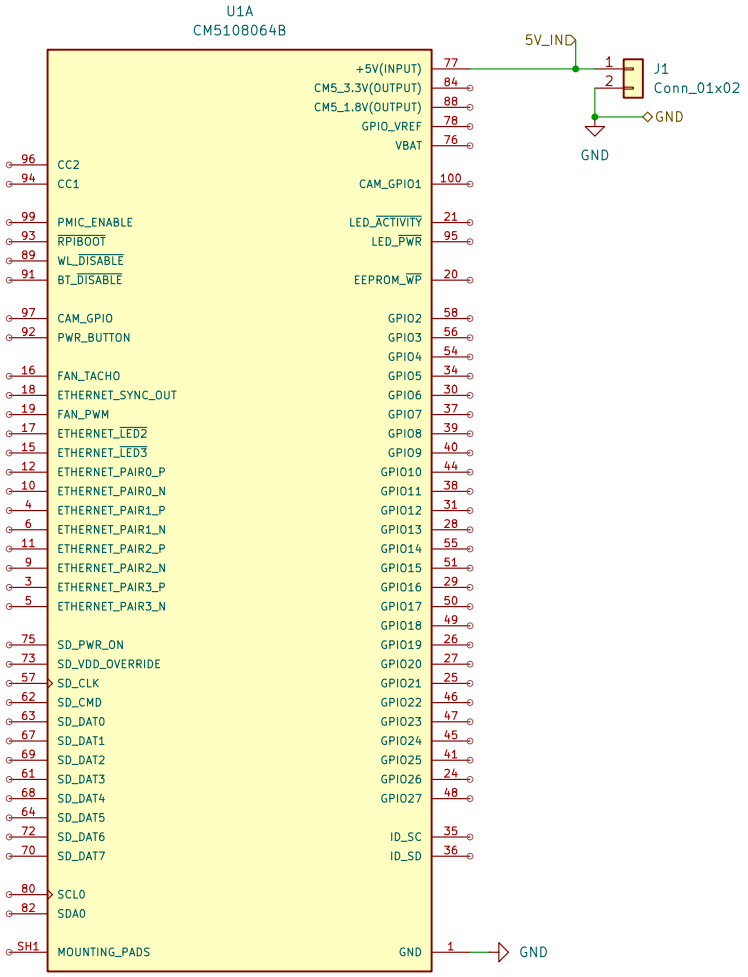

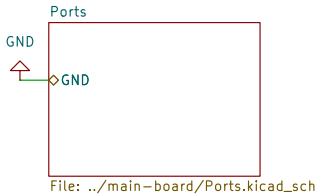

Sheet: /Main-Board/
File: main-board.kicad_sch

Title:

Size: A4	Date:	**Rev:**
KiCad E.D.A. 9.0.7		Id: 2/6

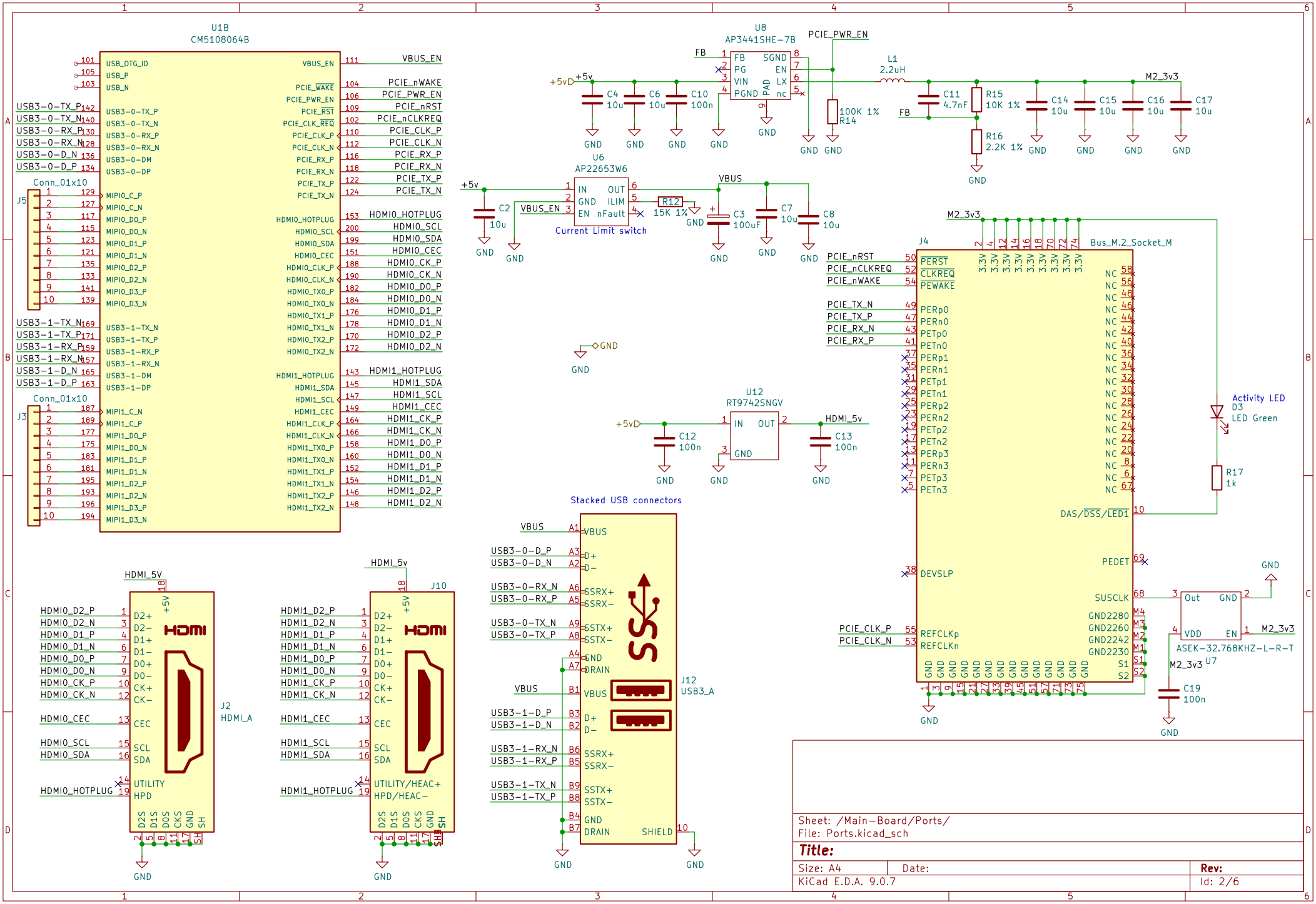
U1B
CM5108064B
U8
AP3441SHE-7B
U6
AP22653W6
Current Limit switch
U12
RT9742SNGV
J4
Bus_M.2_Socket_M
Activity LED
D3
LED Green
Stacked USB connectors
J12
USB3_A
J2
HDMI_A
J10
Conn_01x10
J5
J3
U7
ASEK-32.768KHZ-L-R-T
Sheet: /Main-Board/Ports/
File: Ports.kicad_sch
Title:
Size: A4
Date:
Rev:
KiCad E.D.A. 9.0.7
Id: 2/6

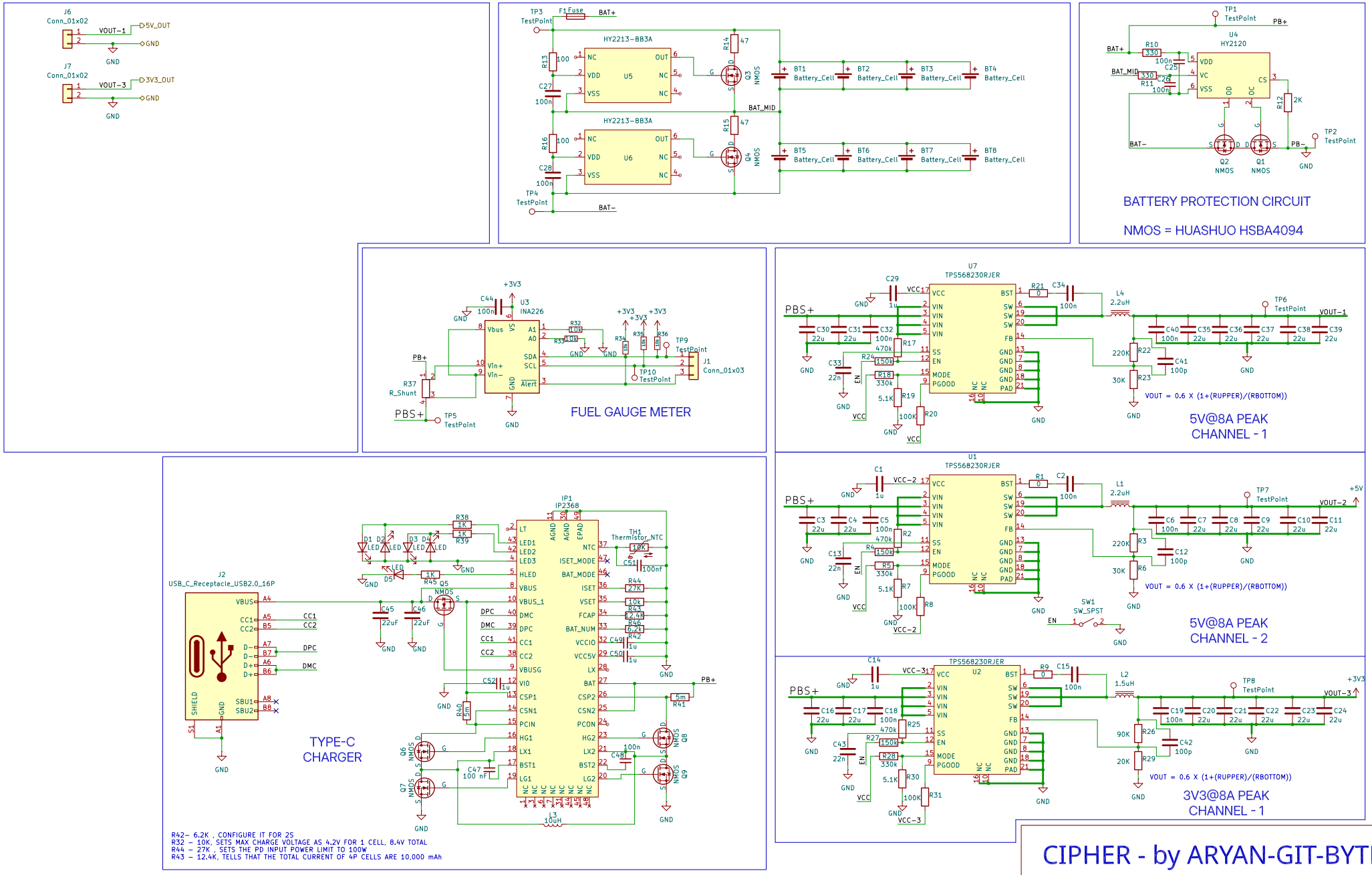

CIPHER - by ARYAN-GIT-BYTE

Sheet: /Power Board/
File: power-supply.kicad_sch

Title:

Size: A3	Date:	Rev:
KiCad E.D.A. 9.0.7		Id: 4/6

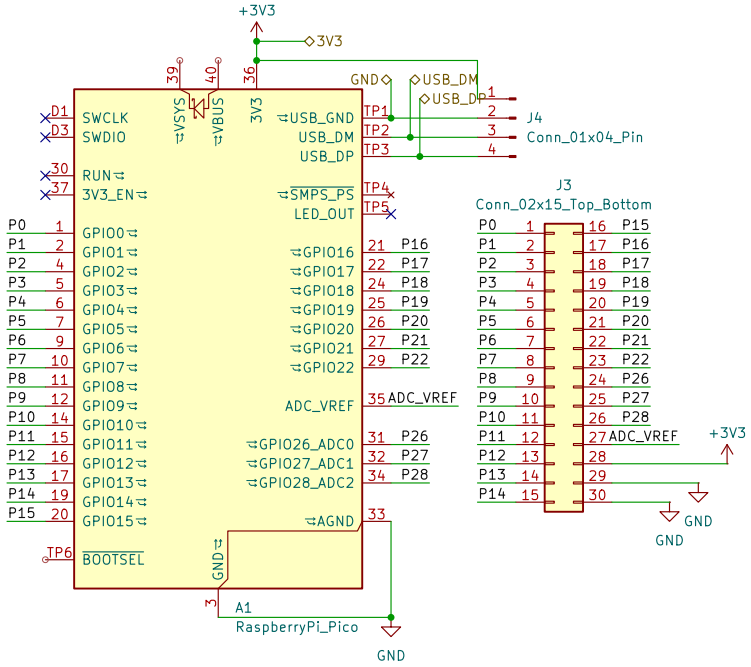

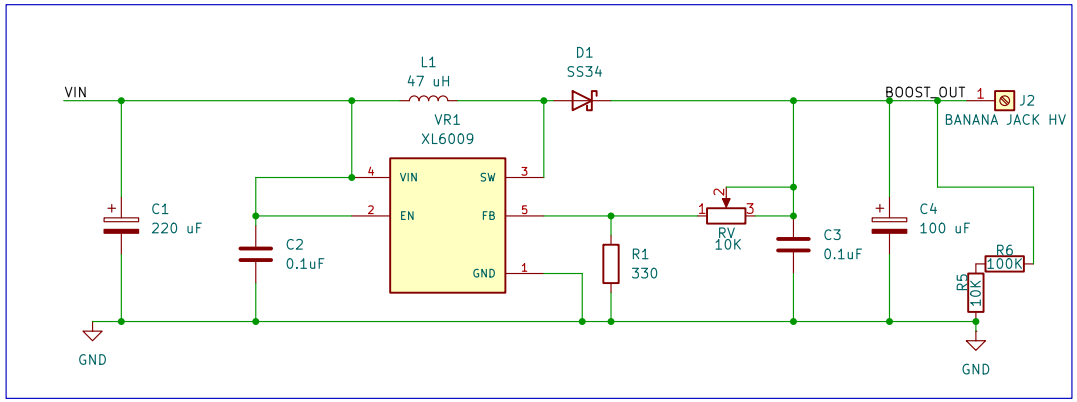

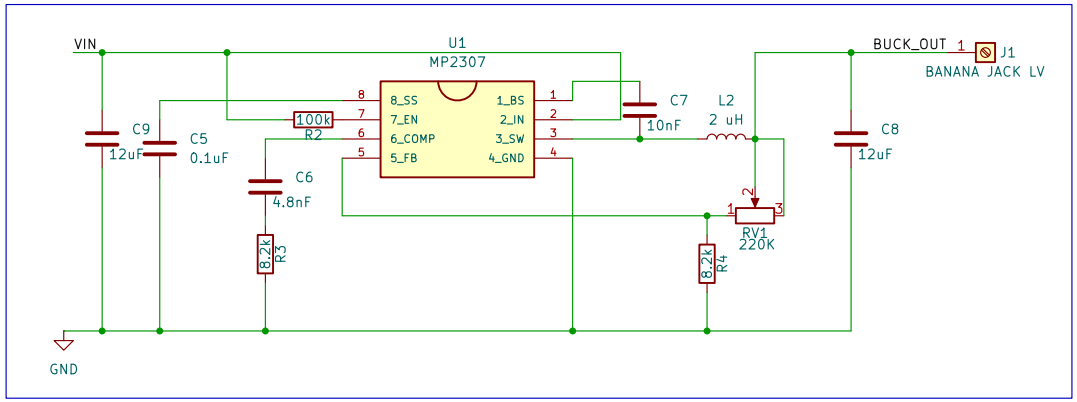

Sheet: /GPIO breakout board/
File: GPIO-board.kicad_sch

Title:

Size: A4	Date:	Rev:
KiCad E.D.A. 9.0.7		Id: 5/6

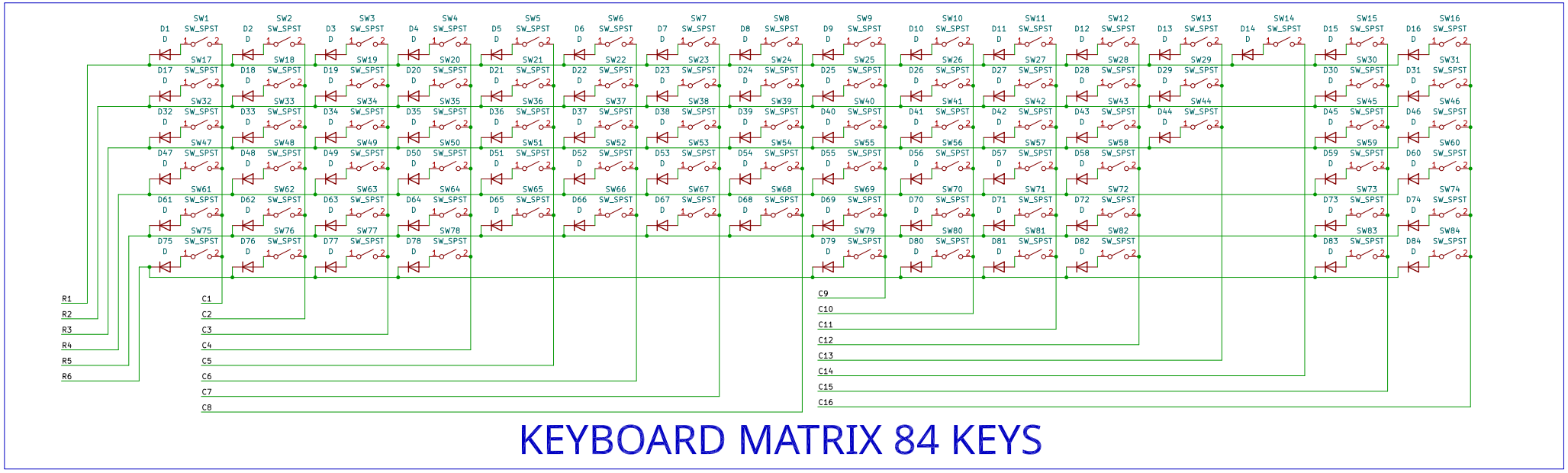

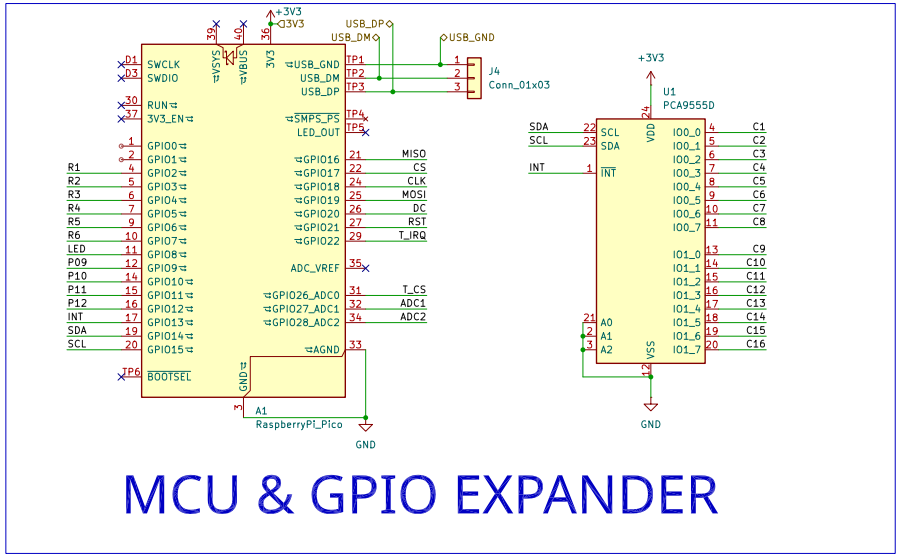

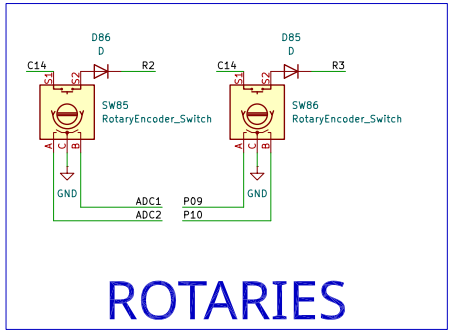

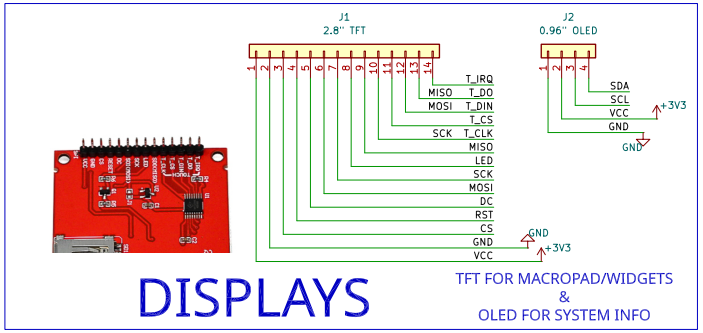

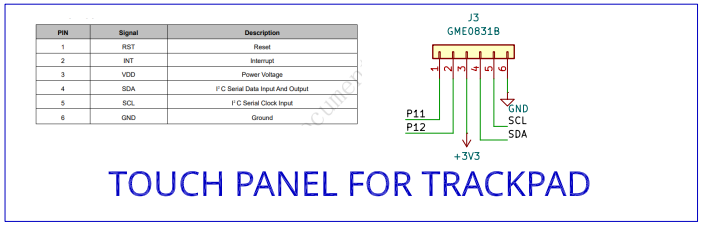

PIN	Signal	Description
1	RST	Reset
2	INT	Interrupt
3	VDD	Power Voltage
4	SDA	I²C Serial Data Input And Output
5	SCL	I²C Serial Clock Input
6	GND	Ground

CIPHER by ARYAN-GIT-BYTE

Sheet: /Navigation Board/
File: Navigation-Board.kicad_sch

Title:

Size: A3 | Date: | **Rev:**
KiCad E.D.A. 9.0.7 | Id: 6/6