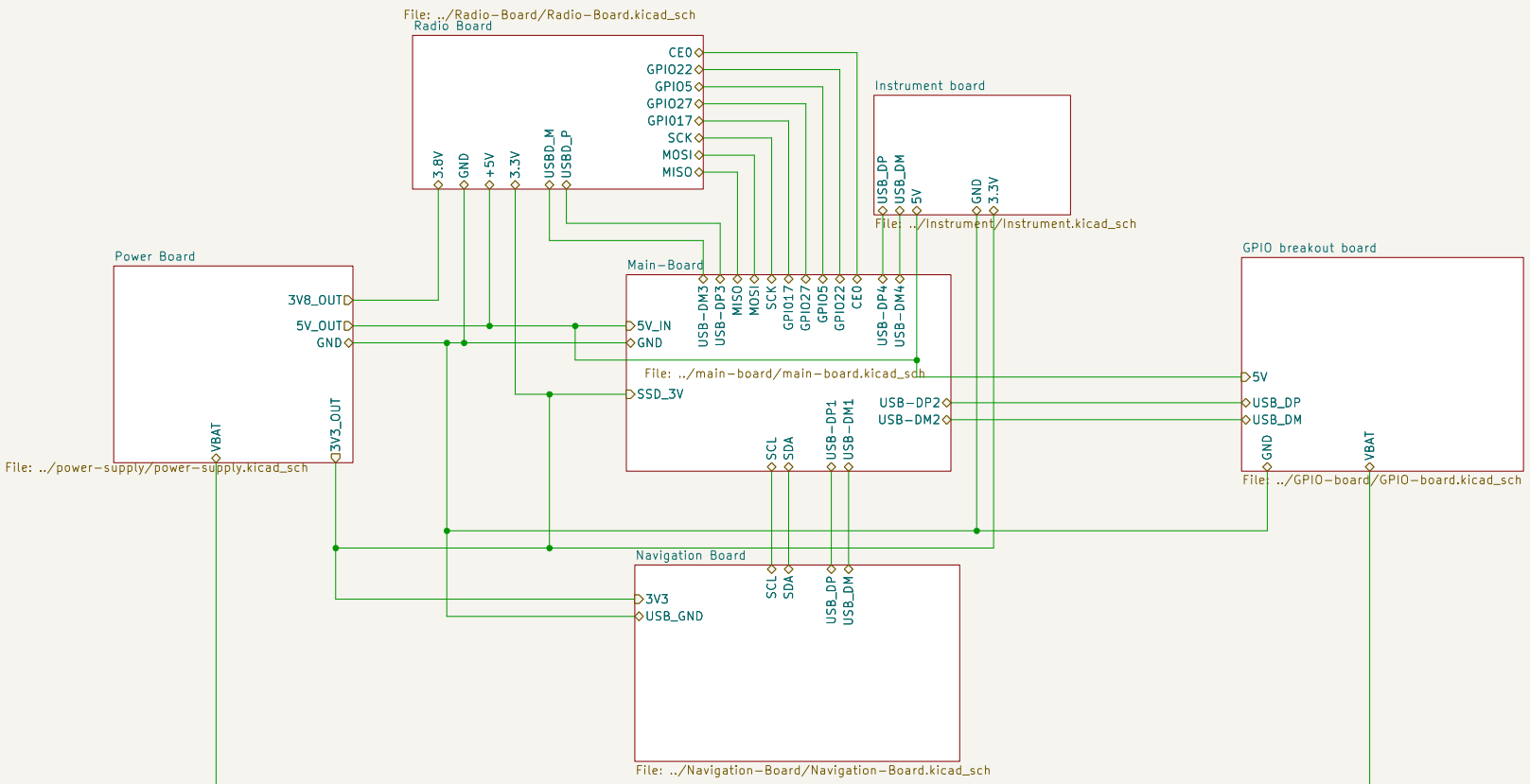

CIPHER by ARYAN-GIT-BYTE

Sheet: /
File: OVERALL.kicad_sch

Title:

Size: A4	Date:	**Rev:**
KiCad E.D.A. 9.0.7		Id: 1/9

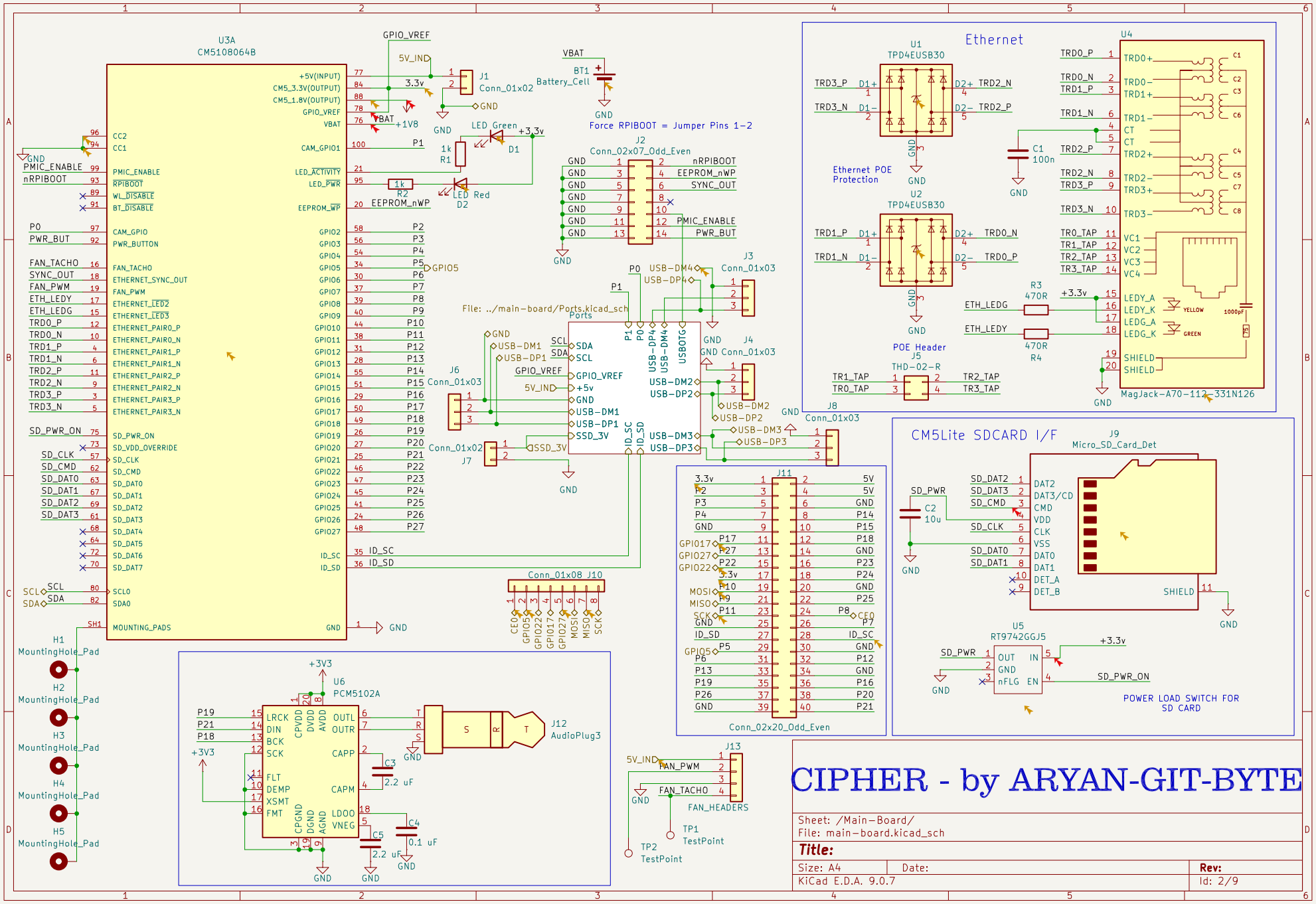
U3A
CM5108064B
Ethernet
U1
TPD4EUSB30
U2
TPD4EUSB30
U4
MagJack-A70-112-331N126
Ethernet POE Protection
POE Header
J5
THD-02-R
J8
Conn_01x03
CM5Lite SDCARD I/F
J9
Micro_SD_Card_Det
U5
RT9742GGJ5
POWER LOAD SWITCH FOR SD CARD
Force RPIBOOT = Jumper Pins 1-2
Battery_Cell
BT1
J1
Conn_01x02
J2
Conn_02x07_Odd_Even
J3
Conn_01x03
J4
Conn_01x03
J6
Conn_01x03
J7
Conn_01x02
File: ../main-board/Ports.kicad_sch
Ports
Conn_01x08 J10
J11
Conn_02x20_Odd_Even
U6
PCM5102A
J12
AudioPlug3
J13
FAN_HEADERS
TP1
TestPoint
TP2
TestPoint
H1
MountingHole_Pad
H2
MountingHole_Pad
H3
MountingHole_Pad
H4
MountingHole_Pad
H5
MountingHole_Pad
CIPHER - by ARYAN-GIT-BYTE
Sheet: /Main-Board/
File: main-board.kicad_sch
Title:
Size: A4
Date:
Rev:
KiCad E.D.A. 9.0.7
Id: 2/9

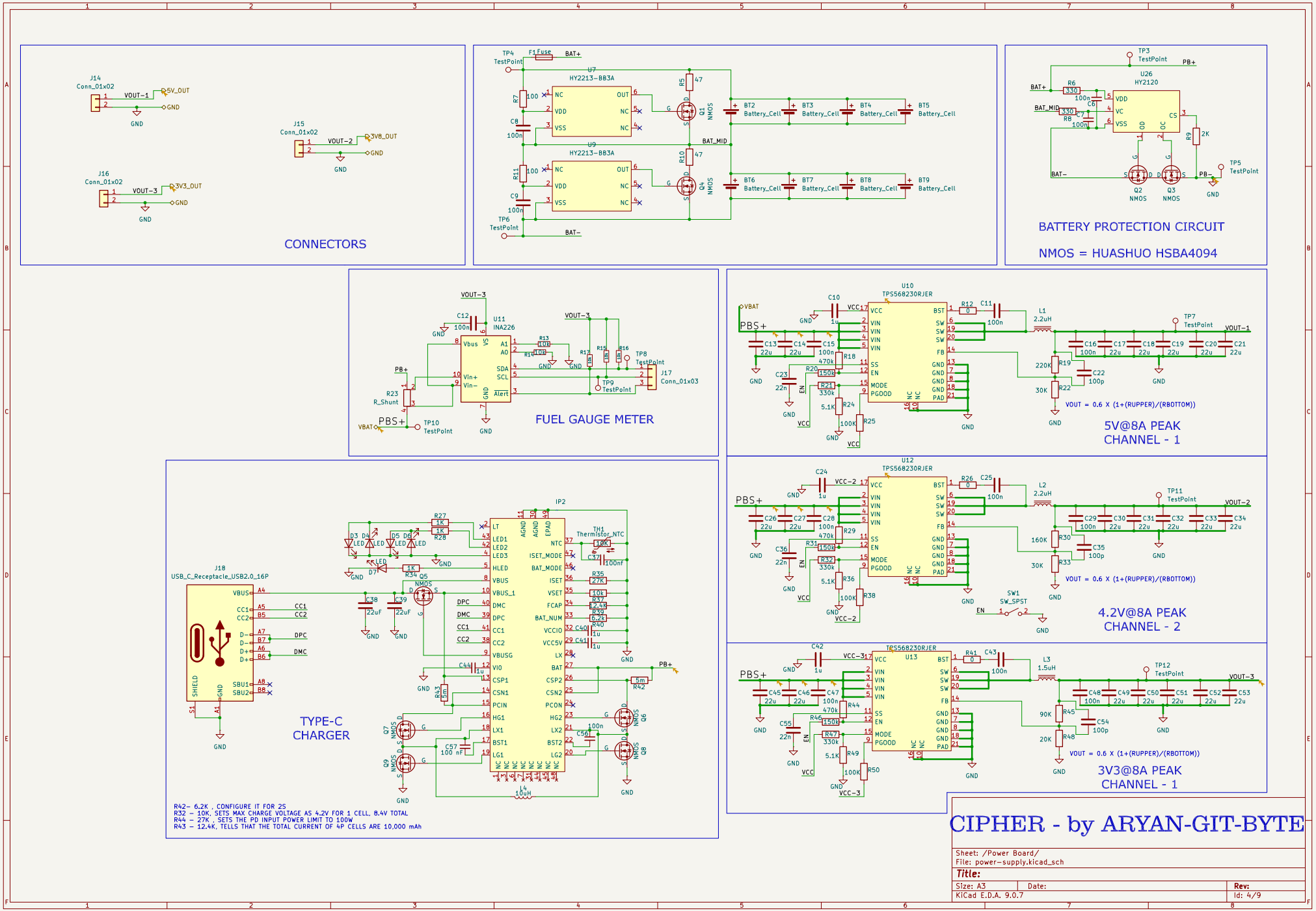
CONNECTORS
J14 Conn_01x02
J15 Conn_01x02
J16 Conn_01x02
VOUT-1
VOUT-2
VOUT-3
5V_OUT
3V8_OUT
3V3_OUT
GND
BATTERY PROTECTION CIRCUIT
NMOS = HUASHUO HSBA4094
U7 HY2213-BB3A
U9 HY2213-BB3A
U26 HY2120
BAT+
BAT-
BAT_MID
PB+
PB-
FUEL GAUGE METER
U11 INA226
R23 R_Shunt
PBS+
VBAT
J17 Conn_01x03
5V@8A PEAK
CHANNEL - 1
U10 TPS568230RJER
U12 TPS568230RJER
U13 TPS568230RJER
VOUT = 0.6 X (1+(RUPPER)/(RBOTTOM))
4.2V@8A PEAK
CHANNEL - 2
3V3@8A PEAK
CHANNEL - 1
TYPE-C
CHARGER
J18 USB_C_Receptacle_USB2.0_16P
IP2
R42- 6.2K , CONFIGURE IT FOR 2S
R32 - 10K, SETS MAX CHARGE VOLTAGE AS 4.2V FOR 1 CELL, 8.4V TOTAL
R44 - 27K , SETS THE PD INPUT POWER LIMIT TO 100W
R43 - 12.4K, TELLS THAT THE TOTAL CURRENT OF 4P CELLS ARE 10,000 mAh
CIPHER - by ARYAN-GIT-BYTE
Sheet: /Power Board/
File: power-supply.kicad_sch
Title:
Size: A3
Date:
Rev:
KiCad E.D.A. 9.0.7
Id: 4/9

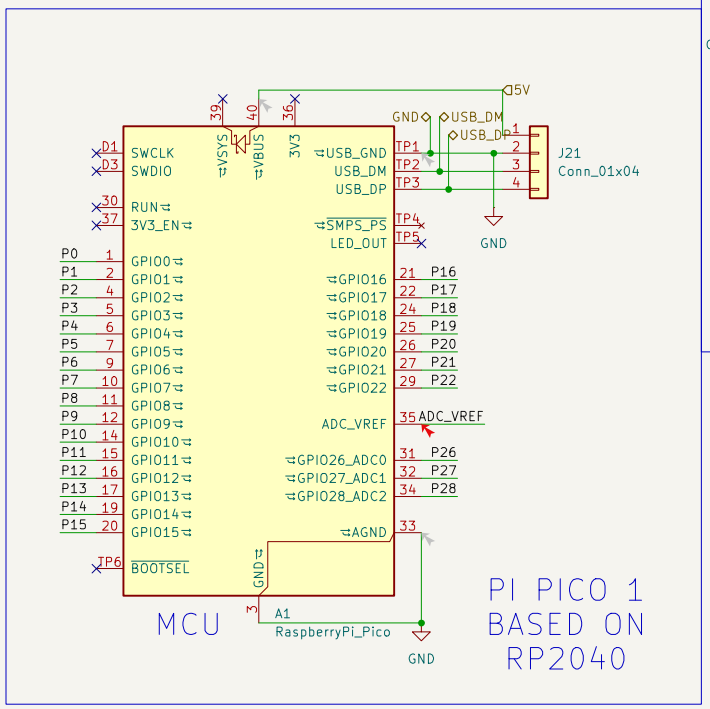

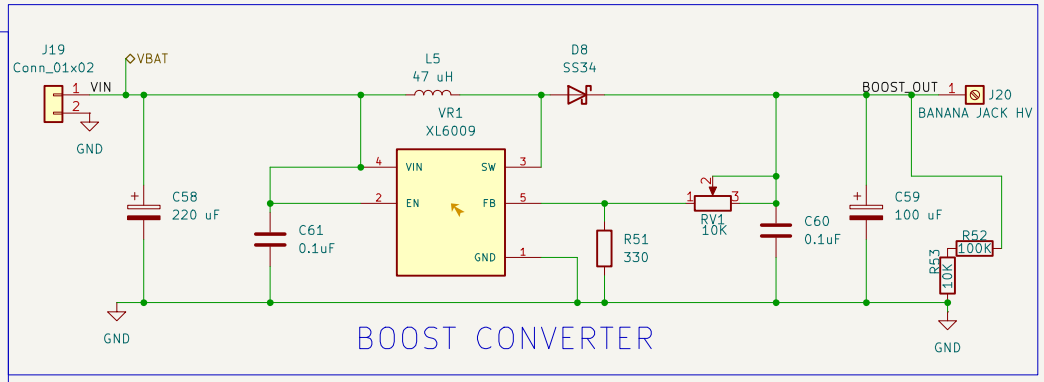

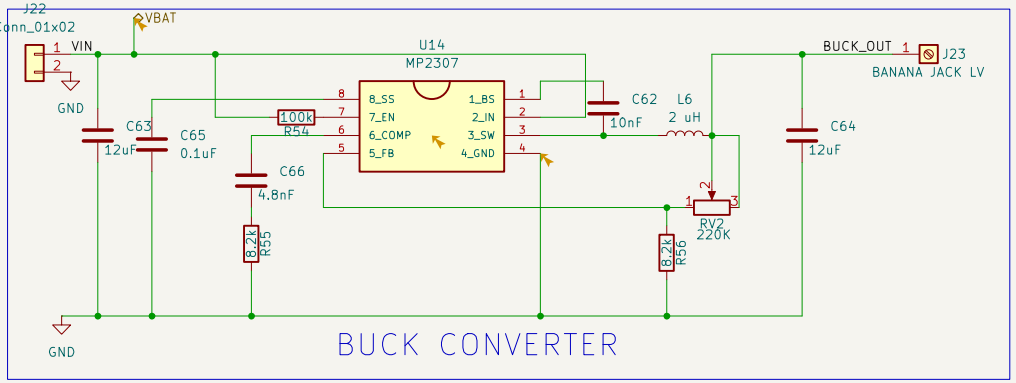

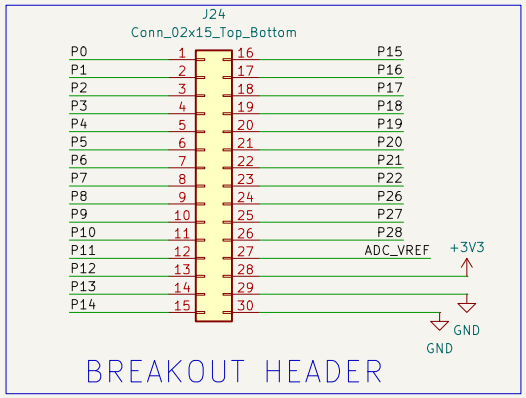

CIPHER - by ARYAN-GIT-BYTE

Sheet: /GPIO breakout board/
File: GPIO-board.kicad_sch

Title:

Size: A4	Date:	**Rev:**
KiCad E.D.A. 9.0.7		Id: 5/9

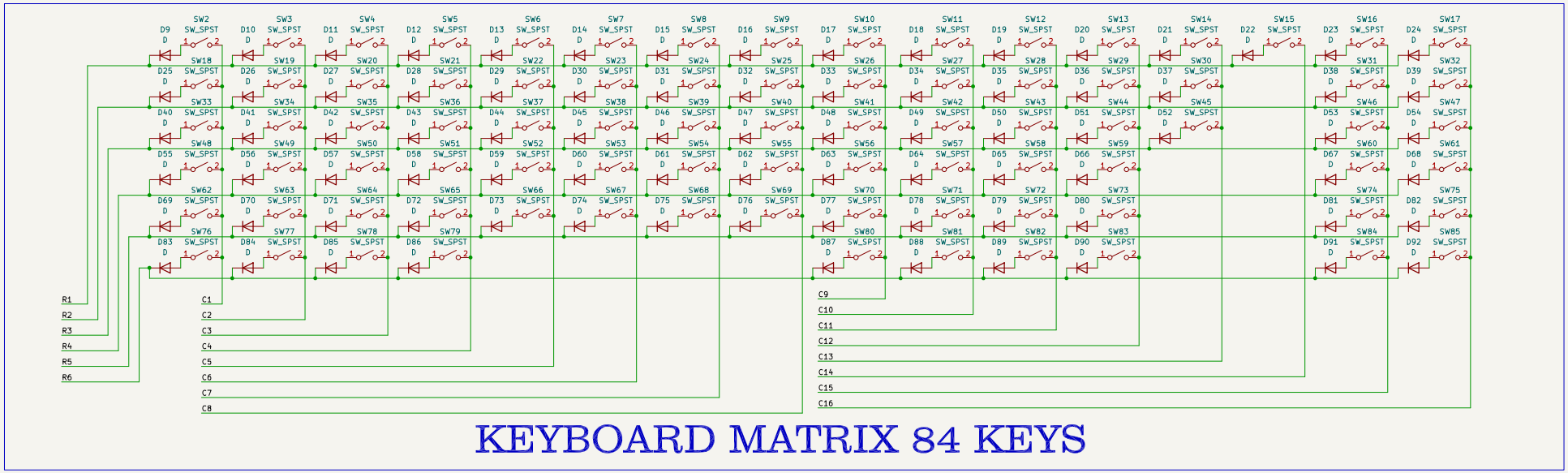

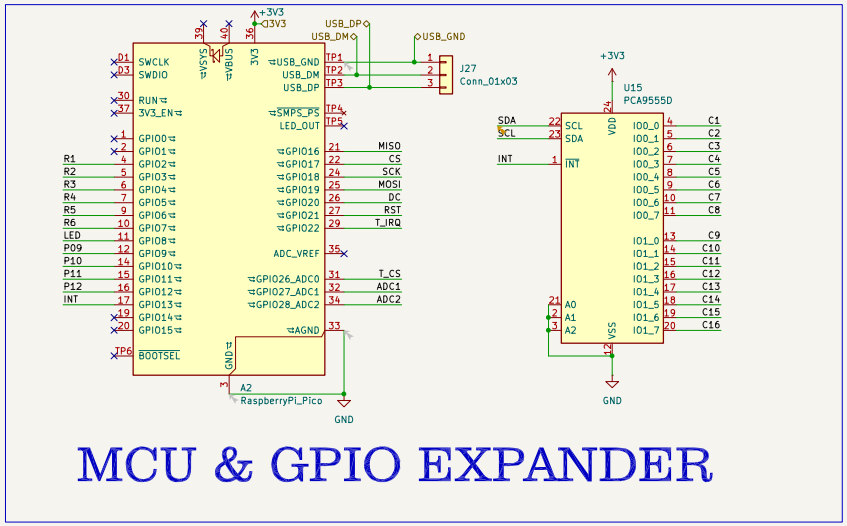

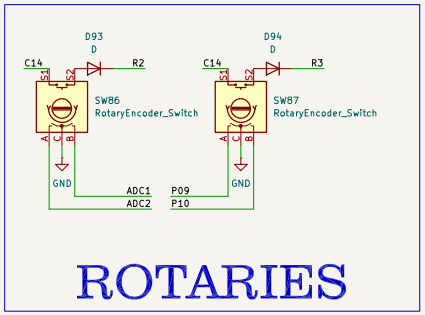

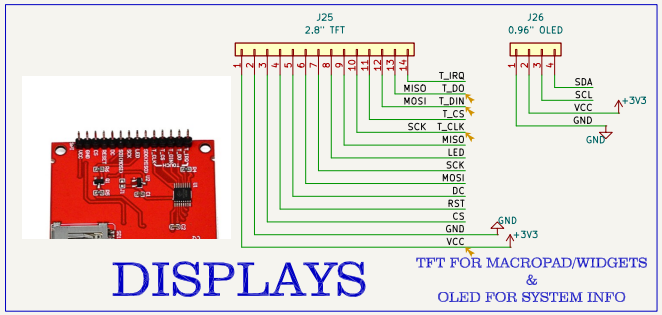

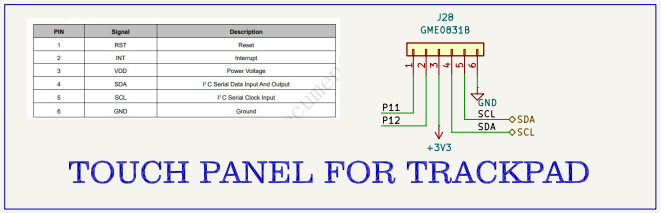

PIN	Signal	Description
1	RST	Reset
2	INT	Interrupt
3	VDD	Power Voltage
4	SDA	I²C Serial Data Input And Output
5	SCL	I²C Serial Clock Input
6	GND	Ground

CIPHER by ARYAN-GIT-BYTE

Sheet: /Navigation Board/
File: Navigation-Board.kicad_sch

Title:

Size: A3	Date:	Rev:
KiCad E.D.A. 9.0.7		Id: 6/9

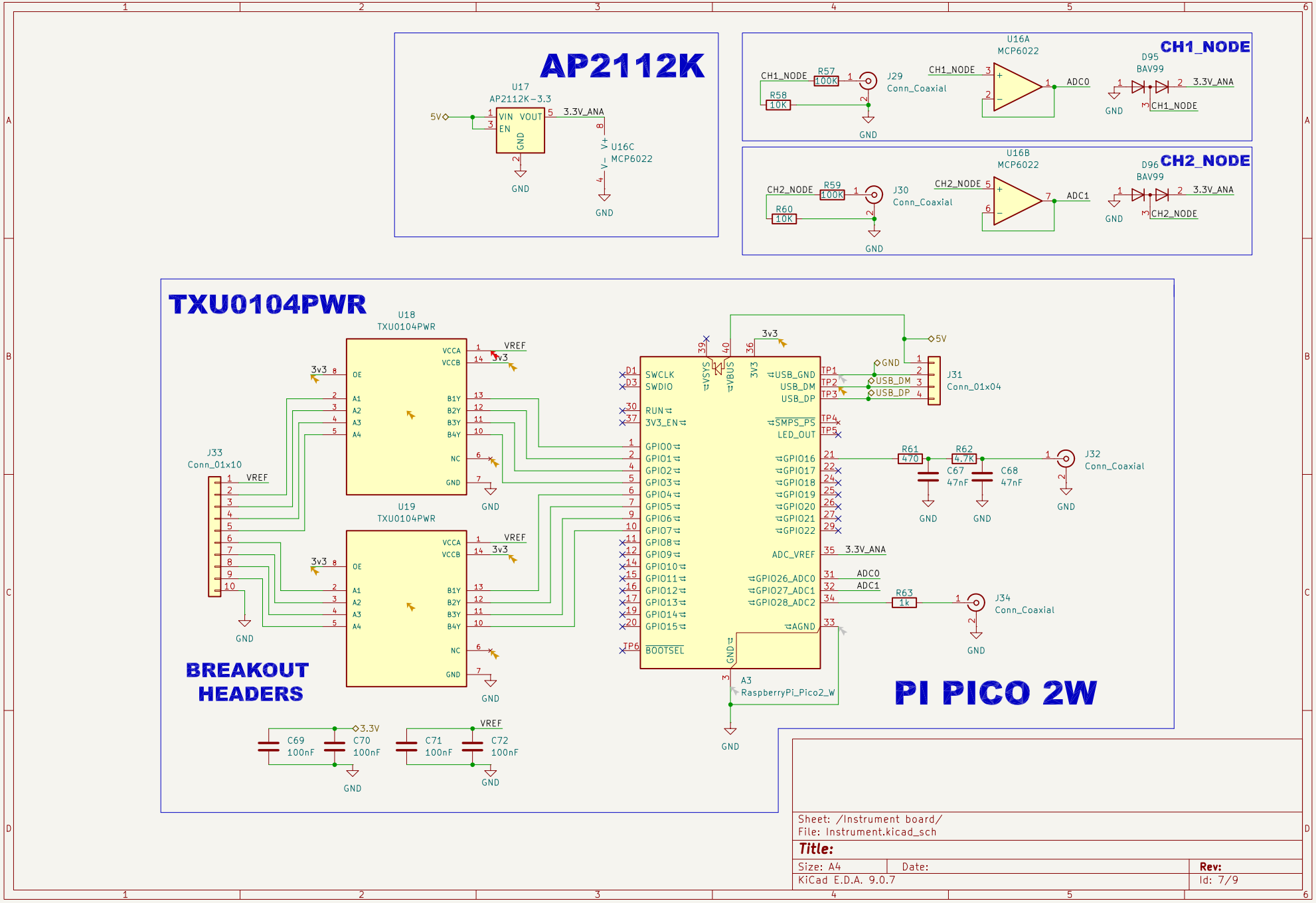

Sheet: /Instrument board/
File: Instrument.kicad_sch

Title:

Size: A4	Date:	Rev:
KiCad E.D.A. 9.0.7		Id: 7/9

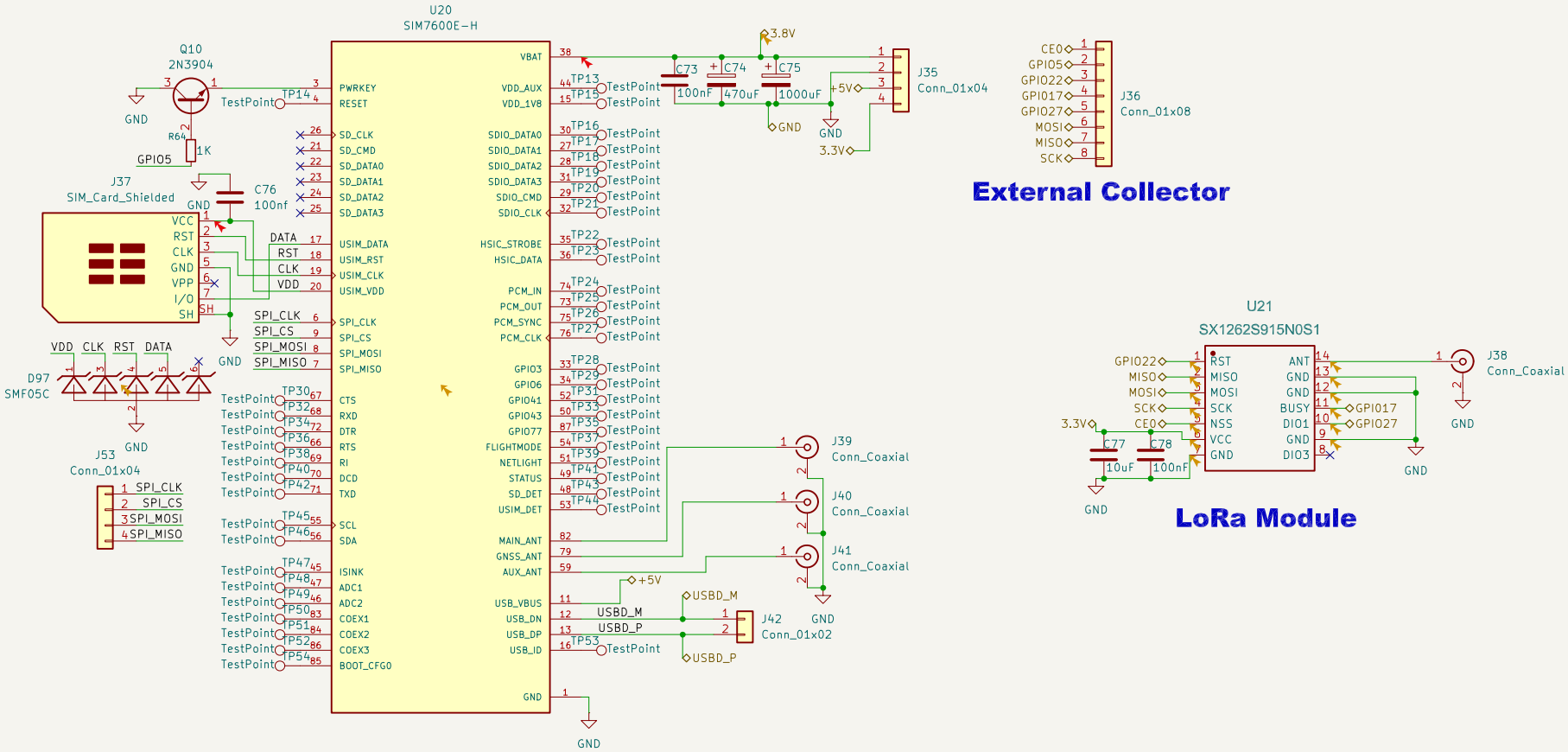

CIPHER - by ARYAN-GIT-BYTE

Sheet: /Radio Board/
File: Radio-Board.kicad_sch

Title:

Size: A4	Date:	Rev:
KiCad E.D.A. 9.0.7		Id: 8/9

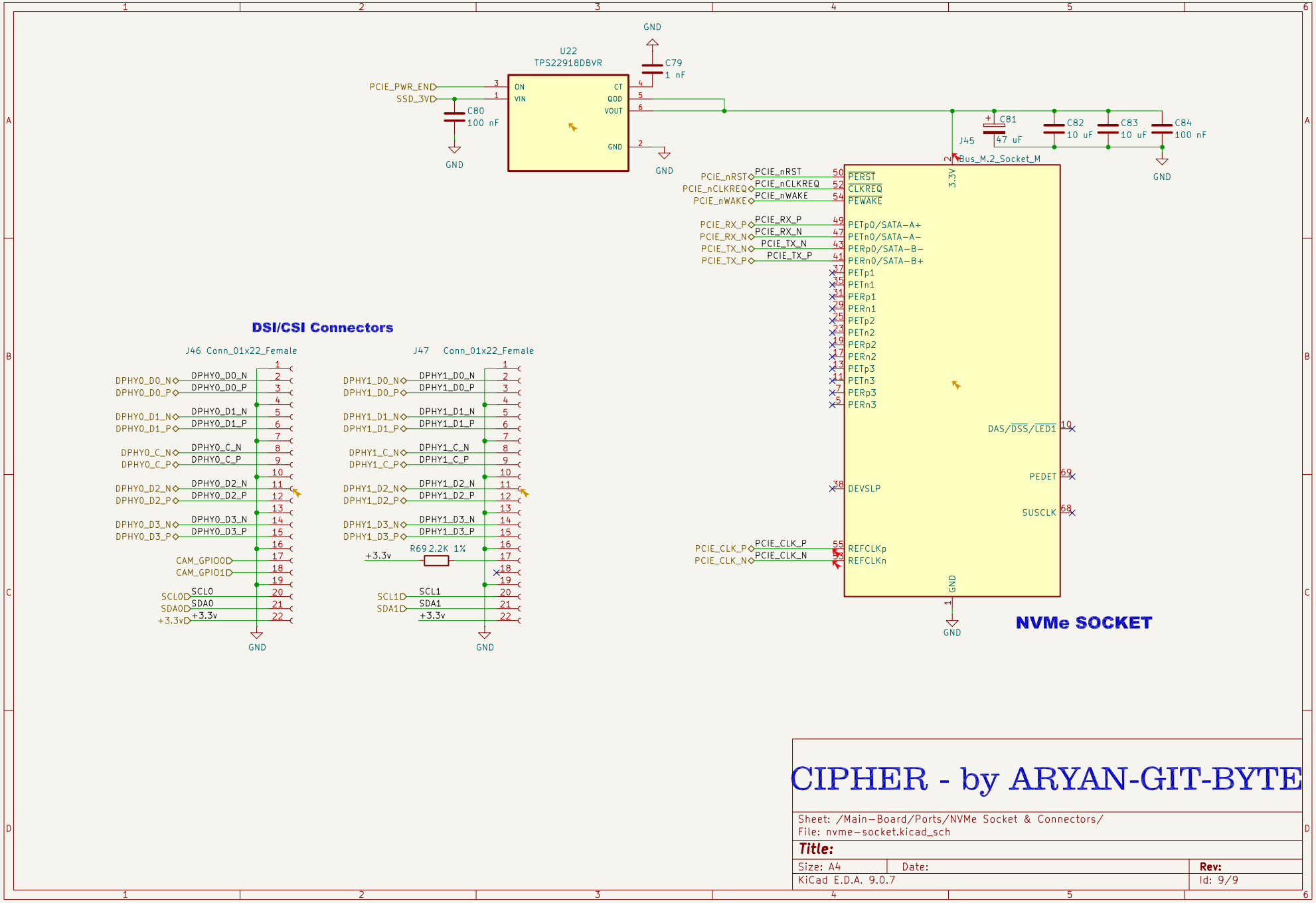

CIPHER - by ARYAN-GIT-BYTE

Sheet: /Main-Board/Ports/NVMe Socket & Connectors/
File: nvme-socket.kicad_sch

Title:

Size: A4	Date:	Rev:
KiCad E.D.A. 9.0.7		Id: 9/9

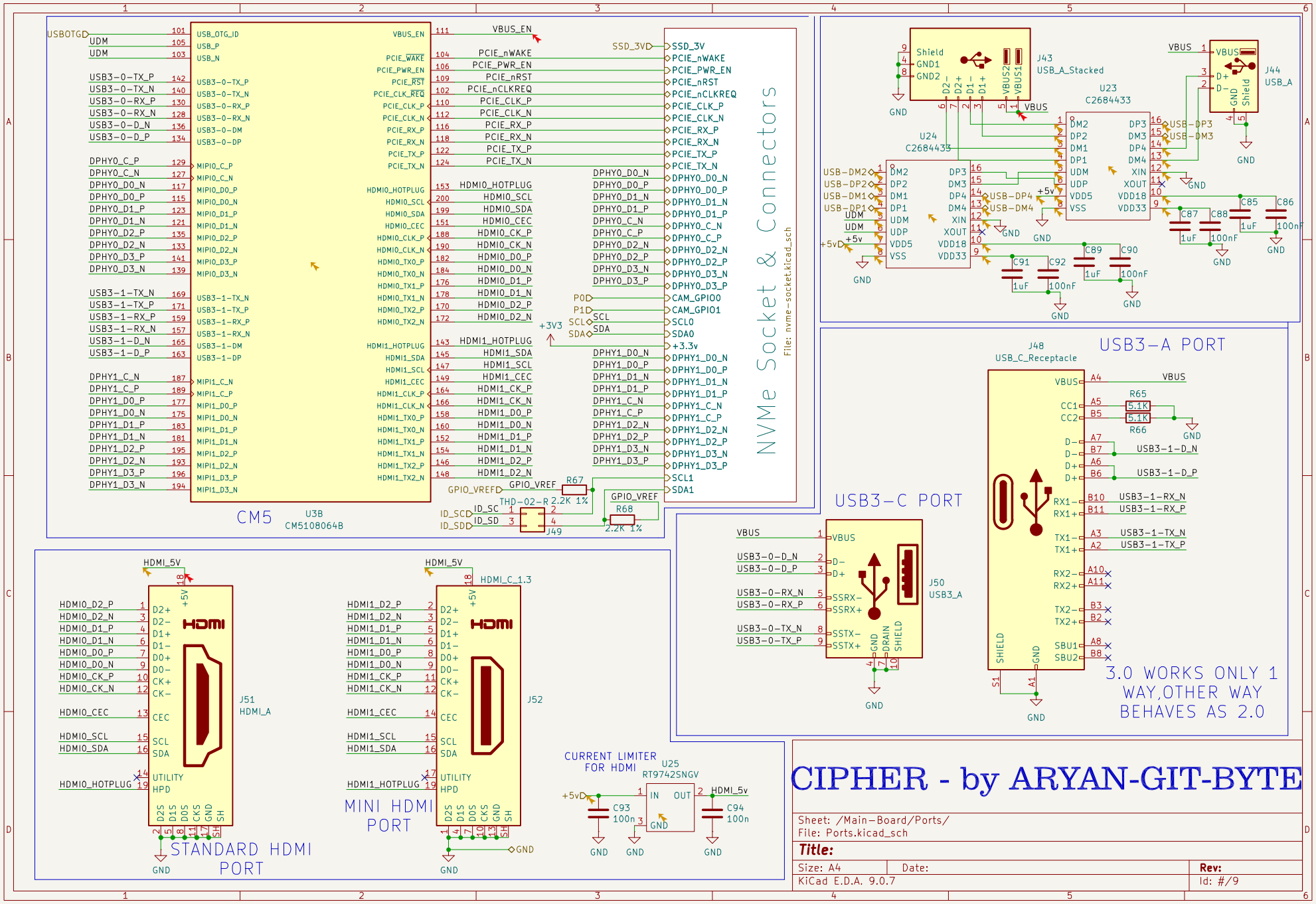
CM5
U3B
CM5108064B
NVMe Socket & Connectors
File: nvme-socket.kicad_sch
J43
USB_A_Stacked
J44
USB_A
U23
C2684433
U24
C2684433
USB3-A PORT
J48
USB_C_Receptacle
3.0 WORKS ONLY 1 WAY,OTHER WAY BEHAVES AS 2.0
USB3-C PORT
J50
USB3_A
J49
THD-02-R
J51
HDMI_A
STANDARD HDMI PORT
J52
HDMI_C_1.3
MINI HDMI PORT
CURRENT LIMITER FOR HDMI
U25
RT9742SNGV
CIPHER - by ARYAN-GIT-BYTE
Sheet: /Main-Board/Ports/
File: Ports.kicad_sch
Title:
Size: A4
Date:
Rev:
KiCad E.D.A. 9.0.7
Id: #/9