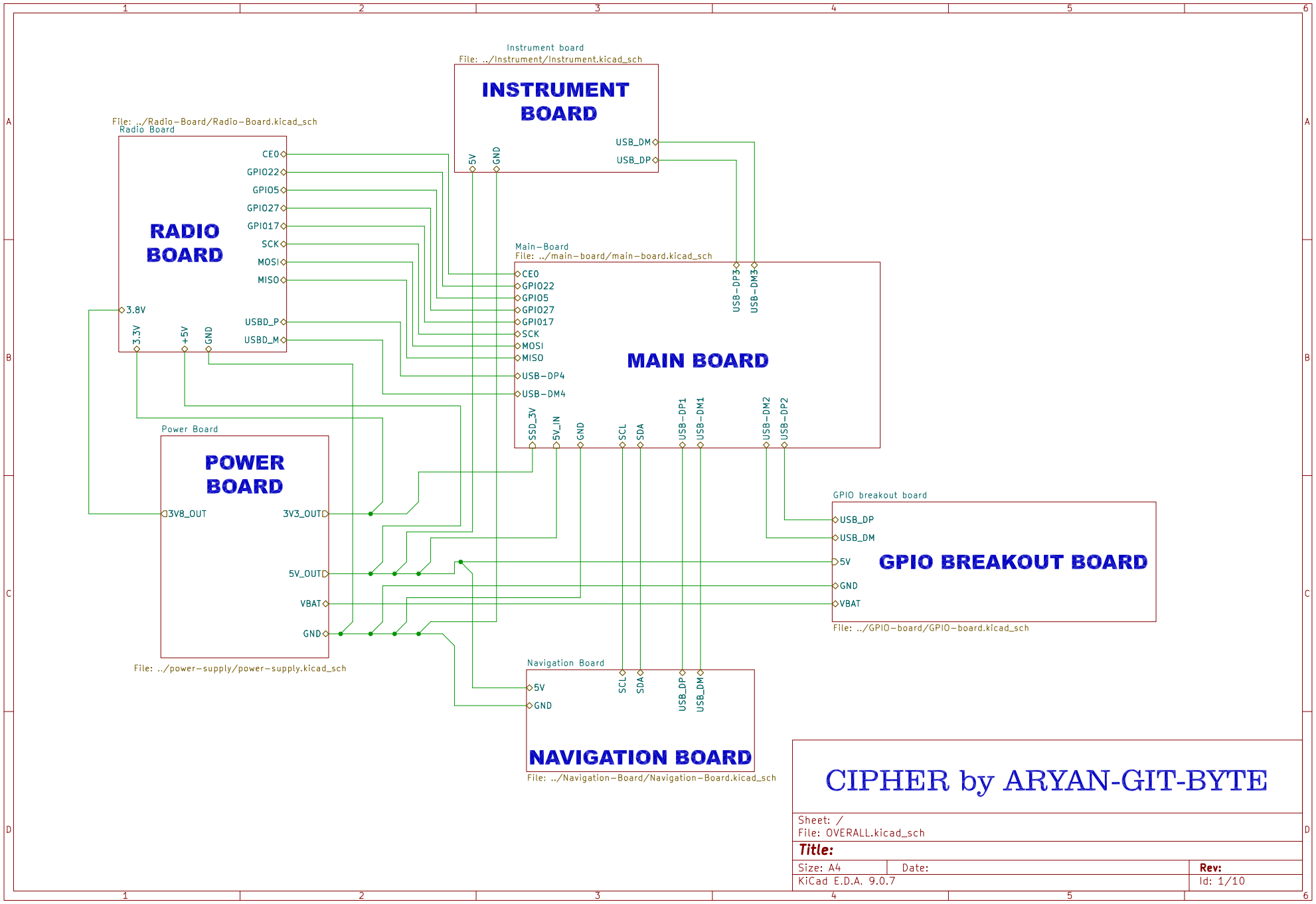

CIPHER by ARYAN-GIT-BYTE

Sheet: /
File: OVERALL.kicad_sch

Title:

Size: A4	Date:	**Rev:**
KiCad E.D.A. 9.0.7		Id: 1/10

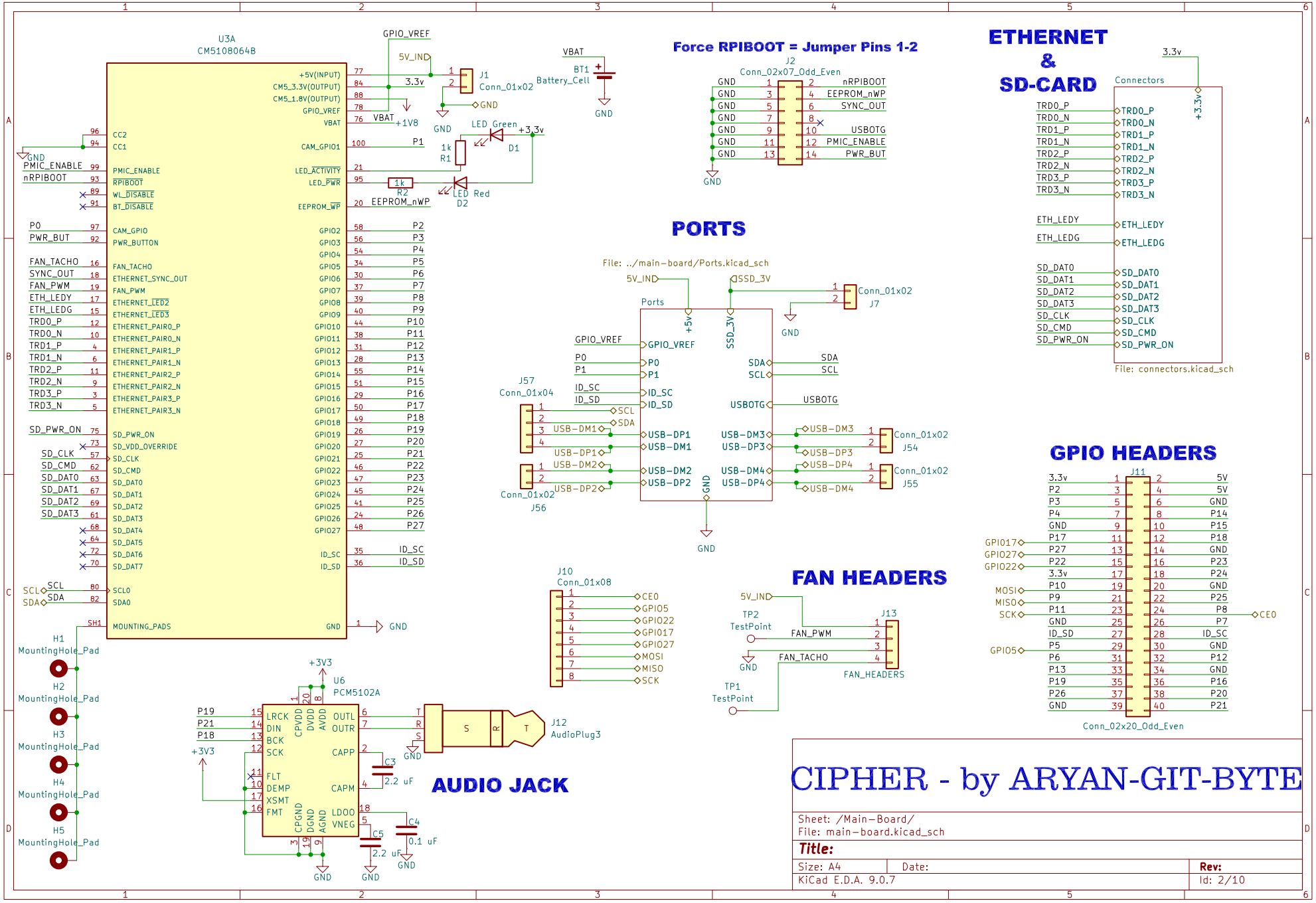
U3A
CM5108064B
Force RPIBOOT = Jumper Pins 1-2
J2
Conn_02x07_Odd_Even
ETHERNET & SD-CARD
Connectors
File: connectors.kicad_sch
PORTS
File: ../main-board/Ports.kicad_sch
Ports
J7
Conn_01x02
J57
Conn_01x04
J56
J54
J55
GPIO HEADERS
J11
Conn_02x20_Odd_Even
J10
Conn_01x08
FAN HEADERS
J13
FAN_HEADERS
TP2
TestPoint
TP1
TestPoint
U6
PCM5102A
J12
AudioPlug3
AUDIO JACK
H1
MountingHole_Pad
H2
MountingHole_Pad
H3
MountingHole_Pad
H4
MountingHole_Pad
H5
MountingHole_Pad
J1
Conn_01x02
BT1
Battery_Cell
D1
LED Green
D2
LED Red
R1
1k
R2
1k
C3
2.2 uF
C4
0.1 uF
C5
2.2 uF
CIPHER - by ARYAN-GIT-BYTE
Sheet: /Main-Board/
File: main-board.kicad_sch
Title:
Size: A4
Date:
Rev:
KiCad E.D.A. 9.0.7
Id: 2/10

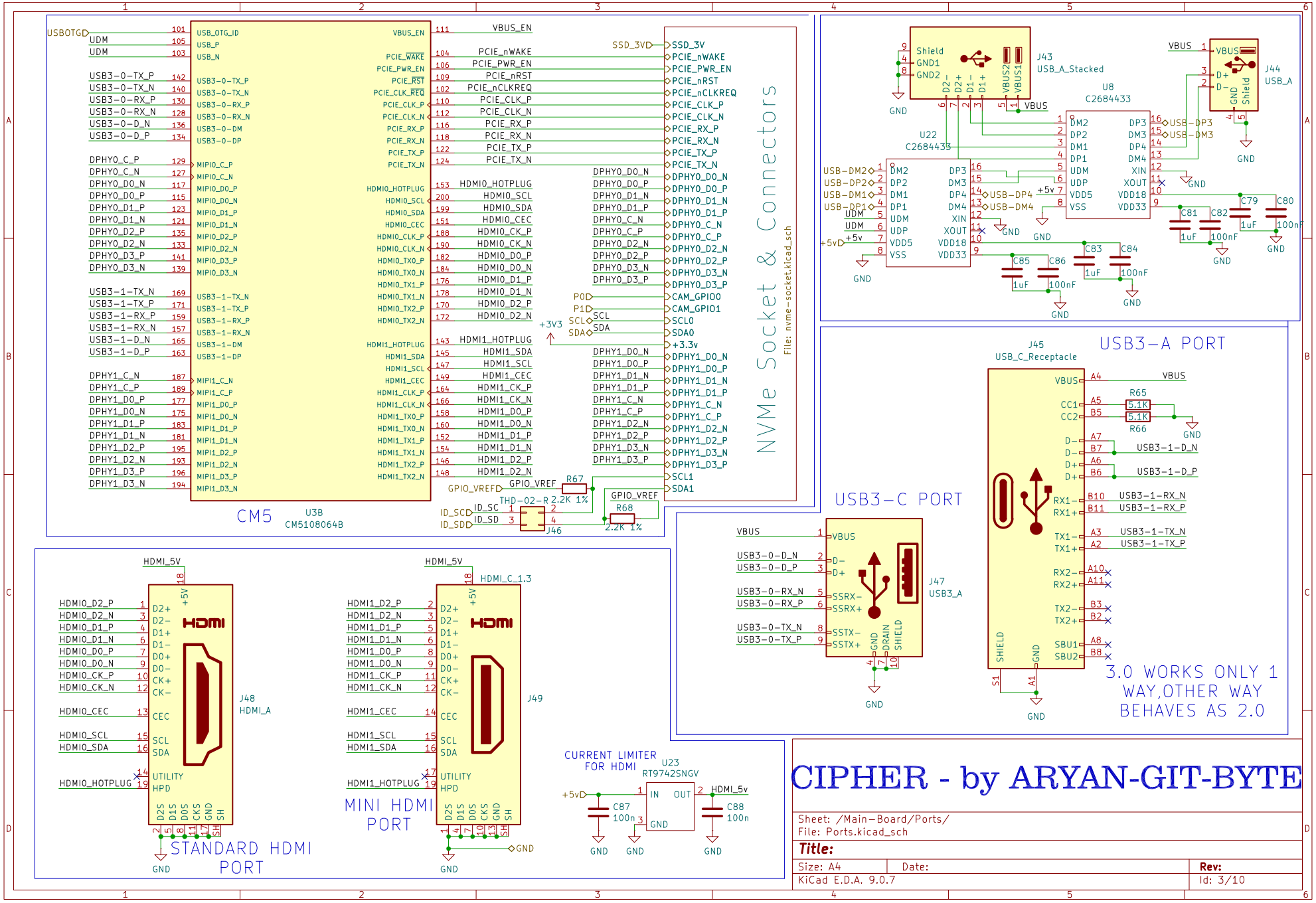
CM5
U3B
CM5108064B
NVMe Socket & Connectors
File: nvme-socket.kicad_sch
J43
USB_A_Stacked
J44
USB_A
U8
C2684433
U22
C2684433
USB3-A PORT
J45
USB_C_Receptacle
3.0 WORKS ONLY 1 WAY,OTHER WAY BEHAVES AS 2.0
USB3-C PORT
J47
USB3_A
J46
THD-02-R
J48
HDMI_A
STANDARD HDMI PORT
J49
HDMI_C_1.3
MINI HDMI PORT
CURRENT LIMITER FOR HDMI
U23
RT9742SNGV
CIPHER - by ARYAN-GIT-BYTE
Sheet: /Main-Board/Ports/
File: Ports.kicad_sch
Title:
Size: A4
Date:
Rev:
KiCad E.D.A. 9.0.7
Id: 3/10

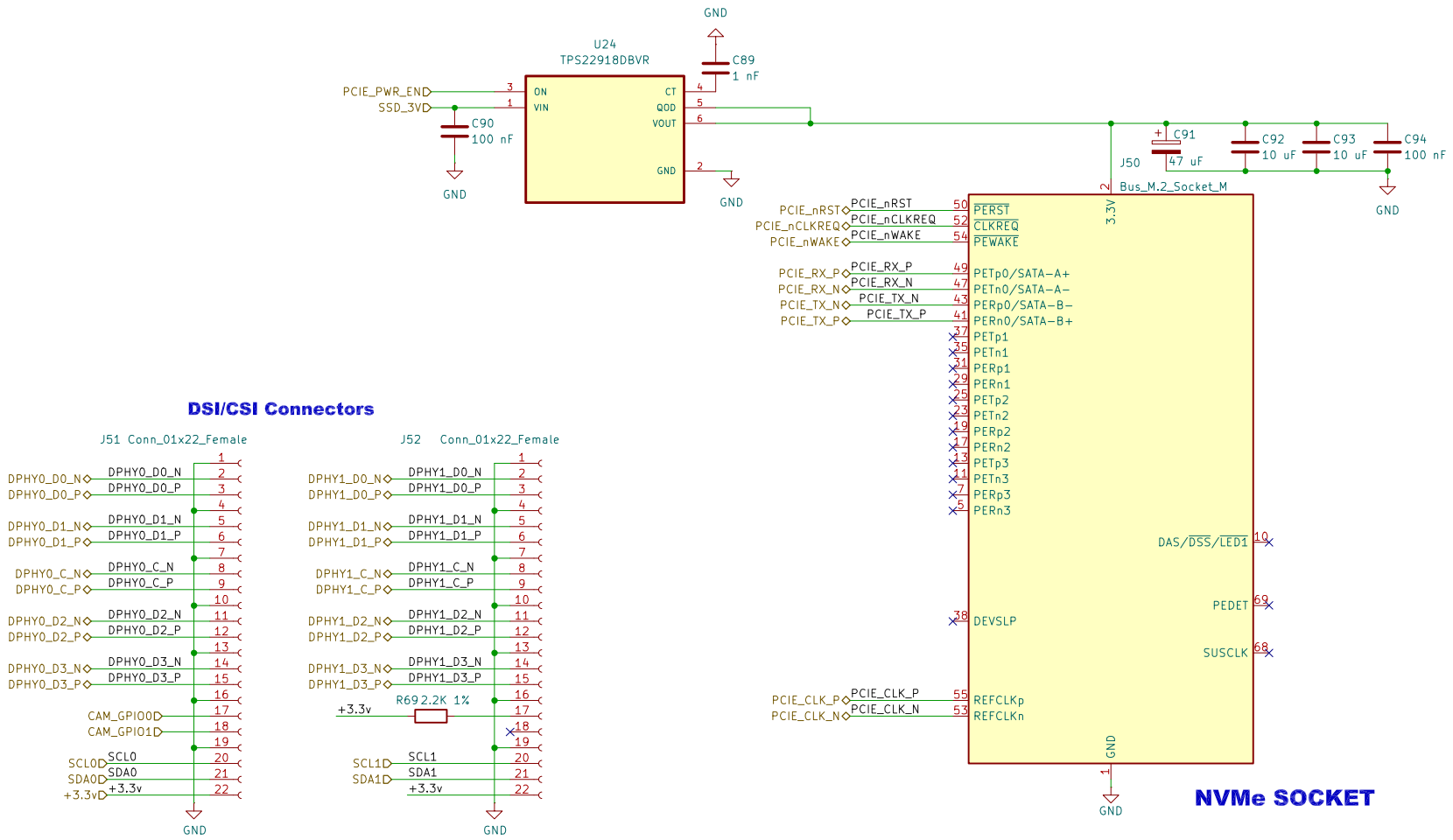

CIPHER - by ARYAN-GIT-BYTE

Sheet: /Main-Board/Ports/NVMe Socket & Connectors/
File: nvme-socket.kicad_sch

Title:

Size: A4	Date:	Rev:
KiCad E.D.A. 9.0.7		Id: 4/10

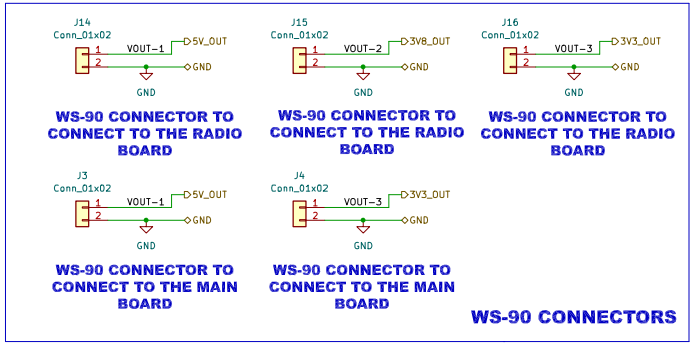

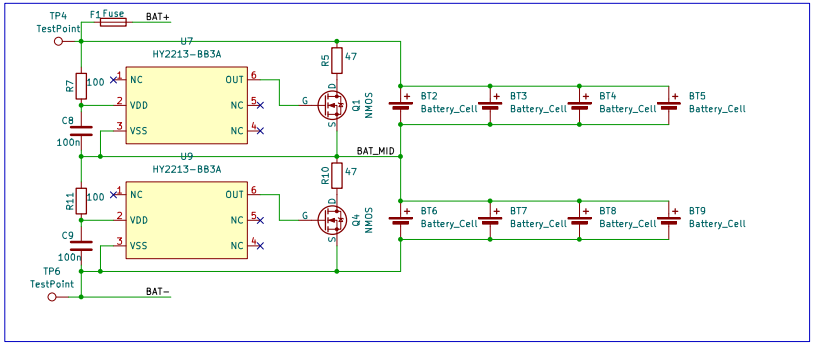

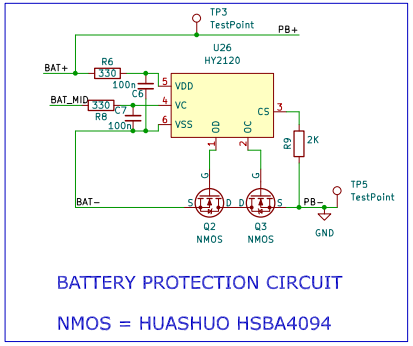

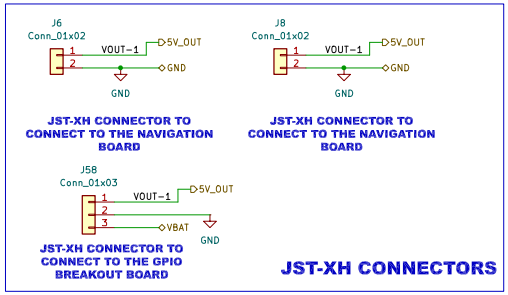

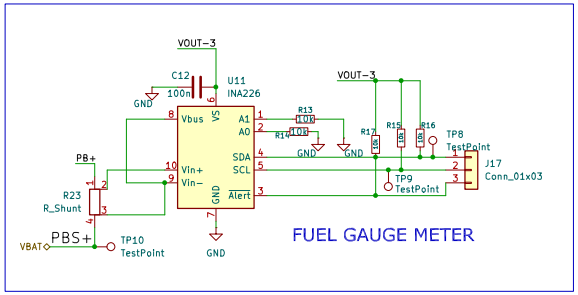

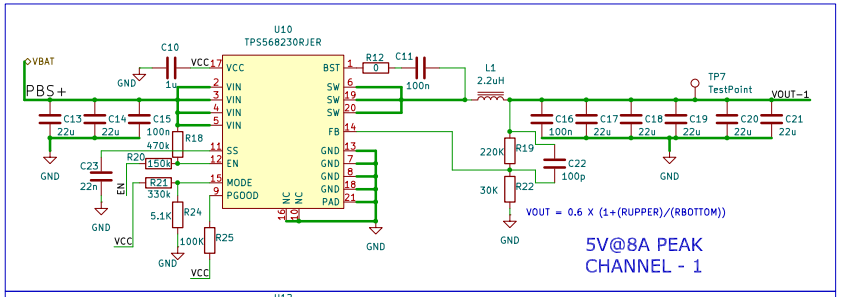

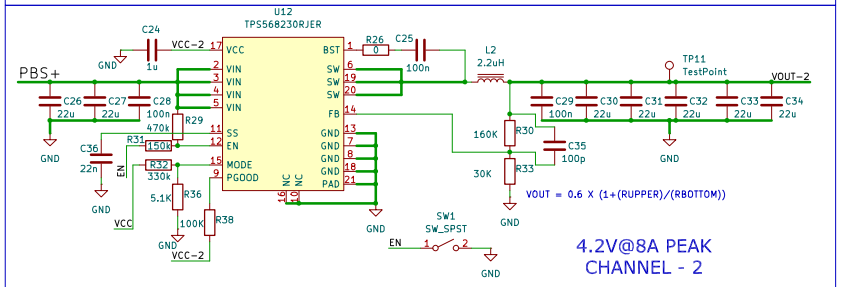

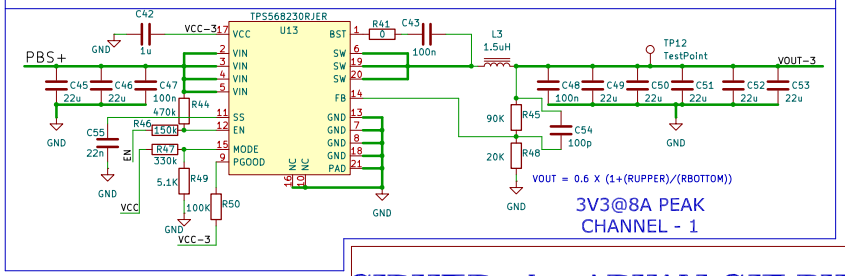

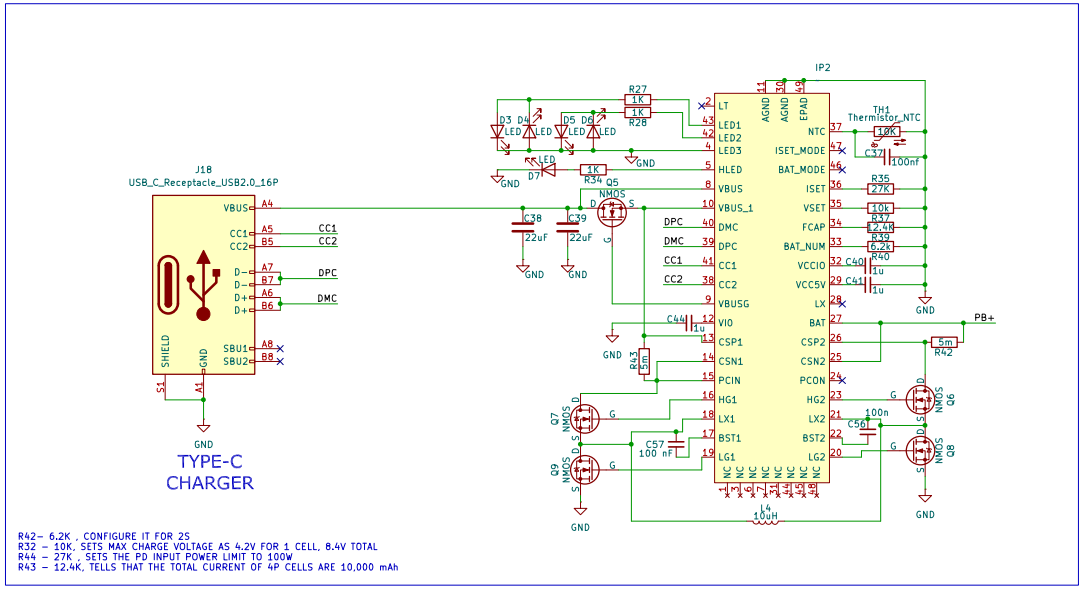

CIPHER - by ARYAN-GIT-BYTE

Sheet: /Power Board/		
File: power-supply.kicad_sch		
Title:		
Size: A3	Date:	**Rev:**
KiCad E.D.A. 9.0.7		Id: 5/10

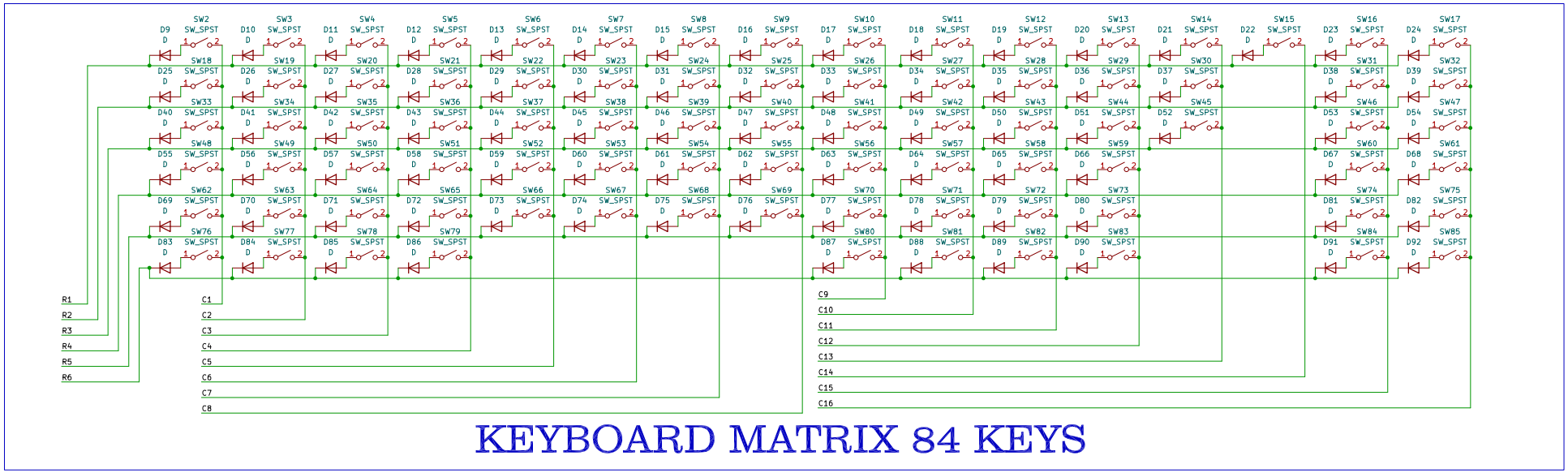

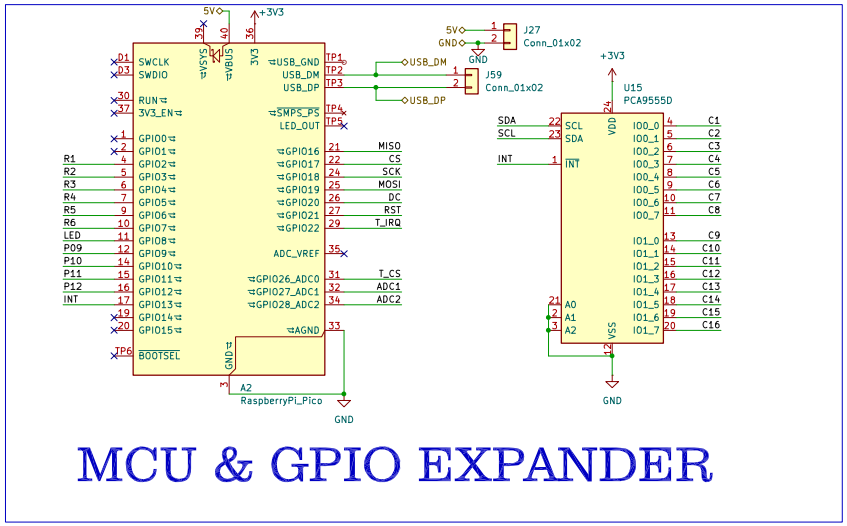

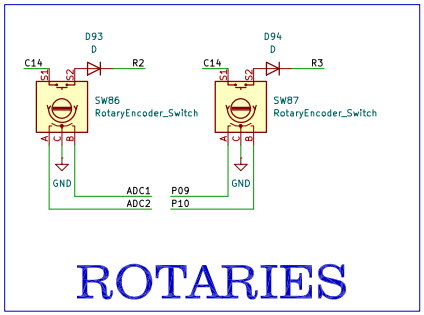

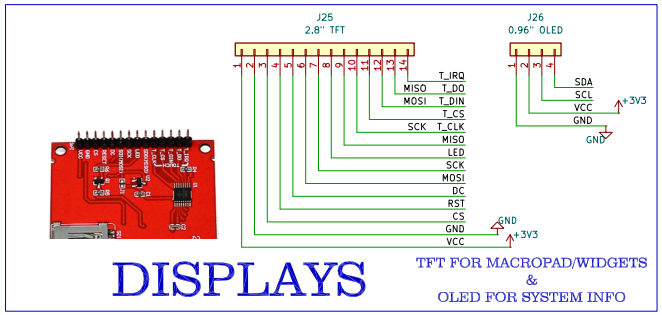

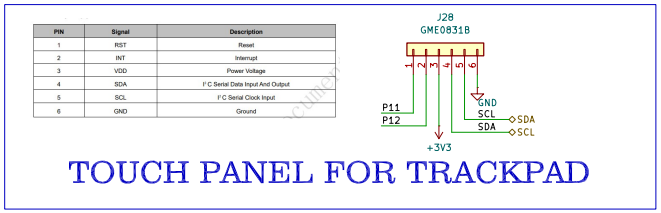

PIN	Signal	Description
1	RST	Reset
2	INT	Interrupt
3	VDD	Power Voltage
4	SDA	I²C Serial Data Input And Output
5	SCL	I²C Serial Clock Input
6	GND	Ground

CIPHER by ARYAN-GIT-BYTE

Sheet: /Navigation Board/
File: Navigation-Board.kicad_sch

Title:

Size: A3	Date:	Rev:
KiCad E.D.A. 9.0.7		Id: 6/10

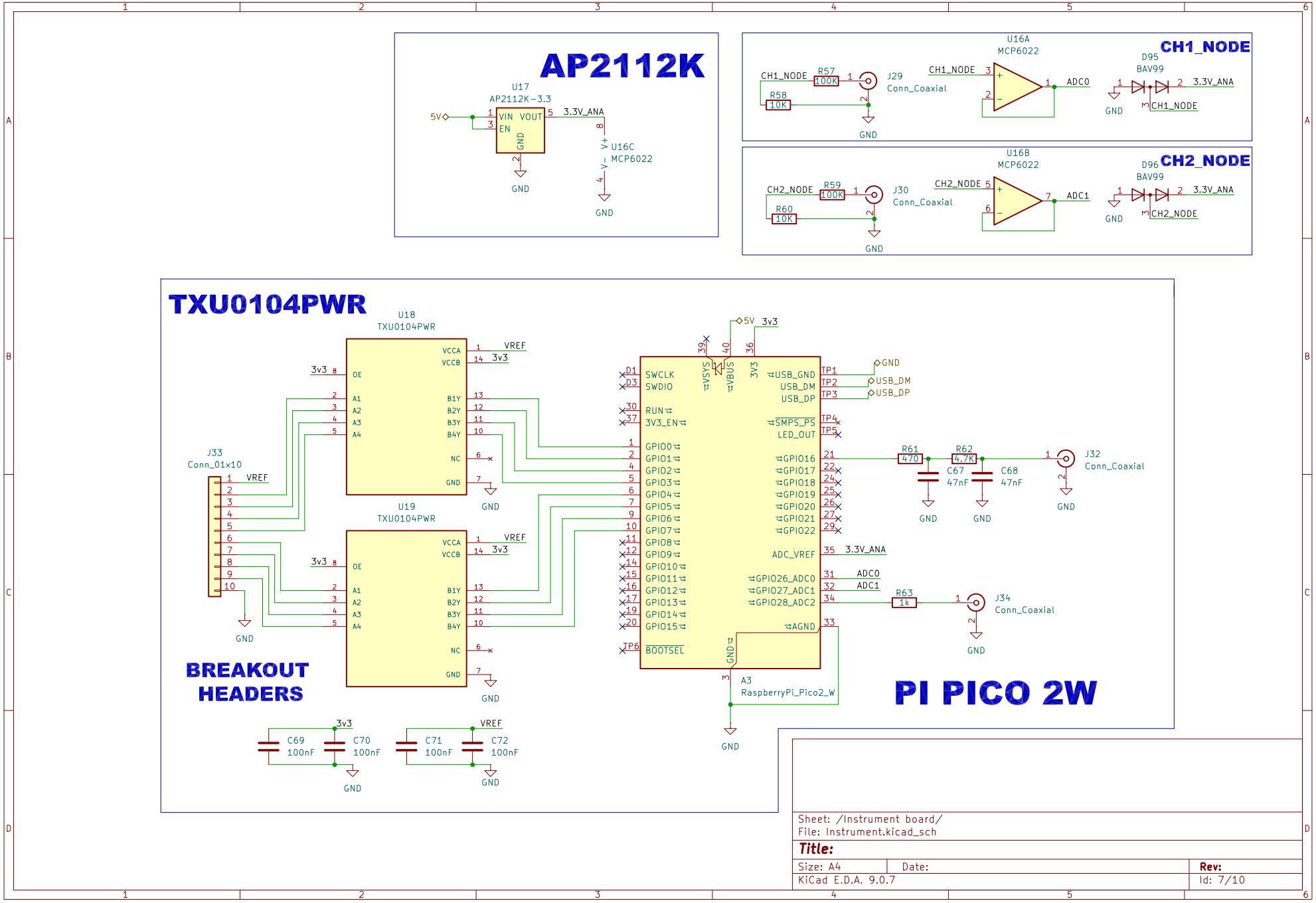
AP2112K
U17
AP2112K-3.3
5V
VIN
VOUT
EN
GND
3.3V_ANA
U16C
MCP6022
V+
V-
CH1_NODE
U16A
MCP6022
R57
100K
R58
10K
J29
Conn_Coaxial
ADC0
D95
BAV99
CH2_NODE
U16B
MCP6022
R59
100K
R60
10K
J30
Conn_Coaxial
ADC1
D96
BAV99
TXU0104PWR
U18
TXU0104PWR
U19
TXU0104PWR
VCCA
VCCB
OE
A1
A2
A3
A4
B1Y
B2Y
B3Y
B4Y
NC
VREF
3v3
J33
Conn_01x10
BREAKOUT HEADERS
SWCLK
SWDIO
RUN
3V3_EN
GPIO0
GPIO1
GPIO2
GPIO3
GPIO4
GPIO5
GPIO6
GPIO7
GPIO8
GPIO9
GPIO10
GPIO11
GPIO12
GPIO13
GPIO14
GPIO15
TP6
BOOTSEL
VSYS
VBUS
USB_GND
USB_DM
USB_DP
SMPS_PS
LED_OUT
GPIO16
GPIO17
GPIO18
GPIO19
GPIO20
GPIO21
GPIO22
ADC_VREF
GPIO26_ADC0
GPIO27_ADC1
GPIO28_ADC2
AGND
TP1
TP2
TP3
TP4
TP5
A3
RaspberryPi_Pico2_W
PI PICO 2W
R61
470
R62
4.7K
C67
47nF
C68
47nF
J32
Conn_Coaxial
R63
1k
J34
Conn_Coaxial
C69
100nF
C70
100nF
C71
100nF
C72
100nF
Sheet: /Instrument board/
File: Instrument.kicad_sch
Title:
Size: A4
Date:
Rev:
KiCad E.D.A. 9.0.7
Id: 7/10

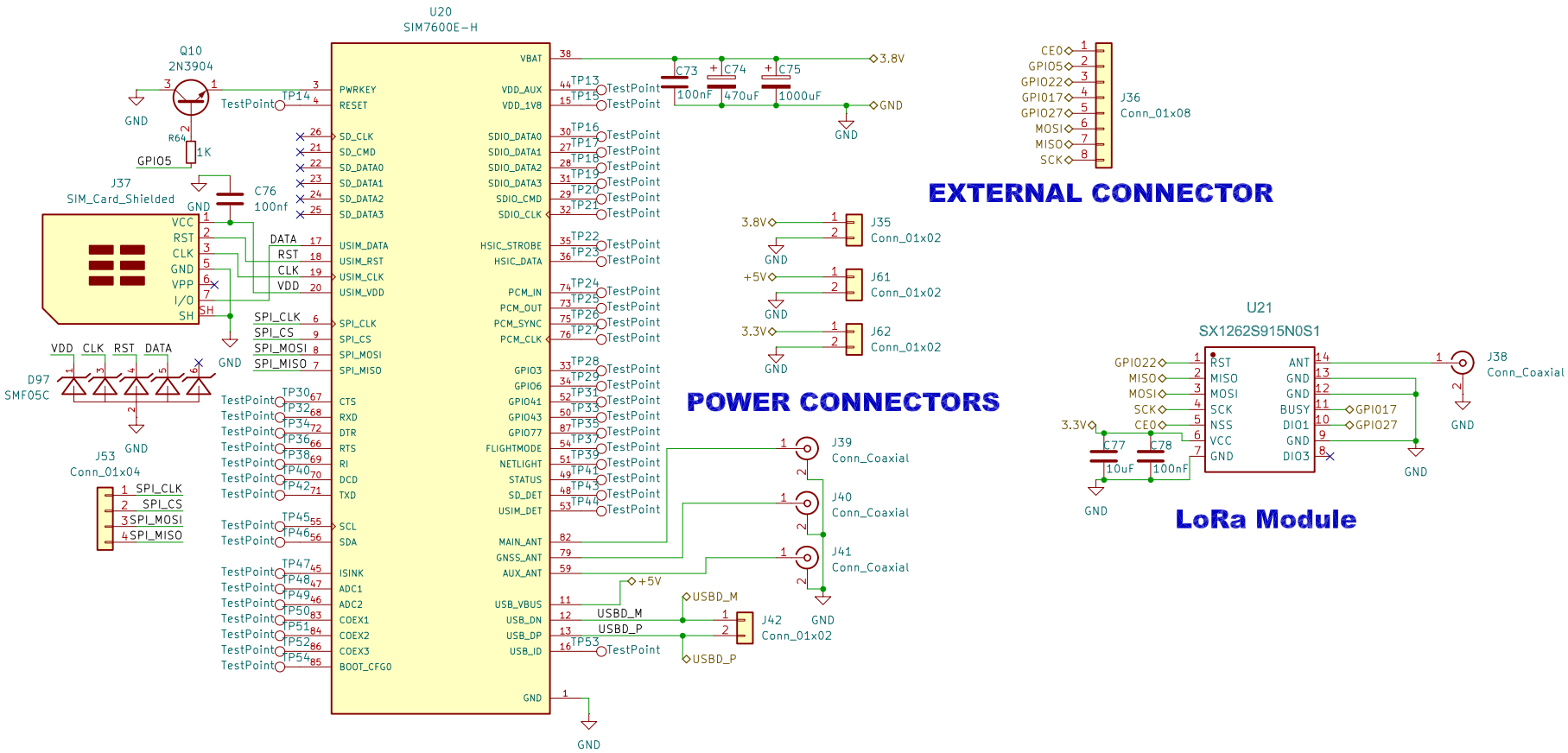

CIPHER - by ARYAN-GIT-BYTE

Sheet: /Radio Board/
File: Radio-Board.kicad_sch

Title:

Size: A4	Date:	**Rev:**
KiCad E.D.A. 9.0.7		Id: 8/10

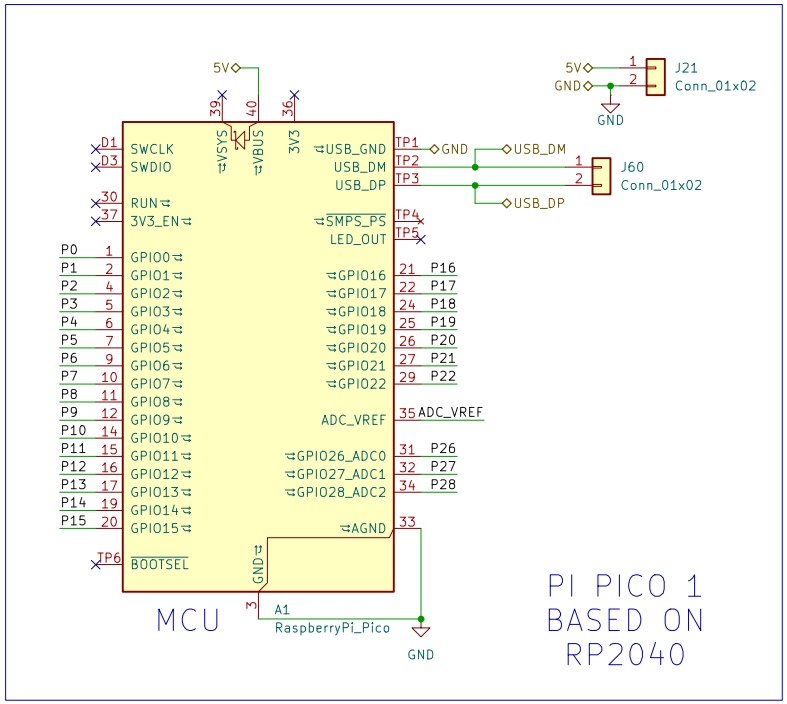

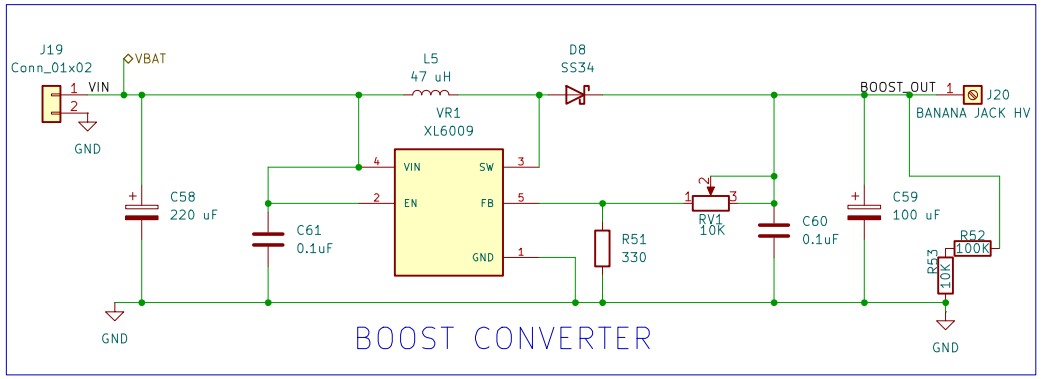

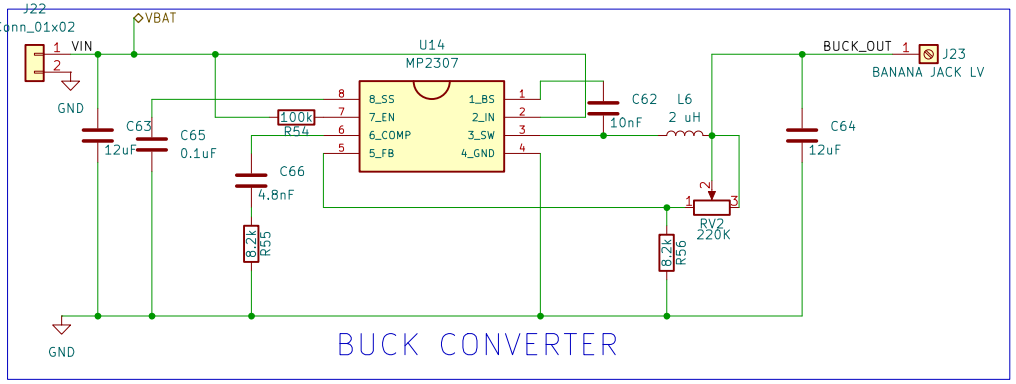

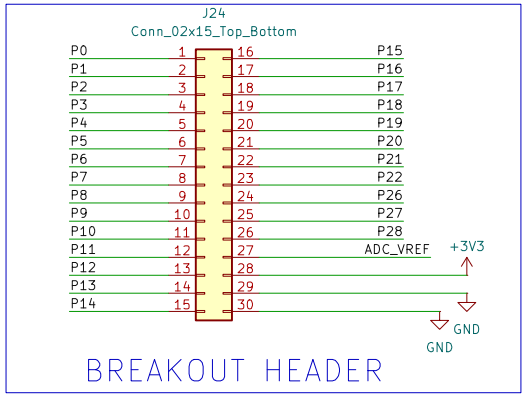

CIPHER - by ARYAN-GIT-BYTE

Sheet: /GPIO breakout board/
File: GPIO-board.kicad_sch

Title:

Size: A4	Date:	**Rev:**
KiCad E.D.A. 9.0.7		Id: 9/10

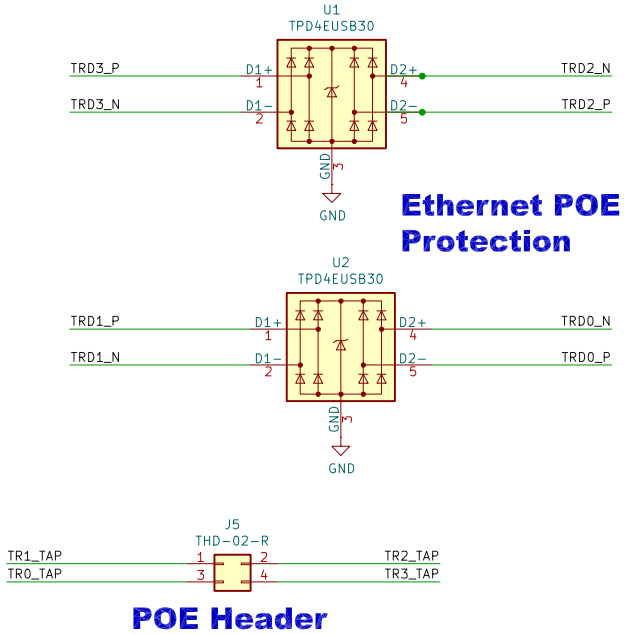

Ethernet POE Protection

POE Header

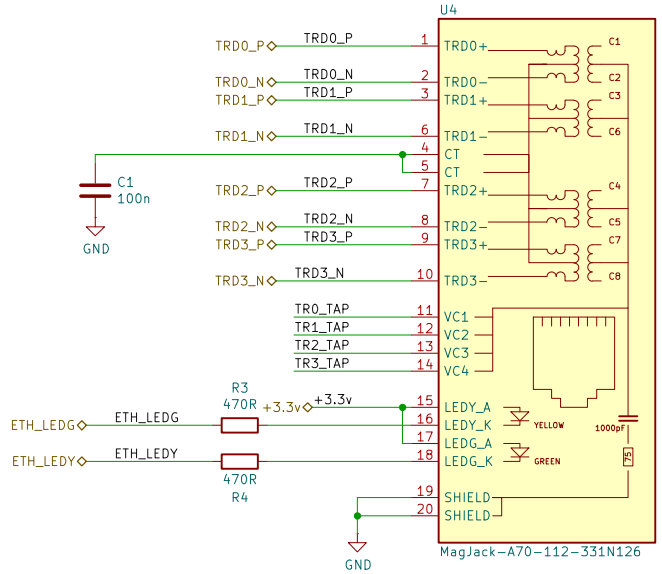

Ethernet

POWER LOAD SWITCH FOR SD CARD

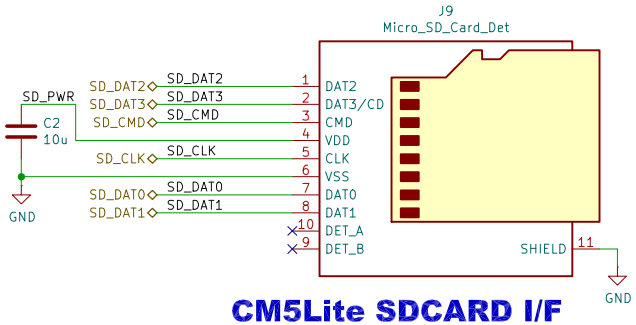

CM5Lite SDCARD I/F

Sheet: /Main-Board/Connectors/
File: connectors.kicad_sch

Title:

Size: A4	Date:	**Rev:**
KiCad E.D.A. 9.0.7		Id: 10/10