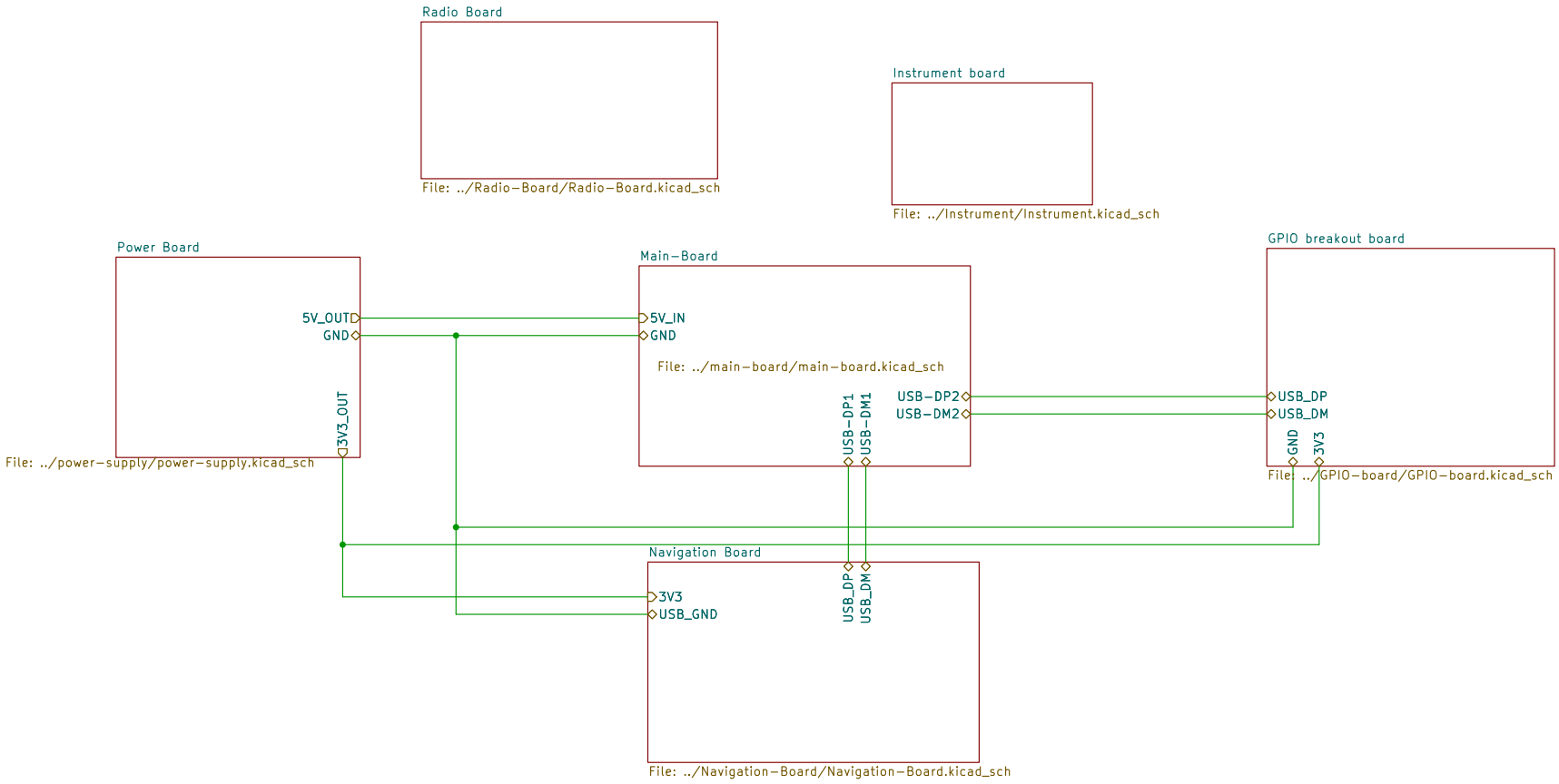

Sheet: /
File: OVERALL.kicad_sch

Title:

Size: A4	Date:	**Rev:**
KiCad E.D.A. 9.0.7		Id: 1/9

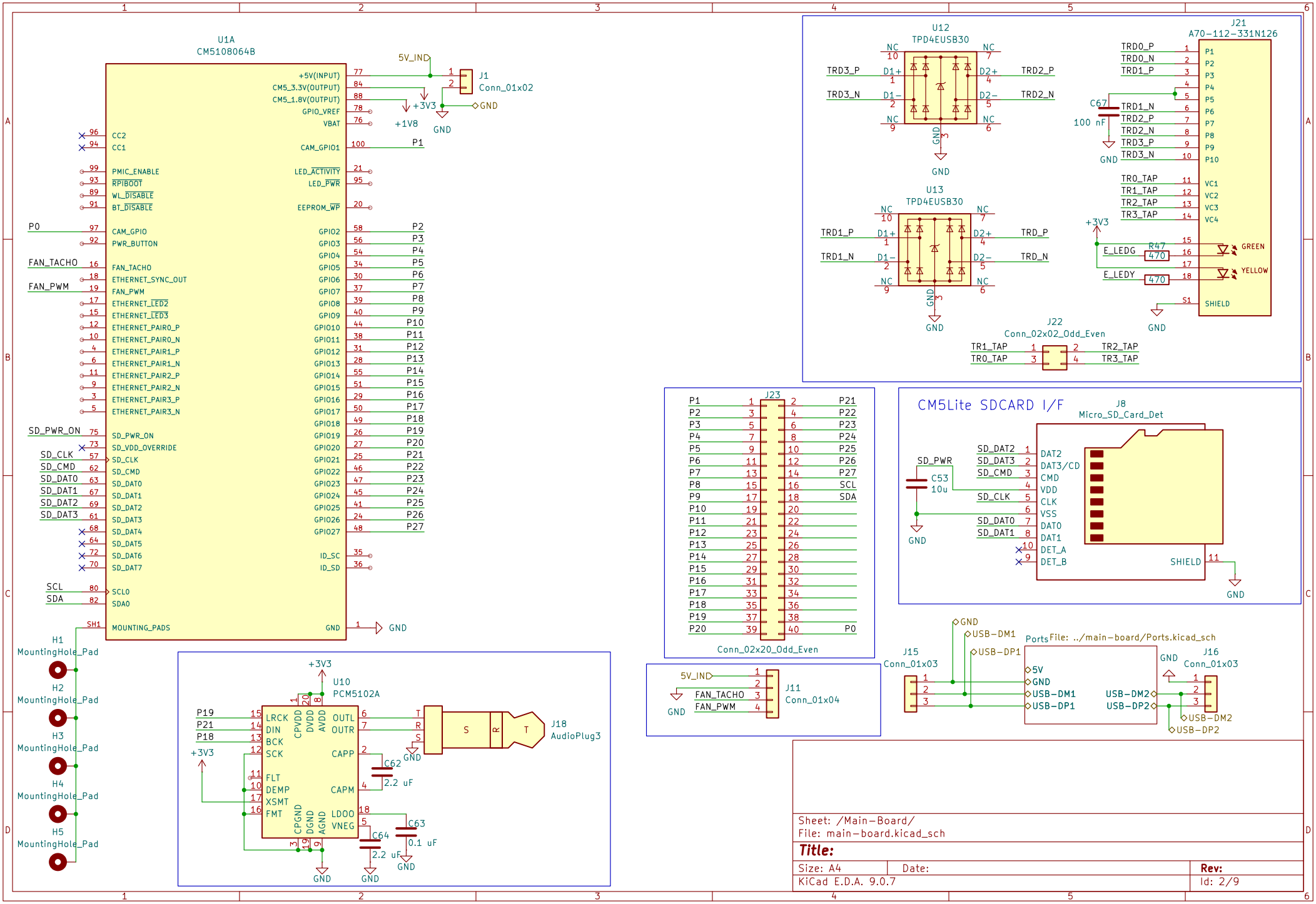
U1A
CM5108064B
+5V(INPUT)
CM5_3.3V(OUTPUT)
CM5_1.8V(OUTPUT)
GPIO_VREF
VBAT
CAM_GPIO1
LED_ACTIVITY
LED_PWR
EEPROM_WP
CC2
CC1
PMIC_ENABLE
RPIBOOT
WL_DISABLE
BT_DISABLE
CAM_GPIO
PWR_BUTTON
FAN_TACHO
ETHERNET_SYNC_OUT
FAN_PWM
ETHERNET_LED2
ETHERNET_LED3
ETHERNET_PAIR0_P
ETHERNET_PAIR0_N
ETHERNET_PAIR1_P
ETHERNET_PAIR1_N
ETHERNET_PAIR2_P
ETHERNET_PAIR2_N
ETHERNET_PAIR3_P
ETHERNET_PAIR3_N
SD_PWR_ON
SD_VDD_OVERRIDE
SD_CLK
SD_CMD
SD_DAT0
SD_DAT1
SD_DAT2
SD_DAT3
SD_DAT4
SD_DAT5
SD_DAT6
SD_DAT7
SCL0
SDA0
MOUNTING_PADS
GPIO2
GPIO3
GPIO4
GPIO5
GPIO6
GPIO7
GPIO8
GPIO9
GPIO10
GPIO11
GPIO12
GPIO13
GPIO14
GPIO15
GPIO16
GPIO17
GPIO18
GPIO19
GPIO20
GPIO21
GPIO22
GPIO23
GPIO24
GPIO25
GPIO26
GPIO27
ID_SC
ID_SD
GND
5V_IND
J1
Conn_01x02
+3V3
+1V8
GND
P1
P0
P2
P3
P4
P5
P6
P7
P8
P9
P10
P11
P12
P13
P14
P15
P16
P17
P18
P19
P20
P21
P22
P23
P24
P25
P26
P27
SCL
SDA
H1
MountingHole_Pad
H2
MountingHole_Pad
H3
MountingHole_Pad
H4
MountingHole_Pad
H5
MountingHole_Pad
U12
TPD4EUSB30
U13
TPD4EUSB30
TRD3_P
TRD3_N
TRD2_P
TRD2_N
TRD1_P
TRD1_N
TRD_P
TRD_N
J21
A70-112-331N126
TRD0_P
TRD0_N
TRD1_P
TRD1_N
TRD2_P
TRD2_N
TRD3_P
TRD3_N
TR0_TAP
TR1_TAP
TR2_TAP
TR3_TAP
C67
100 nF
E_LEDG
E_LEDY
R47
470
GREEN
YELLOW
SHIELD
J22
Conn_02x02_Odd_Even
J23
Conn_02x20_Odd_Even
CM5Lite SDCARD I/F
J8
Micro_SD_Card_Det
SD_PWR
C53
10u
SD_DAT2
SD_DAT3
SD_CMD
SD_CLK
SD_DAT0
SD_DAT1
DAT2
DAT3/CD
CMD
VDD
CLK
VSS
DAT0
DAT1
DET_A
DET_B
SHIELD
J11
Conn_01x04
FAN_TACHO
FAN_PWM
J15
Conn_01x03
USB-DM1
USB-DP1
Ports
File: ../main-board/Ports.kicad_sch
5V
USB-DM2
USB-DP2
J16
Conn_01x03
U10
PCM5102A
LRCK
DIN
BCK
SCK
FLT
DEMP
XSMT
FMT
CPVDD
DVDD
AVDD
CPGND
DGND
AGND
OUTL
OUTR
CAPP
CAPM
LDOO
VNEG
C62
2.2 uF
C63
0.1 uF
C64
2.2 uF
J18
AudioPlug3
S
R
T
Sheet: /Main-Board/
File: main-board.kicad_sch
Title:
Size: A4
Date:
Rev:
KiCad E.D.A. 9.0.7
Id: 2/9

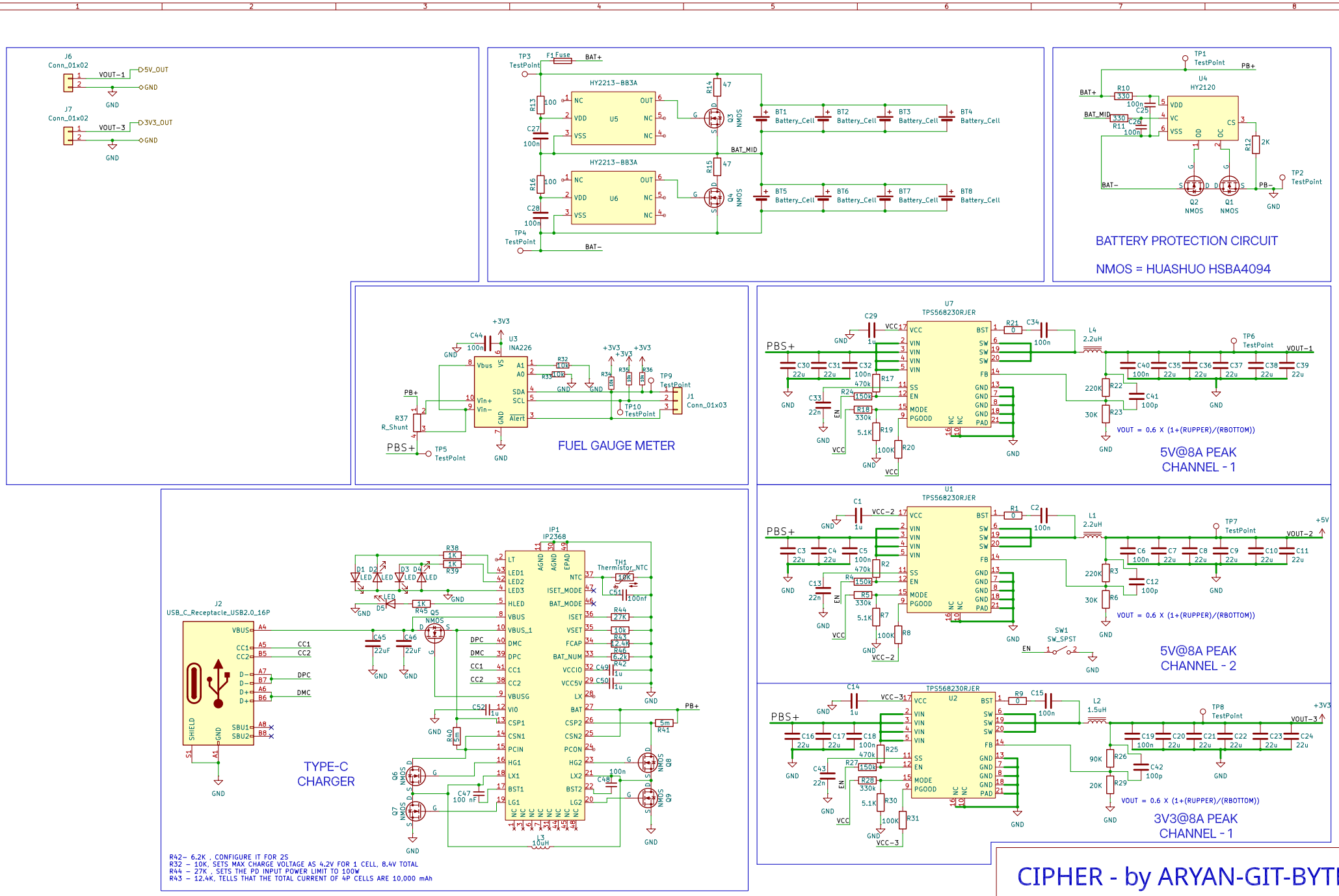

CIPHER - by ARYAN-GIT-BYTE

Sheet: /Power Board/
File: power-supply.kicad_sch

Title:

Size: A3	Date:	Rev:
KiCad E.D.A. 9.0.7		Id: 4/9

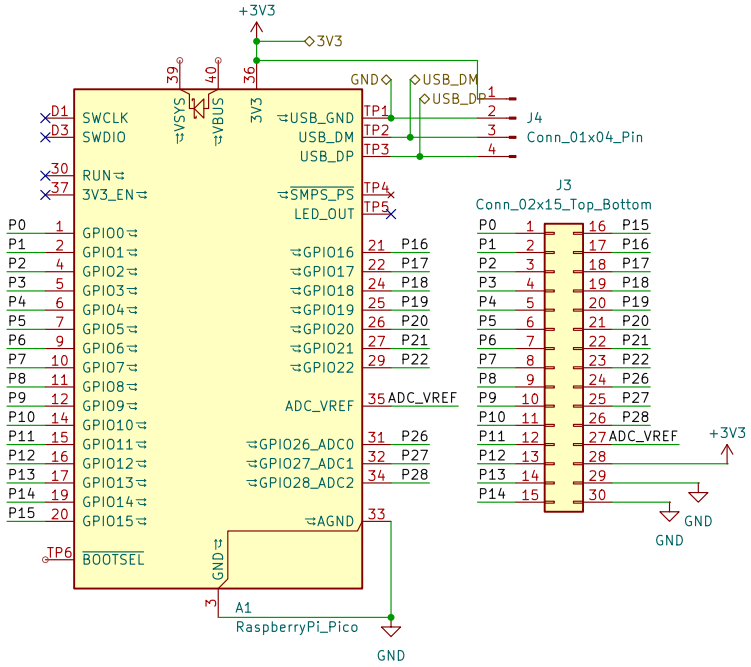

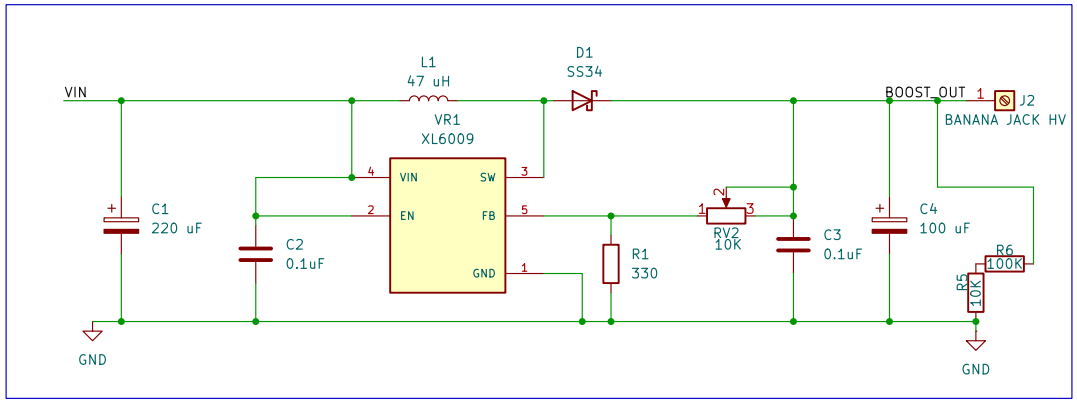

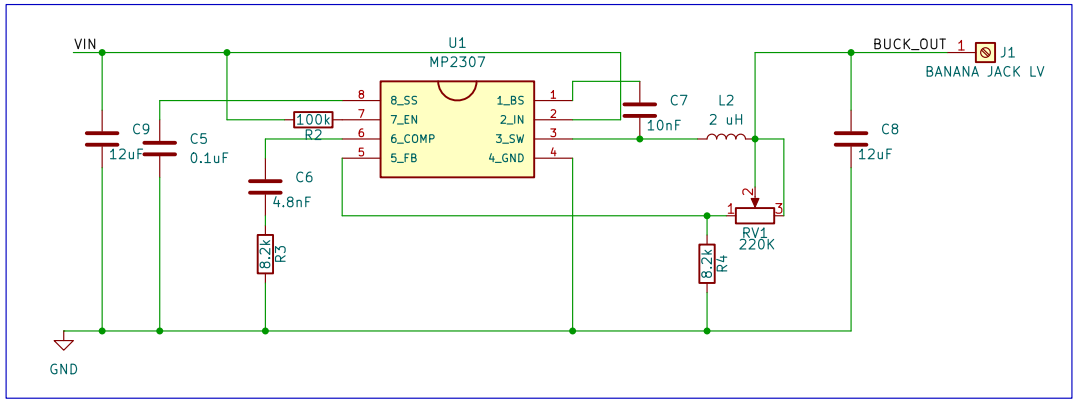

Sheet: /GPIO breakout board/
File: GPIO-board.kicad_sch

Title:

Size: A4	Date:	**Rev:**
KiCad E.D.A. 9.0.7		Id: 5/9

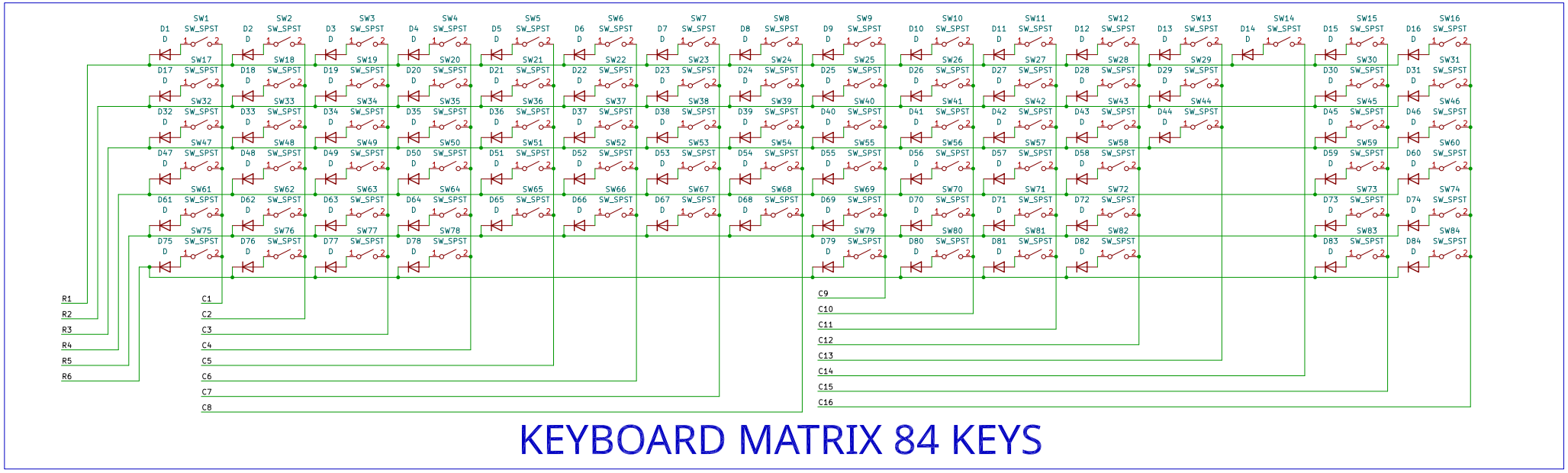

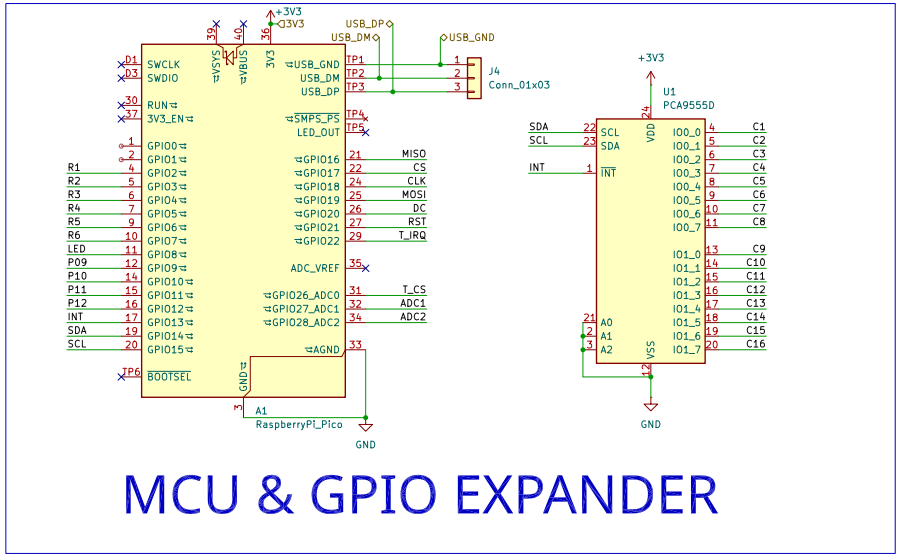

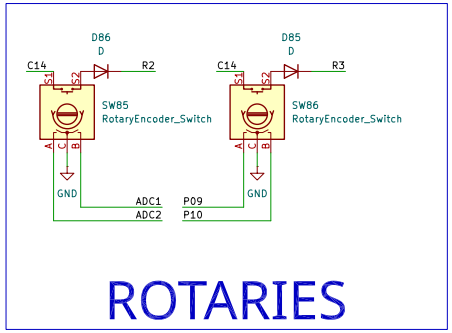

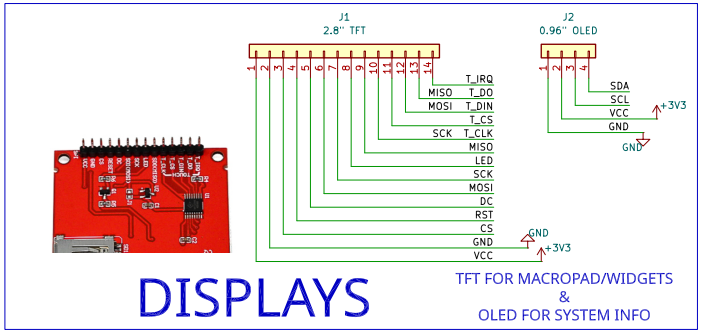

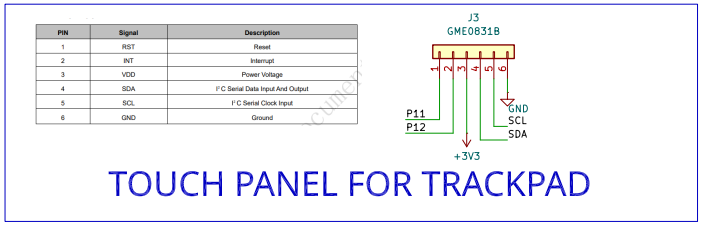

PIN	Signal	Description
1	RST	Reset
2	INT	Interrupt
3	VDD	Power Voltage
4	SDA	I²C Serial Data Input And Output
5	SCL	I²C Serial Clock Input
6	GND	Ground

CIPHER by ARYAN-GIT-BYTE

Sheet: /Navigation Board/
File: Navigation-Board.kicad_sch

Title:

Size: A3 | Date: | **Rev:**
KiCad E.D.A. 9.0.7 | Id: 6/9

Sheet: /Instrument board/
File: Instrument.kicad_sch

Title:

Size: A4	Date:	**Rev:**
KiCad E.D.A. 9.0.7		Id: 7/9

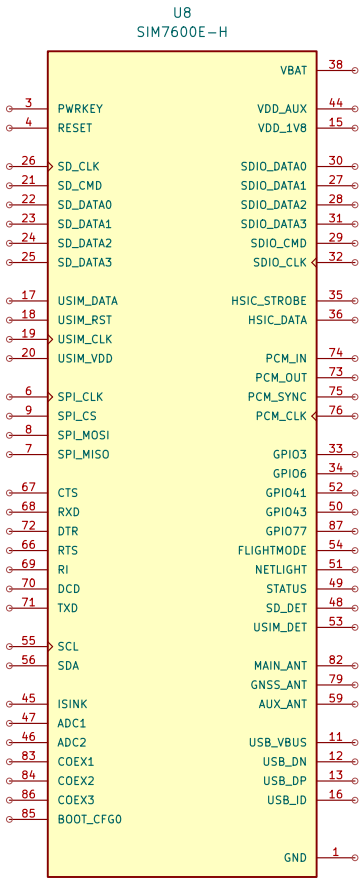

Sheet: /Radio Board/
File: Radio-Board.kicad_sch

Title:

Size: A4	Date:	**Rev:**
KiCad E.D.A. 9.0.7		Id: 8/9

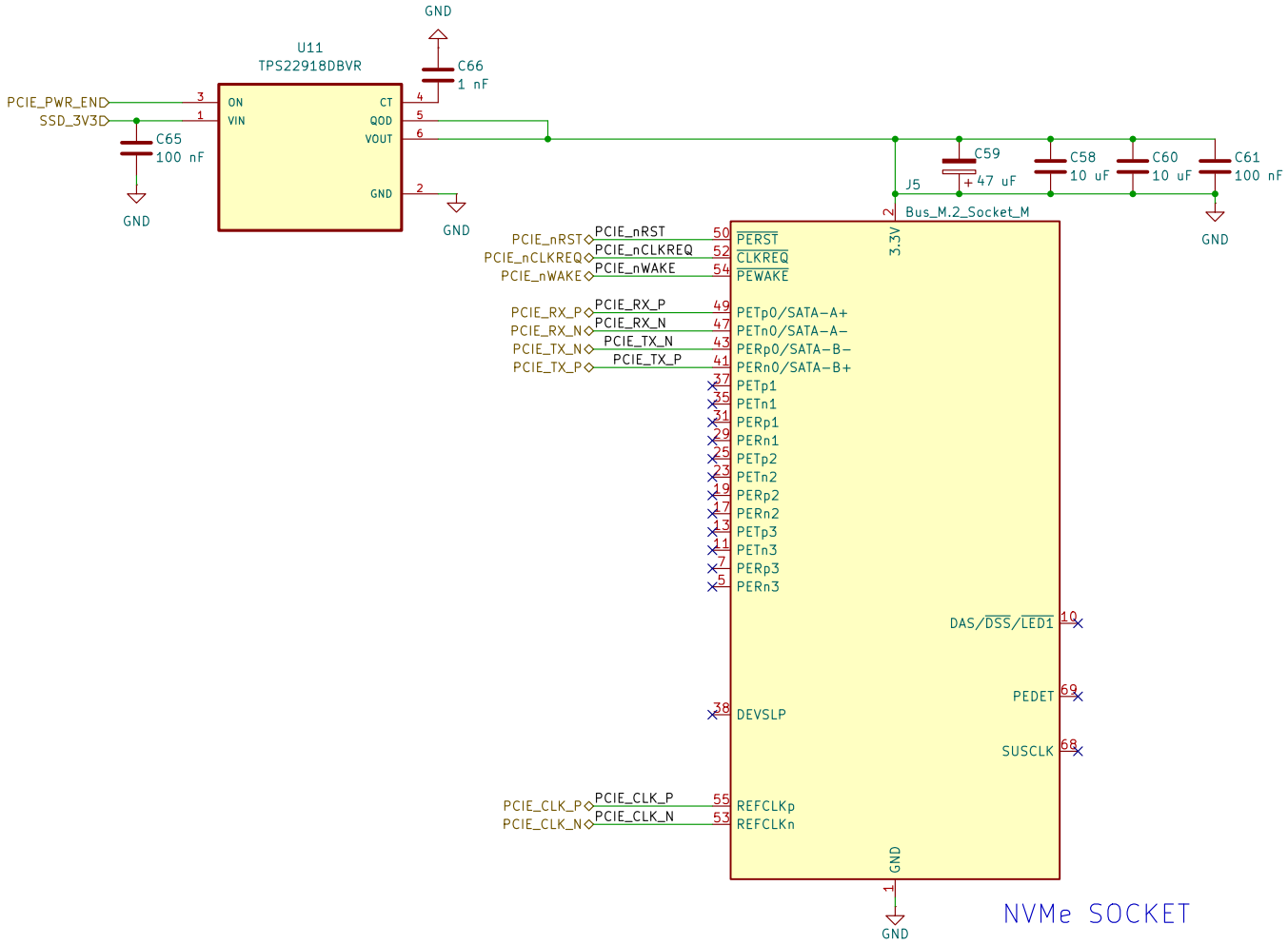

Sheet: /Main-Board/Ports/NVMe Socket/
File: nvme-socket.kicad_sch

Title:

Size: A4	Date:	**Rev:**
KiCad E.D.A. 9.0.7		Id: 9/9

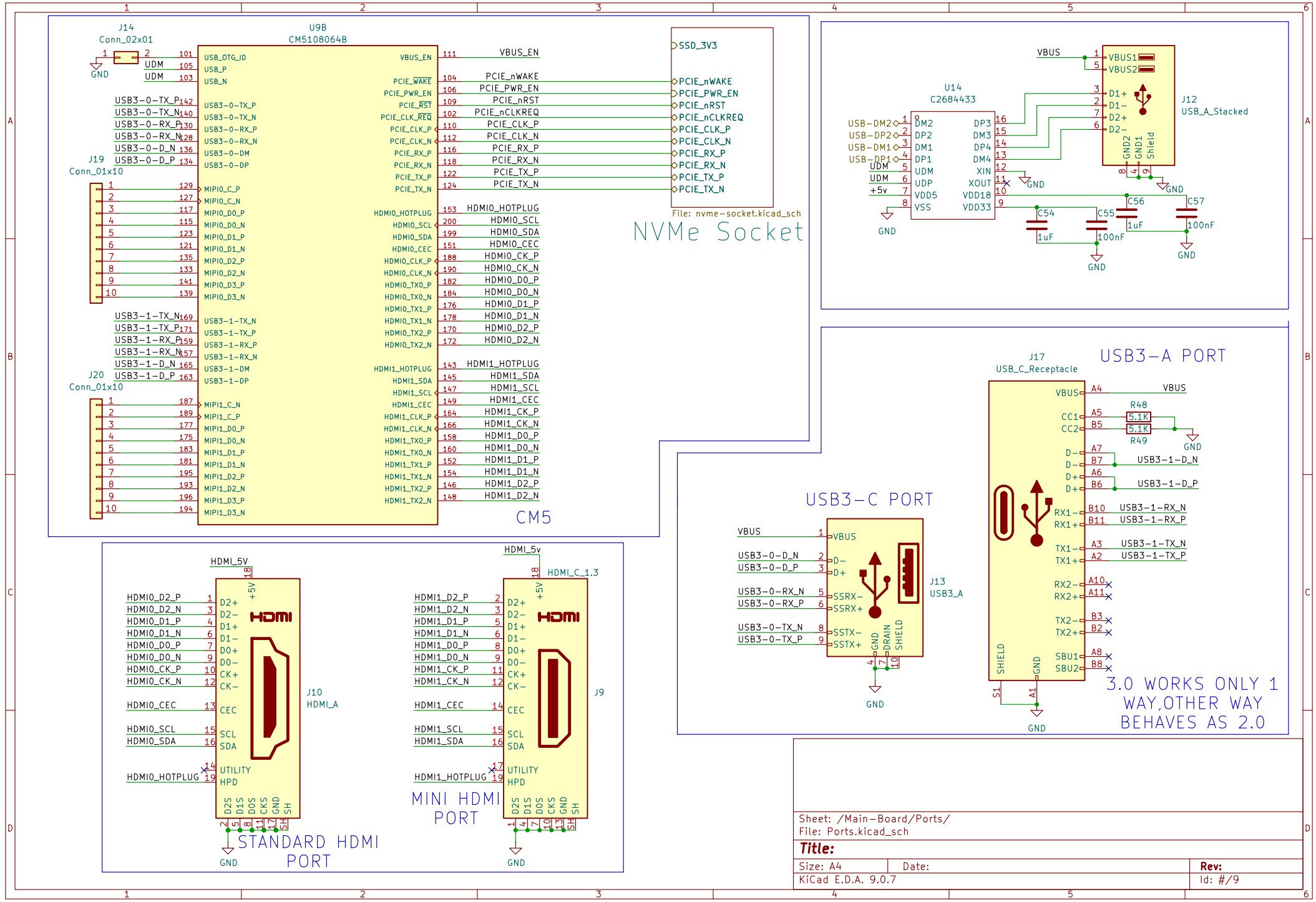

Sheet: /Main-Board/Ports/
File: Ports.kicad_sch

Title:

Size: A4	Date:	Rev:
KiCad E.D.A. 9.0.7		Id: #/9