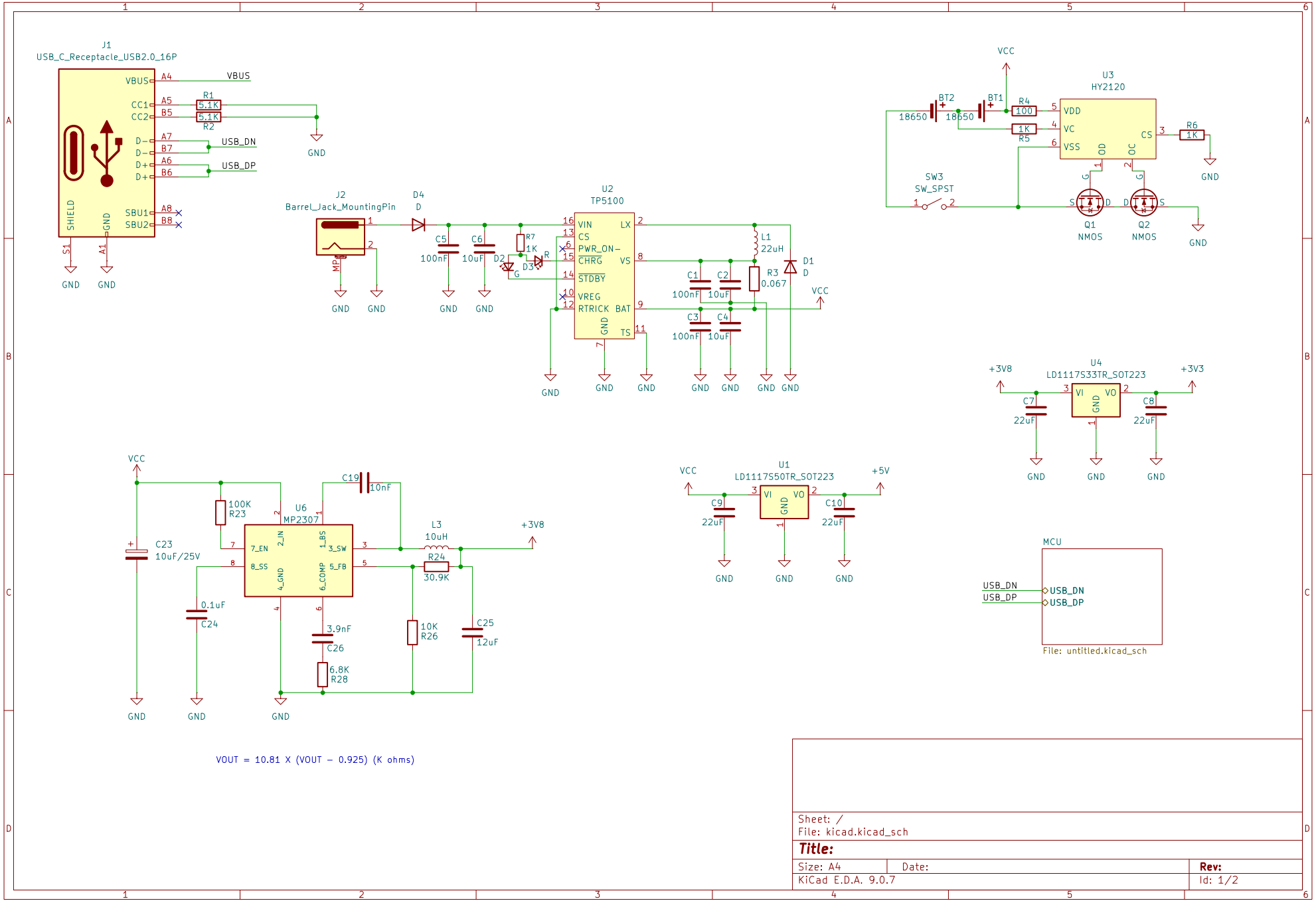
J1
USB_C_Receptacle_USB2.0_16P
VBUS
CC1
CC2
D-
D-
D+
D+
SHIELD
GND
SBU1
SBU2
A4
A5
B5
A7
B7
A6
B6
A8
B8
S1
A1
R1
5.1K
R2
5.1K
USB_DN
USB_DP
GND
J2
Barrel_Jack_MountingPin
MP
D4
D
C5
100nF
C6
10uF
R7
1K
D2
D3
R
G
U2
TP5100
VIN
CS
PWR_ON
CHRG
STDBY
VREG
RTRICK
GND
LX
VS
BAT
TS
C1
100nF
C2
10uF
C3
100nF
C4
10uF
L1
22uH
R3
0.067
D1
D
VCC
U3
HY2120
VDD
VC
VSS
OD
OC
CS
BT2
18650
BT1
18650
R4
100
R5
1K
R6
1K
SW3
SW_SPST
Q1
NMOS
Q2
NMOS
U4
LD1117S33TR_SOT223
VI
VO
GND
+3V8
+3V3
C7
22uF
C8
22uF
U1
LD1117S50TR_SOT223
+5V
C9
22uF
C10
22uF
U6
MP2307
7_EN
8_SS
2_IN
4_GND
1_BS
3_SW
5_FB
6_COMP
C19
10nF
100K
R23
C23
10uF/25V
0.1uF
C24
3.9nF
C26
6.8K
R28
L3
10uH
R24
30.9K
10K
R26
C25
12uF
MCU
USB_DN
USB_DP
File: untitled.kicad_sch
VOUT = 10.81 X (VOUT − 0.925) (K ohms)
Sheet: /
File: kicad.kicad_sch
Title:
Size: A4
Date:
Rev:
KiCad E.D.A. 9.0.7
Id: 1/2

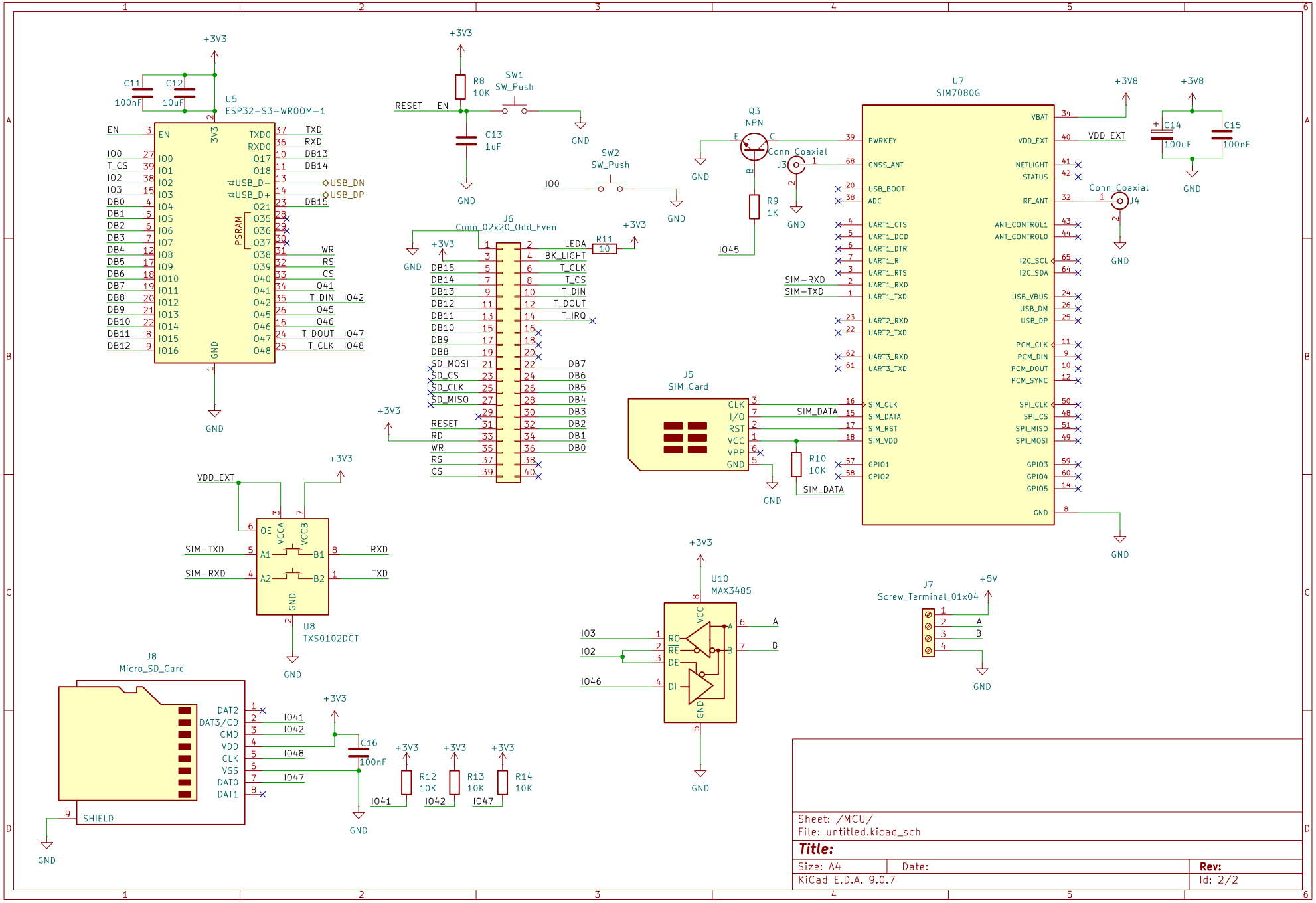

Sheet: /MCU/
File: untitled.kicad_sch

Title:

Size: A4	Date:	Rev:
KiCad E.D.A. 9.0.7		Id: 2/2