COMPUTER HARDWARE ESSENTIALS (23CSE102)

AIM : Controlling a Buzzer or LED Using an Active-Low IR Obstacle Sensor with Python on Raspberry Pi Zero 2 W (CO3).

Objective:

- Learn to interface a digital IR sensor with Raspberry Pi GPIO.
- Use Python to read a digital input and drive an output (LED or buzzer).
- Understand pull-up/pull-down resistors and safe wiring practices.

Q1: When obstacle is detected, turn on the led/ buzzer for 1 sec
(Pin for led/ buzzer connection: Pin 7 pin for IR sensor: GPIO 11)

Q2: When obstacle is detected ,turn OFF the led/ buzzer for 1 sec
(Pin for led/ buzzer connection: Pin 22 pin for IR sensor: Pin 24)

Q3: When obstacle is detected , blink the led/ buzzer 3 times
(Pin for led/ buzzer connection: Pin 15 pin for IR sensor: Pin 23)

Materials Needed:

• Raspberry Pi Zero 2 W	x 1
• Micro SD card (with OS)	x 1
• IR obstacle sensor (digital OUT) (TTL 3.3V compatible)	x 1
• LED /Buzzer	x 1
• 220-ohm resistor (or less than 2.2K)	x 1

- Breadboard
- Jumper wires
- USB cable Pi Zero 2 W
- Mini to HDMI adapter, Monitor
- Mouse & Keyboard

Circuit Diagram:

1. **Connections:**
   - The long leg of the LED (anode)/ Buzzer should be connected to **GPIO 23** (physical pin16)
   - The short leg (cathode) should be connected to the ground (GND) through a **220-ohm resistor**.
   - Output pin of IR sensor should be connect with **GPIO 26** (physical pin 37)

Procedure:

1. **Build the Circuit:**
2. **Open the python IDE & Type the code then save the programme**
3. **Run the code**

HARDWARE & IOT LAB

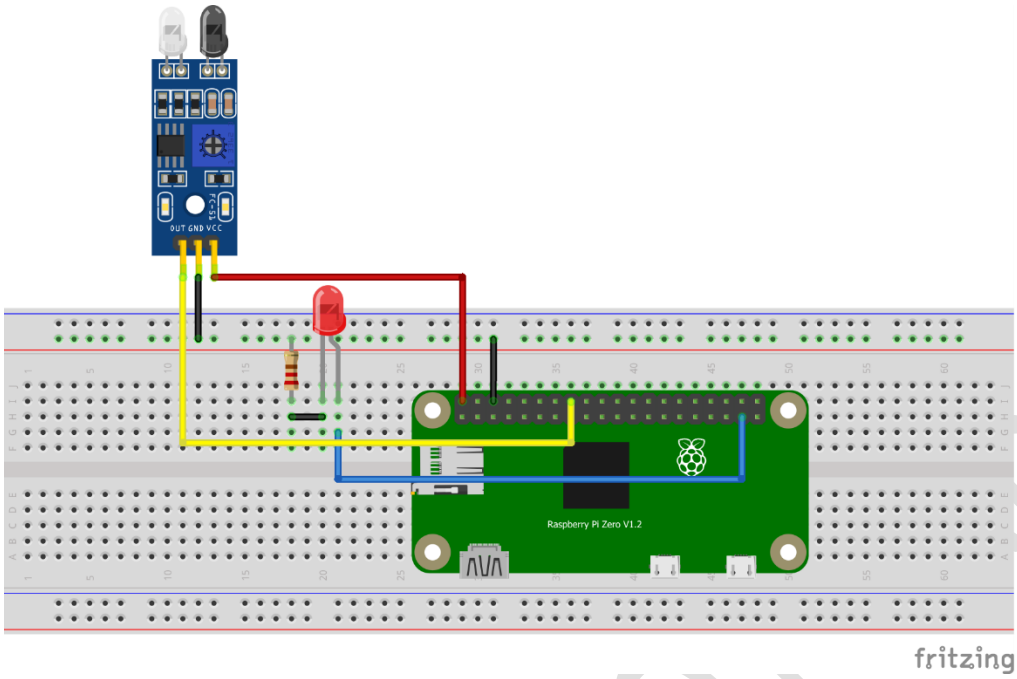

2. Write the Code:

```
import RPi.GPIO as GPIO
import time
# Use physical pin numbering
GPIO.setmode(GPIO.BOARD)
IR_PIN = 16   # IR sensor output pin
LED_PIN = 37  # LED pin
# Setup pins
GPIO.setup(IR_PIN, GPIO.IN)
GPIO.setup(LED_PIN, GPIO.OUT)
print("Obstacle detection started... Press Ctrl+C to exit")
try:
    while True:
        if GPIO.input(IR_PIN) == GPIO.LOW:   # Obstacle present
            GPIO.output(LED_PIN, GPIO.HIGH)
            print("Obstacle detected!")
        else:
            GPIO.output(LED_PIN, GPIO.LOW)
        time.sleep(0.1)

except KeyboardInterrupt:
    pass
finally:
    GPIO.cleanup()
    print("Program stopped.")
```

3. Testing & Observations

1. Place an object in front of the IR sensor. The LED should turn ON (or buzzer should sound) when the sensor output goes HIGH.
2. Remove the object — LED should turn OFF.
3. Record any false triggers, sensitivity adjustments (some modules have a potentiometer), and the measured reaction time.

Discussion Questions:
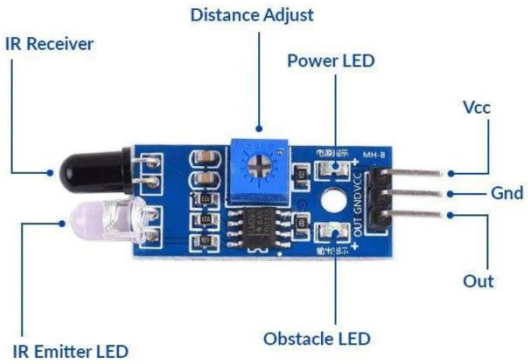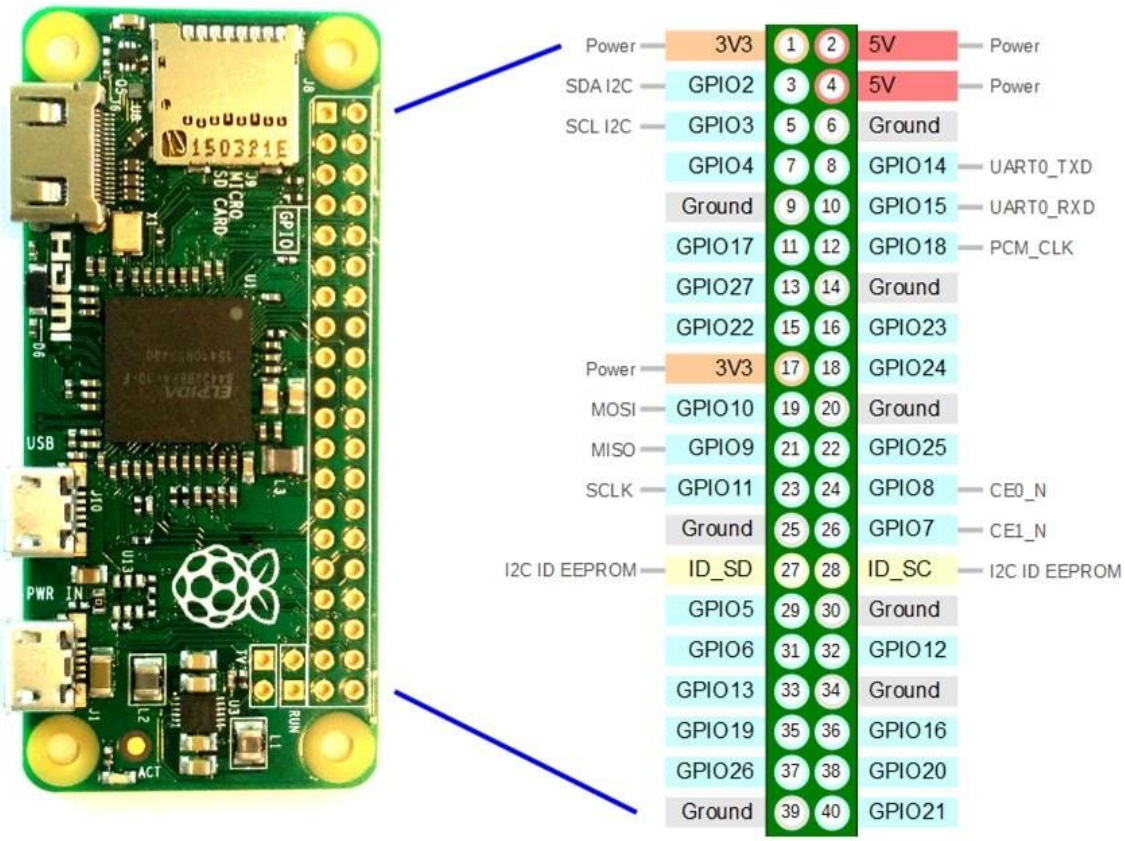
- Why do we use pull-up or pull-down resistors when reading digital inputs?