REVISION HISTORY				
ZONE	REV	DESCRIPTION	DATE	APPROVED

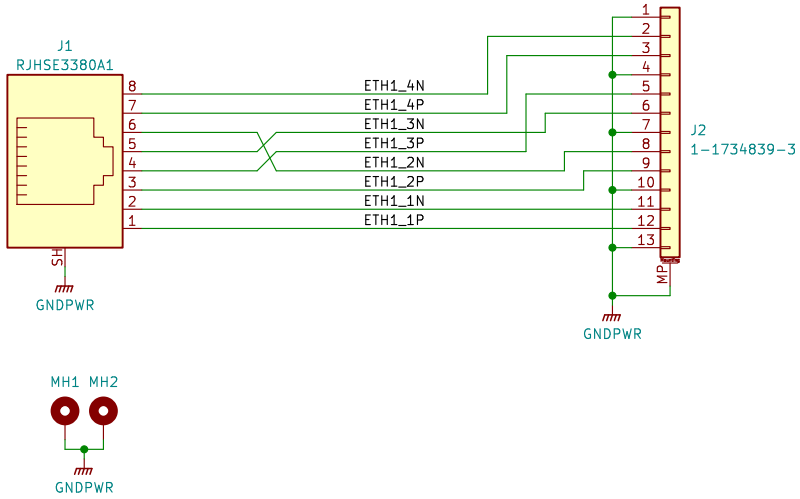

Bynet Testing Systems LTD

File:

P/N: BTS22314316A

Title: RJ45 Module

Size: A4	Date: 2023-07-21	Rev: 1.1
		Page: 1/1