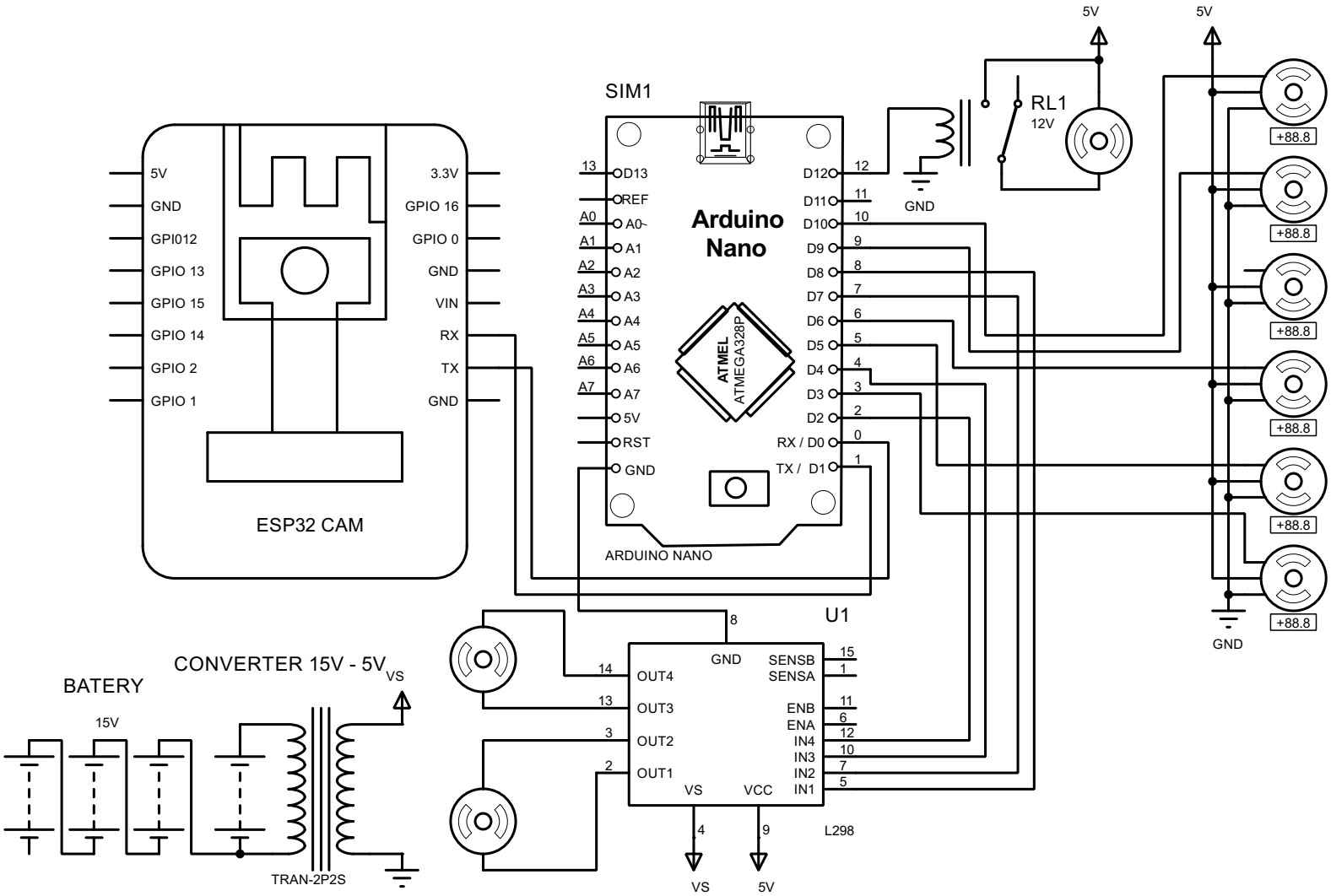

FILE NAME: New Project.pdsprj	DATE: 23/10/2023
DESIGN TITLE: New Project.pdsprj	
PATH: D:\solidworks\peroject\Indriayu\proteus\New Project.pdsprj	PAGE: 1 of 1
BY: @AUTHOR REV:@REV	TIME: 23:01:35
BOARD: @BOARD	