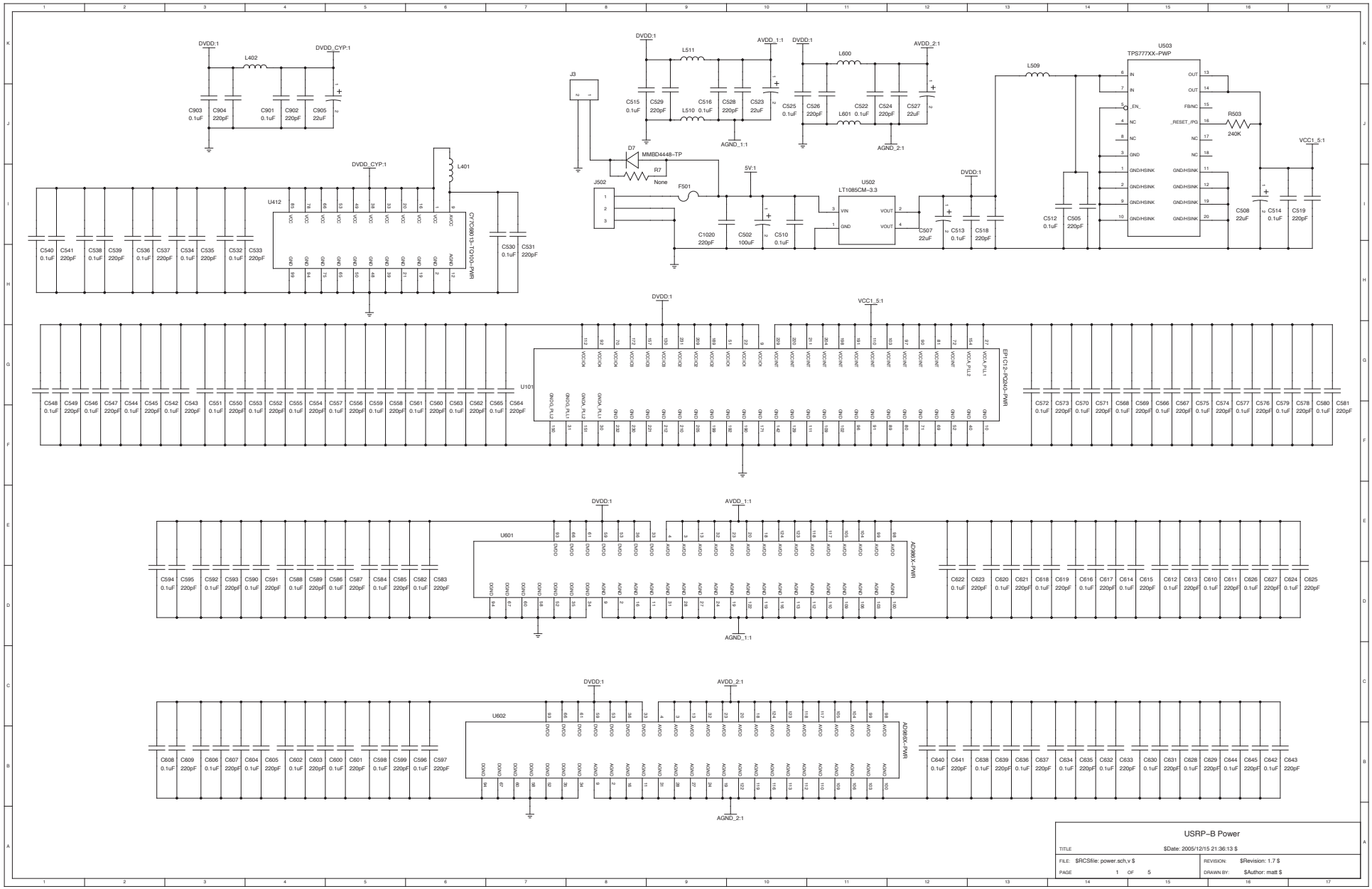

©2012 Ettus Research. All rights reserved.

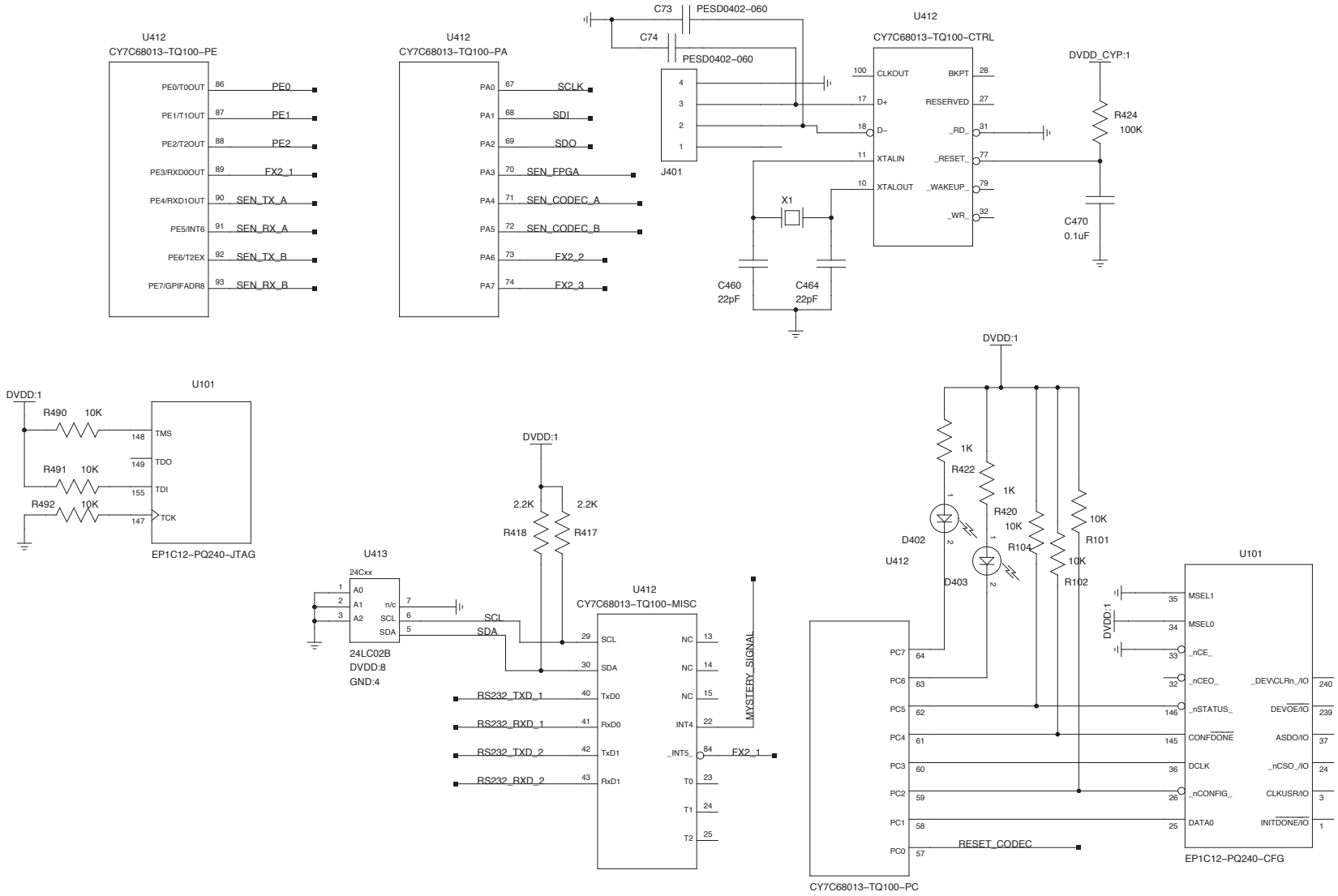

TITLE	USRP–B FPGA/FX2 Interface
	$Date: 2005/12/15 20:34:07 $
FILE: $RCSfile: interface.sch,v $	REVISION: $Revision: 1.5 $
PAGE 2 OF 5	DRAWN BY: $Author: matt $

©2012 Ettus Research. All rights reserved.

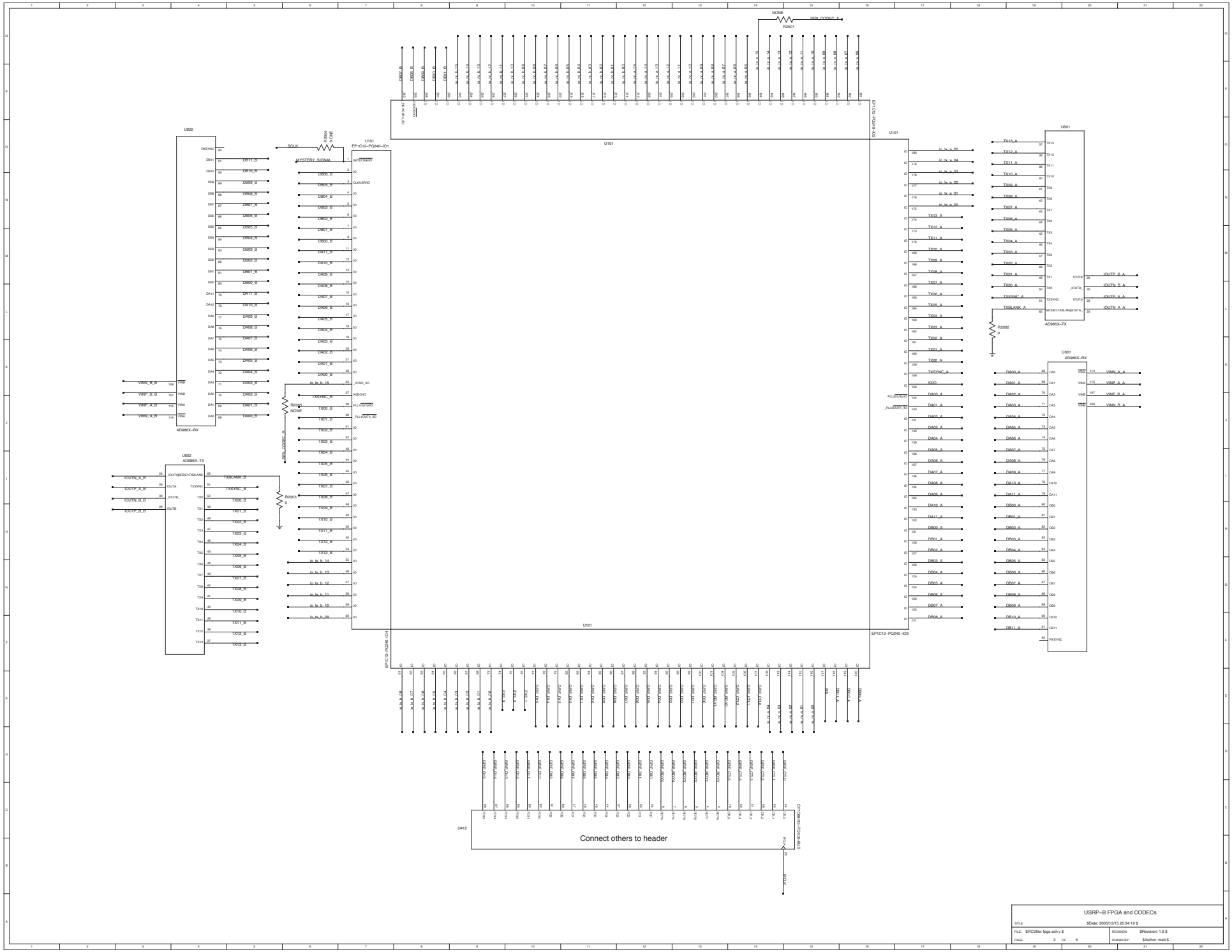

USRP–B FPGA and CODECs

TITLE: $Date: 2005/12/15 20:34:19 $

FILE: $RCSfile: fpga.sch,v $ | REVISION: $Revision: 1.6 $

PAGE 3 OF 5 | DRAWN BY: $Author: matt $

©2012 Ettus Research. All rights reserved.

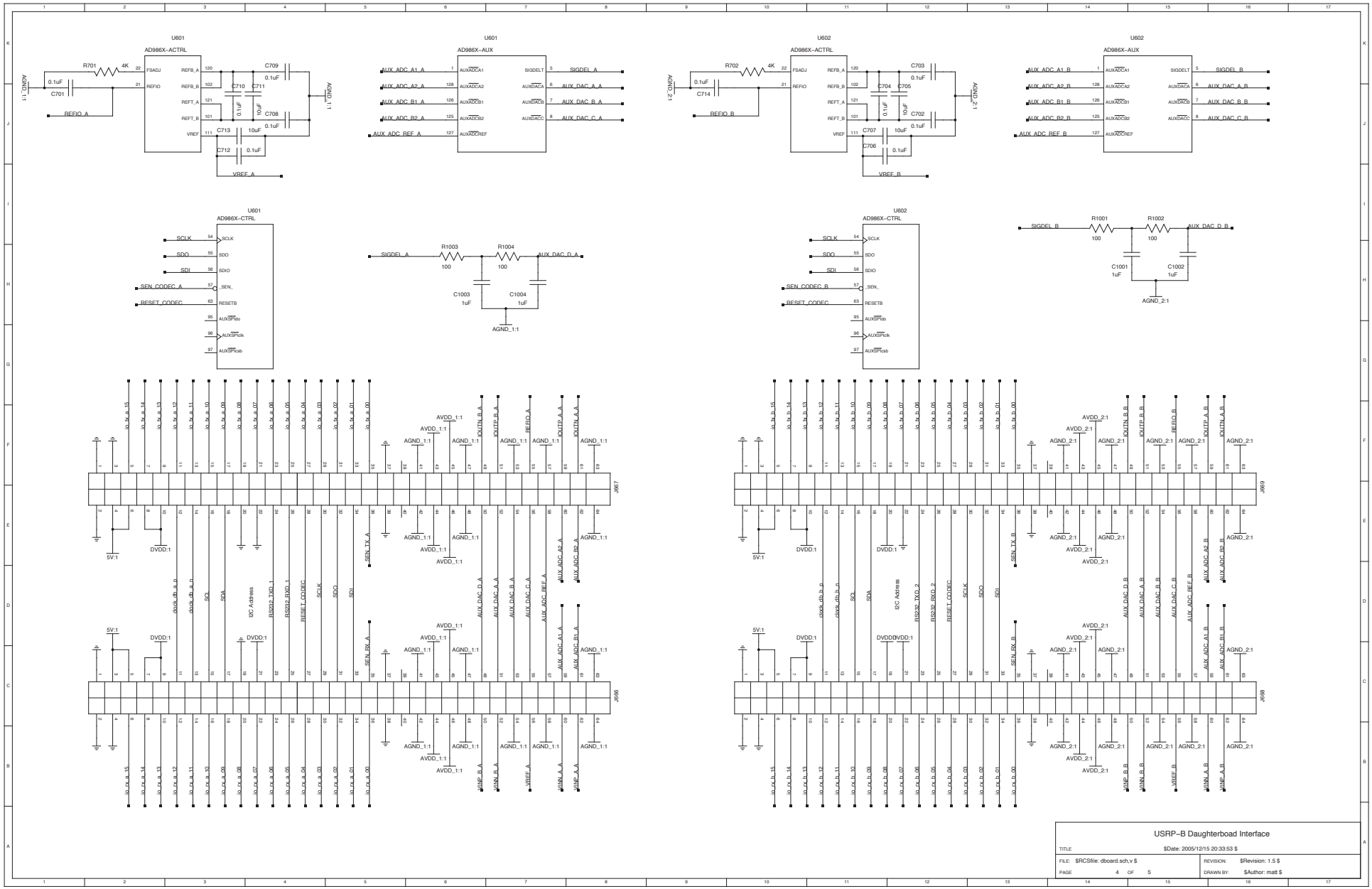

©2012 Ettus Research. All rights reserved.

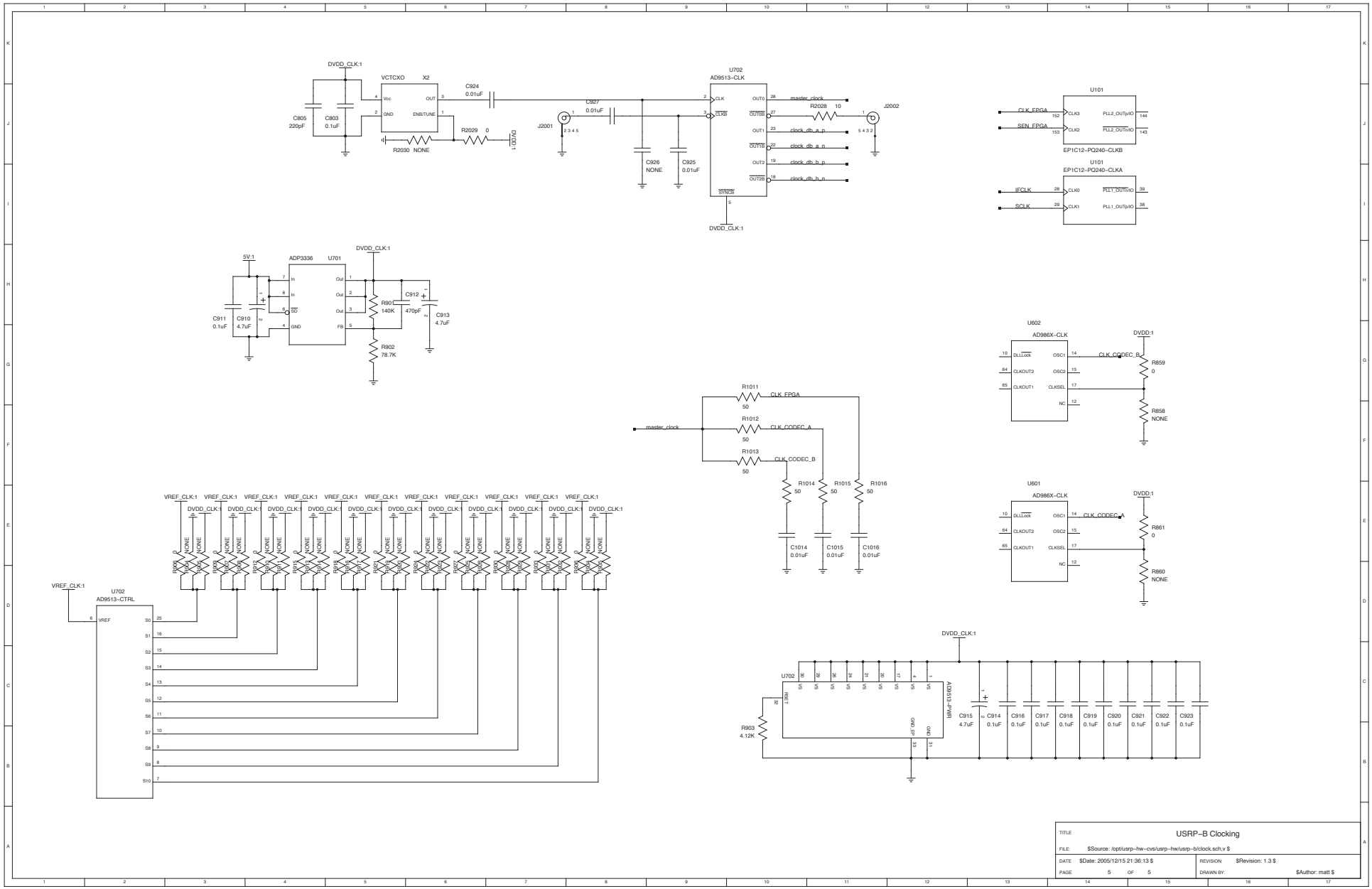

TITLE	USRP–B Clocking
FILE:	$Source: /opt/usrp–hw–cvs/usrp–hw/usrp–b/clock.sch,v $
DATE	$Date: 2005/12/15 21:36:13 $
REVISION:	$Revision: 1.3 $
PAGE	5 OF 5
DRAWN BY:	$Author: matt $

©2012 Ettus Research. All rights reserved.