Course Documentation

The following section demonstrates various course documents I've developed for classes I have taught, includinging: (1) syllabi, (2) lesson plans, (3) instructional resources of various media formats (including instructional videos to supplement classroom learning)

Lesson Plan

Masterclass: Introduction to Laser Cutting & Digital Fabrication

Target Audience: High School (Grades 9–12) or Early Undergraduate
Duration: 2–3 hours (can be modularized)
Prerequisites: Basic computer literacy

Essential Question

How can digital design tools translate into precise, real-world physical objects?

Learning Objectives

By the end of this session, students will be able to:

- Explain how a CO_2 laser cutter functions
- Identify appropriate materials for laser cutting vs. engraving
- Prepare vector files for laser cutting using correct line weights and color coding
- Apply kerf compensation and tolerance considerations in a design
- Safely operate a laser cutter under supervision
- Evaluate design outcomes and iterate based on material behavior

---

Standards Alignment

- **CSTA 3A-AP-17:** Systematically test and refine computational artifacts
- **NGSS HS-ETS1-2:** Design solutions to complex real-world problems
- **ISTE 4d:** Students exhibit a tolerance for ambiguity and iterate to improve solutions

---

Materials

- Laser cutter (e.g., Glowforge, Epilog, Retina Engrave 3.0)
- 1/8” plywood, acrylic, or cardboard
- Vector software (Adobe Illustrator / Inkscape / Fusion 360 export)
- Safety glasses
- Sample cut artifacts (press-fit box, engraved panel, parametric joint sample)

Lesson Flow

---

1. Hook (15 minutes)

Show & Tell

Display 3–5 fabricated objects:

- Press-fit construction kit
- Living hinge example
- Engraved typography panel
- Mechanical linkage cut in plywood

Ask:

- “What do you think determined whether this worked or failed?”
- “Where do you think the precision comes from?”

Transition into how digital precision meets material reality.

---

2. Concept Instruction (30–40 minutes)

A. How a Laser Cutter Works

- CO_2 laser tube
- Mirrors & lens focusing
- Vector vs raster modes
- Power, speed, frequency

B. Material Science Basics

- Wood vs acrylic behavior
- Flame risk and ventilation
- Why PVC is prohibited

C. Kerf & Tolerances

- Demonstrate kerf with calipers
- Why a 0.125" slot doesn’t equal a 0.125" press-fit
- Parametric adjustment concept

Use physical samples to illustrate each concept.

---

3. Guided Design Demo (30 minutes)

Live demonstration:

- Create a simple press-fit joint
- Set correct line weights (hairline / 0.001 pt)
- Color-code cut vs engrave
- Export properly
- Load into laser software
- Set power/speed settings
- Frame job
- Execute cut

Model verbal thinking:

- “I’m checking alignment.”
- “I’m adjusting power because plywood density varies.”

---

4. Hands-On Activity (45–60 minutes)

Student Challenge:

Design a small modular object using press-fit joints.

Options:

- Phone stand
- Modular sculpture

- Desk organizer
- Mechanical linkage prototype

Students must:

- Sketch first
- Build vector file
- Account for kerf
- Fabricate
- Test fit

Instructor circulates and provides feedback.

---

5. Reflection & Critique (20 minutes)

Students answer:

- What worked as expected?
- Where did tolerance fail?
- How would you adjust your design?
- What surprised you about material behavior?

Short peer share session.

Assessment

Formative

- Instructor observation during design
- File setup accuracy
- Correct line weights & color coding

Summative

- Functional fabricated object
- Reflection quality
- Demonstrated understanding of kerf & material properties

Differentiation

For Beginners

- Provide template starter file
- Offer pre-measured kerf values

For Advanced Students

- Introduce parametric modeling
- Challenge: Create an adjustable-fit joint
- Explore living hinges

Extension Options

- Integrate Arduino components into fabricated housing
- Develop packaging prototype
- Explore sustainable material alternatives
- Introduce batch production & nesting for efficiency

Safety & Risk Management

- Mandatory material approval before cutting
- Fire watch policy
- Proper ventilation
- Never leave machine unattended
- Clear emergency stop procedures

Instructional Design Approach

This masterclass uses:

- Constructivism (learning through making)
- Project-Based Learning (artifact creation)
- Socratic questioning (guided troubleshooting)
- Differentiated challenges
- Backward design (artifact demonstrates understanding)

SLOT CARS CONTROLLER BOX ONE SHEET

PURPOSE

The purpose of this document is to act as a one-page breakdown of the Slot Cars Controller Box. This document will include a project rendering and circuit diagram, an electrical flow breakdown, and actual images of the final Controller Box to demonstrate how the engineering theory described in this document was applied.

RENDERING AND ELECTRICAL FLOW

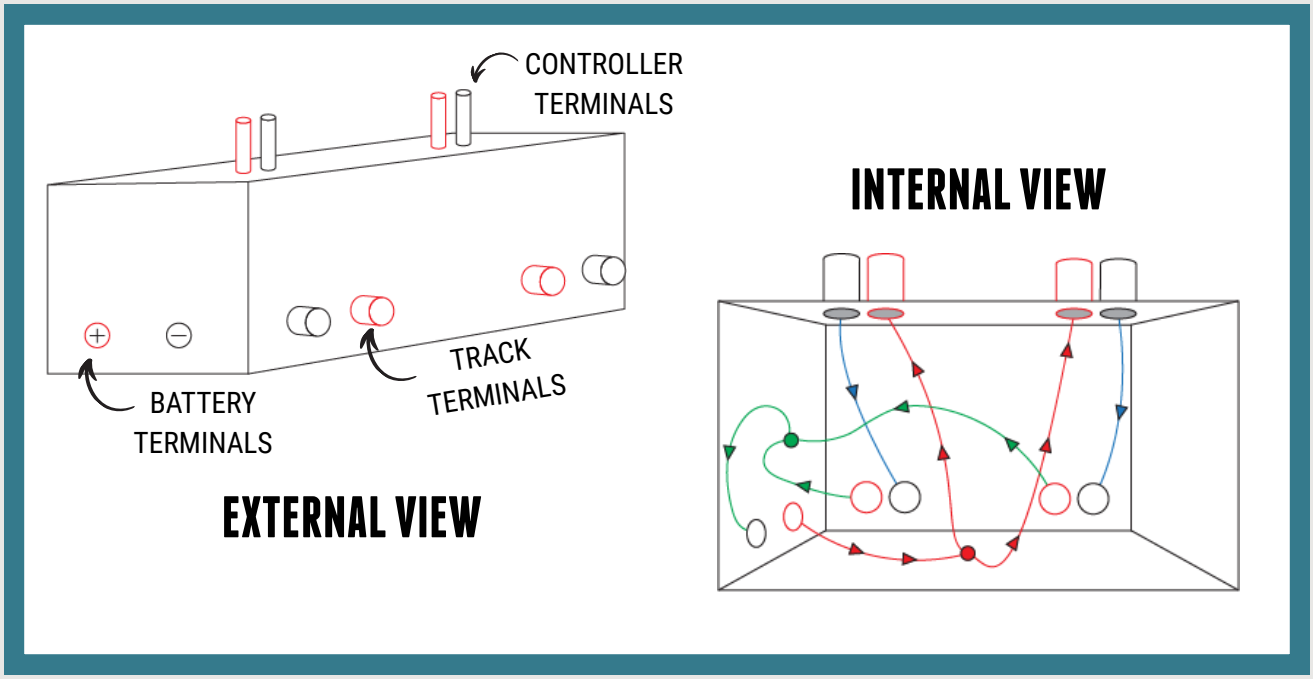

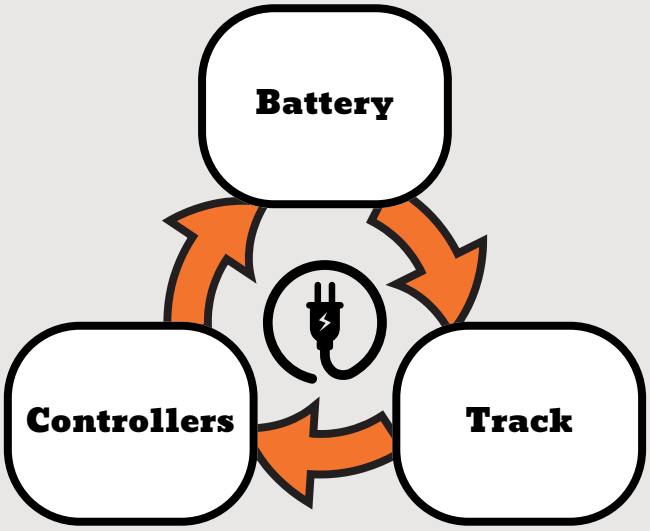

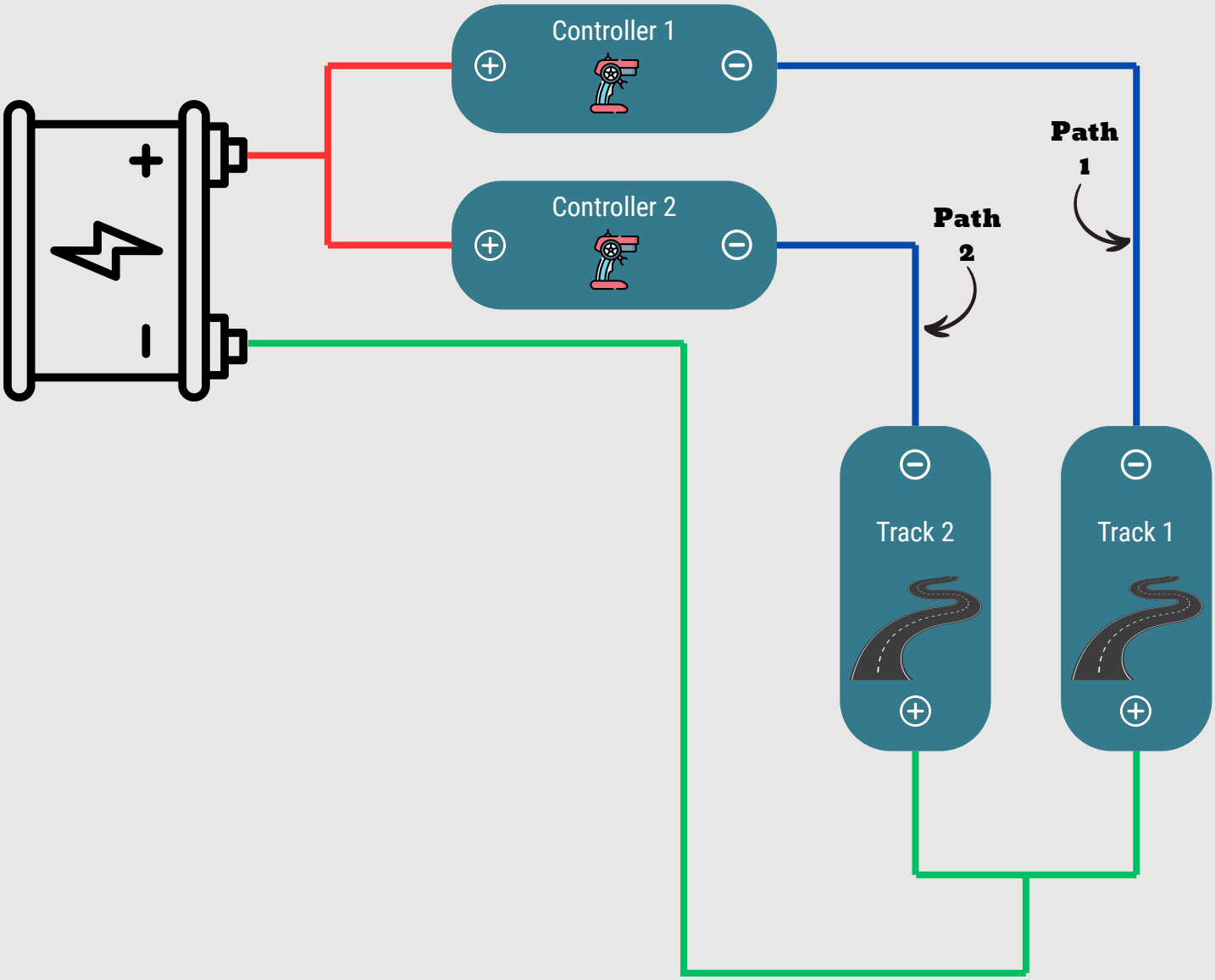

SUMMARY

In this control box, there are three points of interest - the battery terminals, the controller terminals, and the track terminals. Electricity begins by flowing in from the positive battery terminal, and then splits at a junction to flow into each positive controller terminal (allowing for two, independent circuits that each controller can tap into). When clipped on, each controller completes it’s respective circuit, allowing the electricity flow through the negative controller terminals and into the corresponding positive track terminals. From there, the track is electrified and returns the current back through the negative track terminals, and both of these current lines recombine at another junction, finally flowing back to the negative terminal of the battery.

This circuit relies creating two smaller, parallel circuits within one larger network - Controller 1 and Track 1 operate independently of Controller 2 and Track 2, and their wiring corresponds to each other (i.e. Controller 1's wiring will only connect to Track 1's terminals, and same with its counterpart.)

Instructional Materials

As an educator and curriculum developer, I have produced bountiful supplemental educational tools in the form of Industrial Design, Fabrication, and Engineering tutorials. Among the chief publicly available resources are the following:

The Fabrication 2.0 Handbook: Making in the Classroom

PD Pamphlet (2).pdf

This is a comprehensive guide to setup, maintenance, tool safety, classroom management, and project ideas for the public school teachers of LA County, to prepare them for a multi-district rollout of new fabrication devices, including Bambu 3D Printers and FSL Laser Cutters. I developed this as a supplement of a lecture series I gave on 3D Printers and Laser Cutters, as part of The Two Bit Circus Foundation.

Laser Cutting 101

https://www.youtube.com/watch?v=BxX-kLu1_gE

In addition to the lecture series and handbook I developed, I also lesson-planned, shot, starred in, and edited a 42 minute recap lecture to act as a resource for the teachers who wanted to refresh their knowledge of Laser Cutting. In the tutorial, I go through the basic principles of Laser Cutting, Safety Guidance, Classroom Management Strategies, and a complete a 0–to–1 demonstration of how to prep a file and send it over to a FSL Laser Cutter.

ART BOT

Engineering

TWO BIT CIRCUS FOUNDATION

Lesson Guide

Objective:

Students will be challenged to learn what a robot is and to build from recycled materials, a robot that can draw.

Quick Reminders

- Not all robots will look the same. That is a good thing!
- Support the students through asking thought provoking questions - but don't give away answers.
- A healthy level of frustration means the project is working as intended.
  - Encourage students to continue, persevere and overcome failures.
  - It is okay to assist students at varying levels depending on age, motor skills and efficacy. However, it is also OK to let students struggle in the learning process and only support through guidance, and reassurance.
- If a certain material runs out, that means time to pivot and challenge students.
- It is OK if not all students have the same building materials.

Pre-Class Set Up:

1. Set up a section of the room that is for material selection.
2. Set up a section of the room dedicated to tools (somewhere easy to monitor & support)
3. Think strategically about the lesson, the room, and where you will deliver each aspect of the lesson.
4. Think about what you will be checking for during the lesson, try and anticipate where students will struggle, where they will need support, and how you plan to offer that support.
5. When time, provide students with the materials for completing the circuit.
6. They won't need any other materials on their desks at this time.
7. Use student volunteers to help pass out the materials.

Lesson Guide

Welcome Students and Introduce Yourself (3 Minutes)

1. "Hello my name is _____ and this is _____, who will be helping us.
2. "In order to do today's activity, we need to make sure that we are able to hear instructions clearly, and are being safe. When I want to get your attention I will do _____." (Introduce your attention getter).
3. "When I do _____ (the attention getter) I would like all of you to put all the materials down, lower our volume all the way down and look up here."
4. "Let's give it a try" (Practice your attention getter)

Recall that the point of this endeavor is to properly manage the classroom, and create a collaborative environment. It ought to be done in a friendly and community building manner and not authoritatively(me vs you).

Gather Students Around to Read "The Artbot Story" (7 Minutes)

1. If there is a carpeted area, or area to group students, you can transition them to that area for story time. Otherwise, read to students, and use the space of the room as part of your engagement.
2. **(Data Collection)** Make the questions sound like a part of the activity and fun - not a test; students shouldn't be observant that data is being collected. Secondary facilitator records responses.
   a. Ask students to raise their hands if they think they can build a robot? (Secondary facilitators in the back of the room should quickly tally the hands and record the data on the pre survey form).
   b. Ask students "what makes a machine a robot?" "Raise your hand if you think: "Having hands and feet," "Needs to be made of metal," " Does something automatically/by itself"
   c. Reassure students that it is ok if they do not know what a robot is and we are here to learn about what makes a robot.

Lesson Guide

Gather Students Around to Read "The Artbot Story"

1. Walk around the room as you read. Find strategic locations to make points in the story clear, use voice to highlight, exaggerate and excite at specific times in the story.
    a. **(Data Collection)** Ask students about the story as a whole group.
        i. "What makes Squiggle a robot?" Raise your hand if its because:
            1. "He has hands and feet"
            2. "He is made of metal"
            3. "He can make art by himself?"
        ii. "What is it that Squiggle can do? (Draw).
2. Tell students that today they will get an opportunity to build an Artbot that can shake and move about to draw and create patterns on paper like Squiggle!
3. That the point of this endeavor is to properly manage the classroom, and create a collaborative environment. It ought to be done in a friendly and community building manner and not authoritatively(me vs you).

Getting Motor Max to Spin (10 Minutes)

1. Pass out the required materials for the ArtBot circuit
    a. Battery holder, batteries, extension wires, motor.
2. Challenge the class to see if they can make their motor turn on/start spinning.
    a. "Hmmm, I remember from the story that we need to get a motor to spin; like the one Squiggle the ArtBot has".
    b. "Do you all remember the name of the motor from the story?"
    c. Get students' answers - "Motor Max" was his name.
    d. "I will give you 5 minutes to experiment and let us see if you can get "Motor Max" to spin.
3. Facilitate and support students' efforts to get the motor to spin.
    a. Remember our ways to support students and allow them to explore.
    b. Remind students of time, for example, "we have 2 minutes left"

Lesson Guide

Getting Motor Max to Spin

4. When time is up, use your attention getter. REMEMBER to exercise wait time & wait until you have the room to give next directions.
    a. Ask students to unplug Motor Max to save his energy.
    b. Monitor and check that all students have unplugged their motors.

Making Their Robot (20 Minutes)

1. Transition students into building their Artbot body.
    a. "Class we now need to find what recycled material we want to use for our Artbot". You can choose to remind students about the character Cupbert, but tell them they don't have to choose a cup design, it can be any material from the bins that they think will be a good fit for their bot.
    b. Have students line up, or call them up table by table to walk the material area and select their main body.
    c. The supporting facilitator can circle around and pass out a handful of markers to each area for students to use as legs for their bot.
2. Once all students have their material body, support students in working to attach their legs to their bot.
    a. Do they want 2,3,4 legs? They can experiment with the number of legs to balance their bot and how to attach them.
    b. Facilitate the group as they are attaching their robot legs.
    c. Students may decide to change their body at this time if there original material and idea doesn't work out for them.
3. Students decide how they will attach the 'Motor Max' circuit.

Lesson Guide

CLEANING UP + ART DRAWING(15 MINUTES)

1. Transition from making robots to directing students how to clean up. Use your attention getter to settle everyone in.
2. Once you have the attention of the room,ask students to clean up
3. Give specific instructions on how to clean up (below are some examples, physically modeling what you are asking also helps)
    a. “Please collect all the trash, calmly walk over to the trash can and throw it away.”
    b. “Collect unused materials, bring them to the material area and match them with the materials in each container.”
4. Students practice drawing different designs using their bots on paper.
5. Play ‘Simon Says’ to **Collect Data** for the final questionnaire. Topic can be done in any order. You can even add more to lighten the mood (but make sure you get the data for these topics!)

ART BOT
ENGINEERING

TWO BIT CIRCUS FOUNDATION

DATA COLLECTION

PRE-ACTIVITY QUESTIONAIIRE

OF STUDENTS / TOTAL STUDENTS

DO YOU THINK YOU CAN BUILD A ROBOT? — RESPONSES

(A) YES

(B) NO

POST-ACTIVITY QUESTIONAIIRE

DO YOU THINK YOU CAN BUILD A ROBOT? — RESPONSES

(A) YES

(B) NO

SIMON SAYS! . . . _____(ACTION) IF YOU HAD FUN DOING _____ TODAY!

Post-Activity Engagement

	Recess	Math	Talking to Your Friends	Science	Lunch	Today's Activity
Tally						

DATA COLLECTION

PRE-STORY QUESTIONAIIRE

OF STUDENTS / TOTAL STUDENTS

WHAT MAKES A MACHINE A ROBOT?

RESPONSES

(A) Having Hands and Feet

(B) Needs to be Made of Metal

(C) Can Do Something Automatically/By Itself

POST-STORY QUESTIONAIIRE

WHAT MAKES SQUIGGLE A ROBOT?

RESPONSES

(A) Having Hands and Feet

(B) He is Made of Metal?

(C) He Can Make Art By Himself

ArtBot Activity: Learning Outcomes Summary

Quantitative Outcomes

- Pre-activity: 35% of students said they could build a robot
- Post-activity: 95% of students said they could build a robot
- Common misconceptions addressed:
  - Robots need to have hands/feet
  - Robots must be made of metal

Qualitative Insights

- "I didn’t think a cup could make art!"
- "We made Squiggle dance. That was my favorite part!"
- "Next time, I want to make one that draws stars."

Instructor Reflections

- Students showed strong gains in collaborative problem solving.
- Learning was highly differentiated through open-ended construction.
- SEL and engagement indicators were high across all age groups.

Purpose

The purpose of these rubrics are to assess the overall engagement of students while working throughout our programs.

Measured Criteria

In order to assess engagement we will use classroom observations to measure in the following categories:

Collaboration

Two or more people are working together to achieve a common goal.

Communication

The exchange of information and ideas.

Creative Thinking

The generation of new ideas, processes, or solutions.

Critical Thinking

The process of analyzing information and drawing conclusions.

Why Are We Measuring These Categories?

Collaboration	Provides insight to students' active participation. (involvement with activities)
Communication	Provides insight into students' ability to share their understanding of both creative thinking and critical thinking around educational content.
Creative Thinking	Provides insight into the active thinking process of students to solve problems as related to educational content.
Critical Thinking	Provides insight into students' ability to process, analyze and draw conclusions around subject matter.