ASHWAN KADAM — PORTFOLIO

# Instructional Design + Teaching

Curriculum development, lesson design, and facilitation materials spanning K-12 and university contexts. Includes syllabi, lesson plans, instructional resources, and student outcome documentation.

**CONTEXTS**

K-12 Public School
University / STEM Bridge
Teacher Professional Dev.

**ROLES**

Instructor
Curriculum Designer
Instructional Resource Author

**INSTITUTIONS**

UC Berkeley
LAUSD / Two Bit Circus Fdn.
T-PREP / Maker Design Studio


ashwan_kadam@berkeley.edu

# Laser Cutting Masterclass

Introduction to Digital Fabrication for K-12 Educators

| Facilitator | Audience | Duration | Prerequisites |
|---|---|---|---|
| Ashwan Kadam | LAUSD Educators, Grades 9-12 | 2-3 Hours | Basic computer literacy |

## About This Guide

This guide is the companion reference for the Laser Cutting Masterclass, a professional development seminar developed for LAUSD educators. It is designed to be used both during the session and taken home as a classroom reference. The session moves from direct instruction through live demonstration to hands-on fabrication, giving participants the foundational knowledge and confidence to introduce laser cutting into their own curriculum.

No prior experience with laser cutters or vector software is required. Participants will leave with a fabricated object they designed themselves, an understanding of the design-to-cut workflow, and a set of ready-to-use classroom project ideas.

## Session Overview

| Phase | Activity | Time |
|---|---|---|
| 1 | Hook: Show and Tell with fabricated artifacts | 15 min |
| 2 | Concept Instruction: How laser cutters work | 30-40 min |
| 3 | Guided Design Demo: Live file-to-cut walkthrough | 30 min |
| 4 | Hands-On Activity: Press-fit design challenge | 45-60 min |
| 5 | Reflection and Critique | 20 min |

ABOUT THIS SEMINAR

## Purpose, Audience and Essential Question

This masterclass was developed as a professional development seminar for LAUSD educators preparing to integrate digital fabrication tools into their classrooms. It is not a general introduction to laser cutting for hobbyists or engineers. The curriculum is designed around the specific context of a K-12 classroom: shared machines, mixed skill levels, time constraints, and the need to connect fabrication practice to curriculum standards.

- Audience: High school educators (Grades 9-12) across LAUSD, primarily teaching in design, engineering, STEM, and arts contexts
- Format: In-person professional development seminar, 2-3 hours, modular so individual sections can be taught independently
- Prior knowledge assumed: Basic computer literacy. No prior fabrication or vector design experience required.

### Essential Question

How can digital design tools translate into precise, real-world physical objects, and what do educators need to understand about that process to use it confidently in a classroom?

### Learning Objectives

By the end of this session, participants will be able to:

| | Participants will be able to... |
|---|---|
| 1 | Explain how a CO2 laser cutter functions, including the role of the laser tube, mirrors, lens, and the difference between vector and raster modes |
| 2 | Identify appropriate materials for laser cutting and engraving, and explain why certain materials (e.g. PVC) are prohibited |
| 3 | Prepare a vector file for laser cutting using correct line weights and color coding in Illustrator, Inkscape, or Fusion 360 |
| 4 | Apply kerf compensation and tolerance considerations to a design before sending it to the cutter |
| 5 | Safely operate a laser cutter under supervision, including fire watch, ventilation procedures, and emergency stop |
| 6 | Evaluate design outcomes and iterate based on material behavior and fit testing |

## Standards Alignment

| Standard | Connection |
|---|---|
| **CSTA 3A-AP-17** | Systematically test and refine computational artifacts. Applied here through iterative design and kerf calibration. |
| **NGSS HS-ETS1-2** | Design solutions to complex real-world problems. Participants apply material constraints to achieve precise fit. |
| **ISTE 4d** | Students exhibit a tolerance for ambiguity and iterate to improve solutions. Embedded in the hands-on design challenge. |

SECTION 1

# Materials and Equipment

| Equipment | Materials | Software |
|---|---|---|
| Laser cutter (Glowforge, Epilog, or FSL RetinaEngrave 3.0) Safety glasses, one pair per participant Calipers for kerf measurement | 1/8" plywood (primary cutting material) Acrylic sheet (for engraving demo) Cardboard (for low-stakes prototyping) | Adobe Illustrator or Inkscape (free) Fusion 360 export LightBurn, RetinaEngrave, or Glowforge interface |

Also prepare 4-5 fabricated reference samples to display during the Hook phase: a press-fit construction kit, a living hinge panel, an engraved typography example, and a mechanical linkage cut from plywood.

SECTION 2

# Session Flow

## Phase 1 — Hook

15 MINUTES

Open by placing 4-5 fabricated objects on a table and letting participants handle them before the session formally begins. The goal is immediate curiosity about how these objects were made, especially the ones that seem impossible to have been cut from flat sheet material.

### Objects to display:

- Press-fit construction kit, assembled and with one piece removed to show the joint
- Living hinge panel, demonstrate the flexibility
- Engraved typography panel, showing the contrast between cut and raster
- Mechanical linkage showing that moving parts can come from one flat sheet

**DISCUSSION PROMPTS**

Ask: "What do you think determined whether this worked or failed?"

Follow with: "Where do you think the precision comes from?"

Allow 3-4 minutes of open discussion before transitioning. Do not answer the questions yet. Let the curiosity carry over into the concept instruction.

## Phase 2 — Concept Instruction

30-40 MINUTES

Cover three conceptual areas in sequence. Use physical samples to ground each one. Avoid going deeper than participants need. The goal is classroom confidence, not engineering mastery.

### A. How a Laser Cutter Works

- CO2 laser tube generates the beam; mirrors route it; the lens focuses it to a point on the material
- Vector mode follows a path to cut or score. Raster mode scans line by line to engrave.
- Three control variables: power, speed, and frequency. These are adjusted per material.

> **ANALOGY**
>
> Vector mode is drawing with a pen. Raster mode is printing with an inkjet. Same machine, different behavior based on how the file is set up.

### B. Material Science Basics

- Wood and acrylic behave differently when cut. Wood chars at the edge; acrylic melts and re-fuses cleanly.
- Ventilation is not optional. Fumes from even approved materials can be irritating at concentration.
- PVC is prohibited without exception. It releases chlorine gas when burned, which is toxic and corrodes the laser interior.
- Common PVC sources: foam board backing, certain colored acrylics, faux leather.

### C. Kerf and Tolerances

Kerf is the width of material removed by the laser beam. It is typically between 0.005" and 0.012" depending on material and machine. The critical implication: a slot drawn at 0.125" will be slightly wider than 0.125" after cutting. For a press-fit joint to hold without adhesive, this difference must be accounted for in the file.

- Demonstrate kerf by cutting a slot and measuring with calipers. Show the discrepancy.
- Walk through the calculation: measure kerf, subtract half from each side of the joint slot.
- Show a failed press-fit (too loose) and a successful one side by side.

> **MOST COMMON STUDENT FAILURE POINT**
>
> The press-fit joint is where most first attempts go wrong. A joint that is even 0.01" too loose will not hold. Having both a failed and a successful sample available makes this concrete in a way that the calculation alone cannot.

## Phase 3 — Guided Design Demo

30 MINUTES

Live demonstration from blank file to finished cut. Narrate every decision out loud. Participants should hear your thinking, not just watch the screen. This is the most technically dense part of the session. Slow down more than feels natural.

| Step | Action | What to Say or Show |
|---|---|---|
| 1 | **Open vector software** | Start from a blank document at the correct artboard size for your laser bed. |
| 2 | **Set line weights** | Hairline or 0.001pt stroke. Explain why thick lines cause the software to treat the path as a fill. |
| 3 | **Color-code operations** | Red = cut, Blue = score, Black = raster. Establish the convention and why it exists. |
| 4 | **Add kerf offset** | Apply the compensation from Phase 2 to the press-fit joint dimensions. |
| 5 | **Export the file** | Show the correct format: SVG, DXF, or AI depending on the laser software. |
| 6 | **Load into laser software** | Import, set origin, frame the job. Verify nothing sits off the bed. |
| 7 | **Set power and speed** | Walk through settings for 1/8" plywood. Explain that these vary by machine and material batch. |
| 8 | **Execute the cut** | Run the job with participants watching. Narrate what to look for: flame, smoke, missed cuts. |

**VERBAL MODELING — SAY THESE OUT LOUD**

"I'm checking alignment before I frame. A misaligned job wastes material."

"I'm reducing power slightly because this plywood looks denser than the last sheet."

"Notice I'm watching for flame. A small flare is normal. Sustained flame means stop."

## Phase 4 — Hands-On Activity

45-60 MINUTES

Participants design and fabricate a small object using press-fit joints. This is the session's primary learning experience. The concept instruction only fully makes sense once participants have tried to apply it and encountered a tolerance failure. Circulate constantly. Use questions rather than corrections.

### Design Challenge Brief

| Constraint | Requirement |
|---|---|
| **Joinery** | Design must use at least one press-fit joint. |
| **Material** | 1/8" plywood or cardboard for prototyping. |
| **File setup** | Correct line weights and color coding required before submitting to the cutter. |

| | |
|---|---|
| **Kerf** | Participants must account for kerf in joint dimensions. |
| **Output** | Fabricated object, a fit test, and a brief reflection. |

Project options (participants choose one):

- Phone stand
- Modular sculpture
- Desk organizer
- Mechanical linkage prototype

### Participant workflow:

**Sketch.** Draw the object by hand first. Include dimensions and joint locations.

**Design.** Build the vector file, applying kerf compensation to joint dimensions.

**Preflight.** Check line weights, color coding, and file format before submitting.

**Fabricate.** Cut and assemble. Test the press-fit joint immediately.

**Evaluate.** Does it fit? Note what to adjust. A second cut is expected, not a failure.

> **FACILITATION NOTE**
>
> Resist solving problems for participants. When something does not fit, ask "What was your kerf measurement?" rather than correcting the dimension. A failed first attempt is the most valuable part of this session. It makes tolerances tangible in a way that no amount of direct instruction can.

### Phase 5 — Reflection and Critique

20 MINUTES

Gather participants for a structured debrief. The goal is to consolidate learning, surface shared insights, and connect the hands-on experience back to classroom application. Run this as a community of practice conversation, not an evaluation.

1. What worked as expected, and what surprised you?
2. Where did tolerance fail, and what would you change in your file?
3. What surprised you about how the material behaved?
4. How might you adapt this project or process for your own students?

**CLOSING THE SESSION**

After individual reflection, run a 5-minute peer share. Each participant names one thing they would change and one classroom application they are already thinking about.

Point participants to the Laser Cutting 101 video (42-minute recap lecture) and the Fabrication 2.0 Handbook as take-home references.

SECTION 3

## Assessment

### Formative Assessment (during activity)

| Observation Area | Look and Listen For |
|---|---|
| **File setup** | Does the file use hairline strokes and correct color coding before submission? |
| **Kerf application** | Did the participant calculate and apply a kerf offset to joint dimensions? |
| **Iteration** | When a fit fails, does the participant diagnose the cause before re-cutting? |
| **Safety** | Is the participant following material approval, fire watch, and ventilation procedures? |

### Summative Assessment (end of session)

| Evidence | Quality Indicator |
|---|---|
| **Fabricated object** | Does the press-fit joint hold without adhesive? Does it match the intended design? |
| **Reflection quality** | Does the participant accurately identify what caused any tolerance failures? |
| **Concept demonstration** | Can the participant explain kerf and why a 0.125" drawn slot does not equal a 0.125" press-fit? |

SECTION 4

## Differentiation

Participants arrive with widely varying software fluency and fabrication experience. The strategies below allow you to support beginners without holding back those who are ready to go deeper.

| Area | Beginner Support | Advanced Extension |
|---|---|---|
| **File design** | Provide a template file with correct line weights and color coding set up. Participants modify geometry only. | Challenge participants to build a fully parametric file where kerf, material thickness, and joint tolerance are all variable-driven. |
| **Kerf** | Provide a pre-measured kerf value. Participants apply the number rather than measuring it themselves. | Participants measure kerf with calipers, calculate the compensation, and verify it in a test cut before committing to their design. |
| **Project scope** | Limit the design to a two-piece press-fit box. Fewer joints means fewer opportunities for tolerance failure. | Introduce living hinges, multi-part assemblies, or mechanical linkages as extension challenges. |
| **Classroom transfer** | Provide a list of NGSS- and CSTA-aligned project prompts that can be done with a laser cutter in a K-12 setting. | Participants sketch a lesson plan for one project idea, including materials, objectives, and assessment. |

SECTION 5

## Safety and Risk Management

Review these procedures with participants before any material is loaded. Safety protocol is introduced at the start of the hands-on phase, not assumed.

| Procedure | Protocol | Facilitator Note |
|---|---|---|
| **Material approval** | All materials must be approved before cutting. No participant loads material that has not been verified as laser-safe. | Keep a visible approved-materials list posted at the machine. |
| **Fire watch** | The machine must never be left unattended during a cut. Assign one person to watch for flame at all times. Sustained flame means stop immediately and open the lid. | Small fires: open lid and smother. Do not use water on acrylic. |
| **Ventilation** | Ensure ventilation or filtration is running before every cut. If the room smells strongly of smoke, pause and increase airflow. | Do not rely on smell alone as a safety indicator for all materials. |
| **PVC prohibition** | PVC and vinyl release chlorine gas when burned. This is toxic and corrodes the laser interior. When in doubt, do not cut. | Common PVC sources: foam board backing, certain colored acrylics, faux leather. |
| **Emergency stop** | Every participant should locate the emergency stop before the session begins. Opening the lid stops the cut. The power switch cuts all operation. | Post emergency stop instructions visibly at the machine. |

SECTION 6

# Instructional Design Notes

This section is for educators who want to understand the pedagogical reasoning behind the session structure, or who are adapting this guide for use with students.

### Backward Design

The session was built by defining exit competencies first and designing instruction to produce them. The press-fit fabrication challenge is the primary evidence task. All prior instruction exists to set it up.

### Constructivism

Participants learn by making. The concept instruction in Phase 2 is intentionally incomplete. The gaps become visible and meaningful only after participants attempt the design challenge and encounter a tolerance failure firsthand.

### Project-Based Learning

The design challenge produces a physical artifact rather than a test response. This grounds abstract concepts in consequences participants can hold, test, and iterate on.

### Socratic Facilitation

During the hands-on phase, facilitators ask questions rather than provide answers. "What was your kerf offset?" surfaces the participant's reasoning. "Your kerf offset should be 0.004" forecloses it.

### Differentiated Challenge

The session provides a floor (template files, pre-measured kerf values) and a ceiling (parametric modeling, living hinges) so participants at different skill levels encounter productive challenge without being blocked or bored.

## Extension Options

| Technical Extensions | Classroom Extensions |
|---|---|
| Integrate Arduino components into a fabricated housing Explore living hinge geometry and structural behavior Introduce batch production and nesting for material efficiency Compare laser-cut joinery to 3D-printed joinery for the same design | Develop a packaging prototype for a student-designed product Explore sustainable material alternatives to plywood and acrylic Design and cut a physical model for a science concept Connect to a design sprint framework for a full project-based unit |

**TAKE-HOME RESOURCES**

Laser Cutting 101 — 42-minute video recap covering all core concepts from this session: youtube.com/watch?v=BxX-kLu1_gE

Fabrication 2.0 Handbook: Making in the Classroom — comprehensive reference covering setup, maintenance, safety, classroom management, and project ideas for Bambu 3D Printers and FSL Laser Cutters. Developed for the LAUSD multi-district fabrication rollout.

Project Playbooks — ready-to-use classroom project guides including Gravity Cart, Cardboard Connectors, Table Caddies, and Catapult. Available at twobitcircus.org/quick-plays/

# SLOT CARS CONTROLLER BOX ONE SHEET

## PURPOSE

The purpose of this document is to act as a one-page breakdown of the  Slot Cars Controller Box. This document will include a project rendering and circuit diagram, an electrical flow breakdown, and actual images of the final Controller Box to demonstrate how the engineering theory described in this document was applied.

## RENDERING AND  ELECTRICAL FLOW

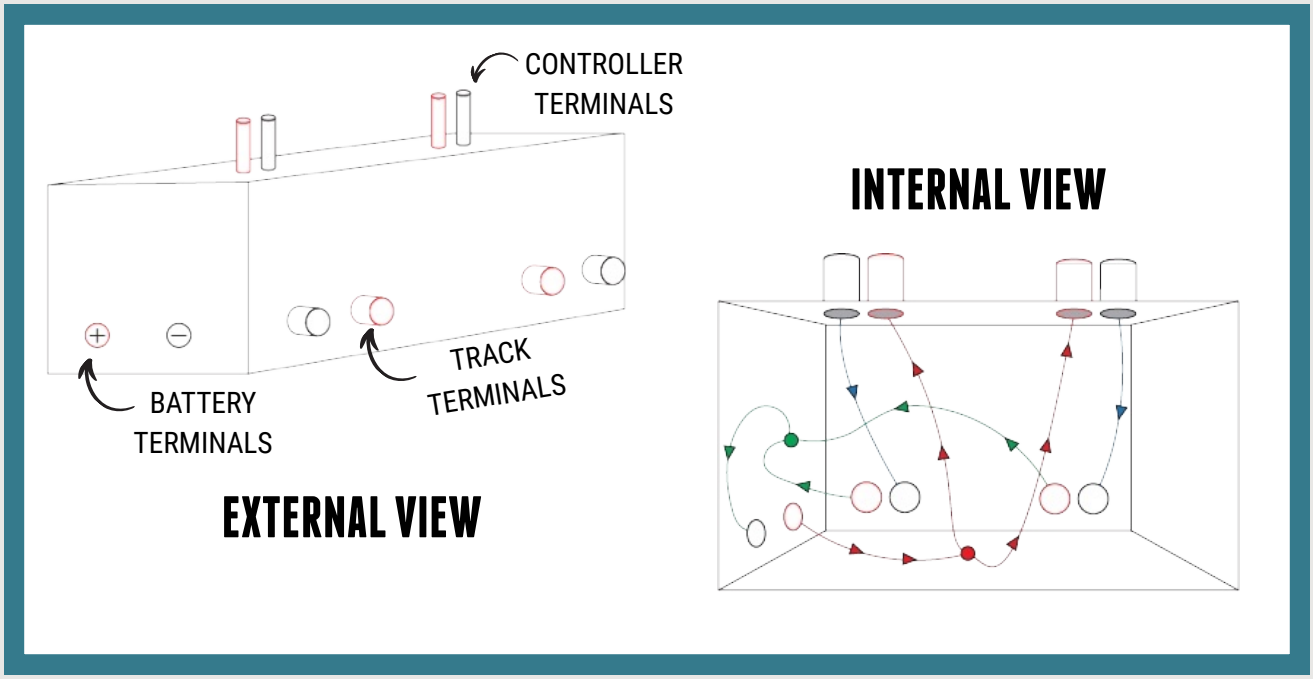


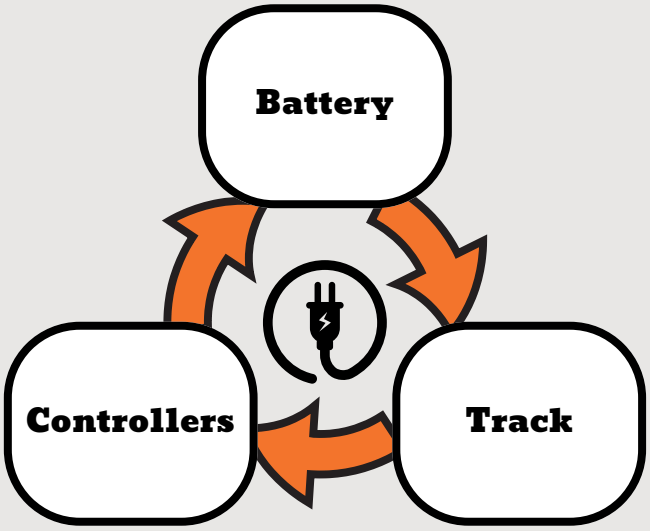

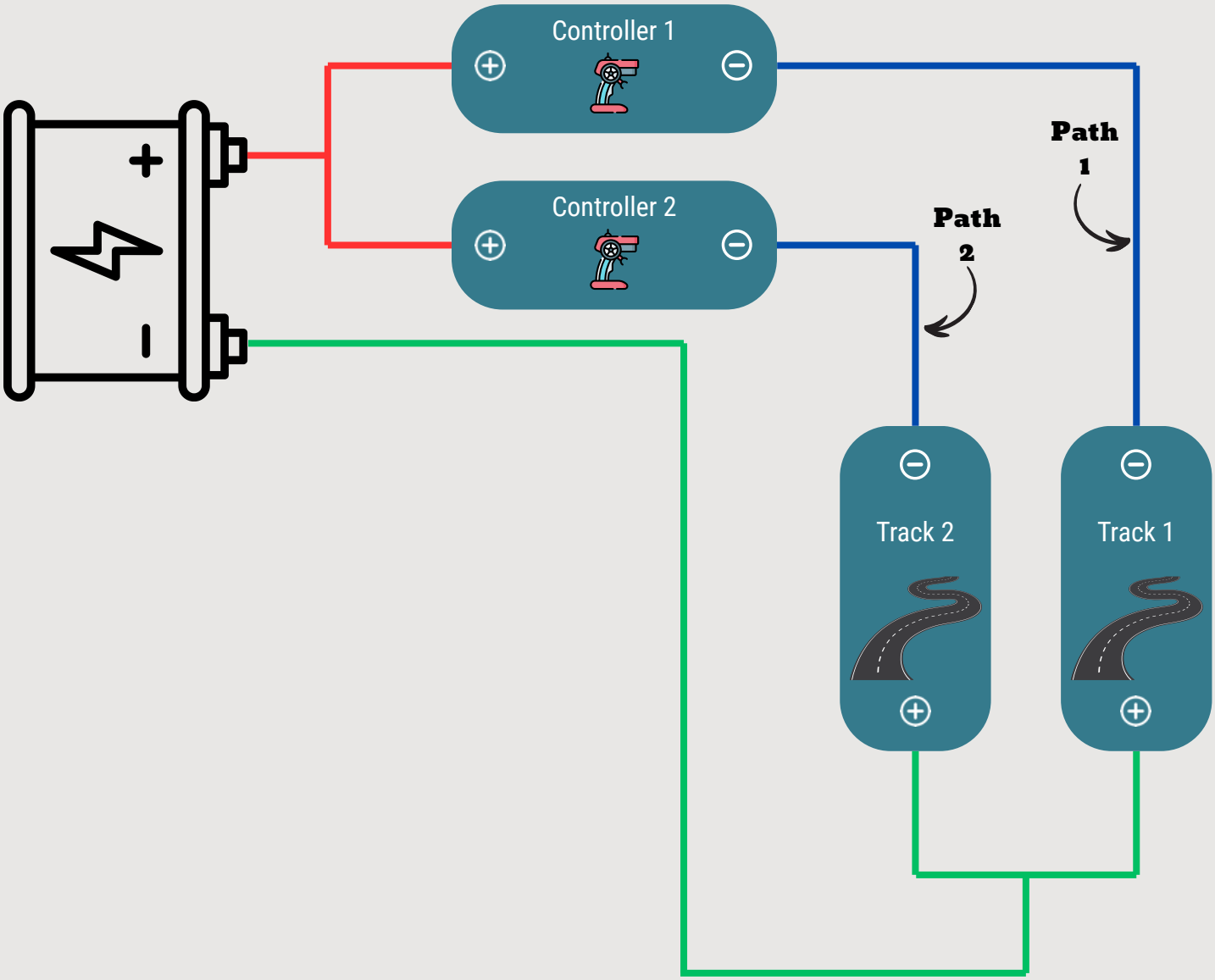


## SUMMARY

In this control box, there are three points of interest - the battery terminals, the controller terminals, and the track terminals. Electricity begins by flowing in from the positive battery terminal, and then splits at a junction to flow into each positive controller terminal (allowing for two, independent circuits that each controller can tap into). When clipped on, each controller completes it’s respective circuit, allowing the electricity flow through the negative controller terminals and into the corresponding positive track terminals. From there, the track is electrified and returns the current back through the negative track terminals, and both of these current lines recombine at another junction, finally flowing back to the negative terminal of the battery.

This circuit relies creating two smaller, parallel circuits within one larger network - Controller 1 and Track 1 operate independently of Controller 2 and Track 2, and their wiring corresponds to each other (i.e. Controller 1's wiring will only connect to Track 1's terminals, and same with its counterpart.)

## Instructional Materials

As an educator and curriculum developer, I have produced bountiful supplemental educational tools in the form of Industrial Design, Fabrication, and Engineering tutorials. Among the chief publicly available resources are the following:

*The Fabrication 2.0 Handbook: Making in the Classroom*
*https://drive.google.com/file/d/1MWMjd9UiBkaC39f6vd4nrBTYd1P97aV6/view?usp=drive_link*
This is a comprehensive guide to setup, maintenance, tool safety, classroom management, and project ideas for the public school teachers of LA County, to prepare them for a multi-district rollout of new fabrication devices, including Bambu 3D Printers and FSL Laser Cutters. I developed this as a supplement of a lecture series I gave on 3D Printers and Laser Cutters, as part of The Two Bit Circus Foundation.

*Laser Cutting 101*
https://www.youtube.com/watch?v=BxX-kLu1_gE
In addition to the lecture series and handbook I developed, I also lesson-planned, shot, starred in, and edited a 42 minute recap lecture to act as a resource for the teachers who wanted to refresh their knowledge of Laser Cutting. In the tutorial, I go through the basic principles of Laser Cutting, Safety Guidance, Classroom Management Strategies, and a complete a 0–to–1 demonstration of how to prep a file and send it over to a FSL Laser Cutter.

# ART BOT

## Engineering

TWO BIT CIRCUS FOUNDATION

# Lesson Guide

### Objective:

Students will be challenged to learn what a robot is and to build from recycled materials, a robot that can draw.

### Quick Reminders

- Not all robots will look the same. That is a good thing!
- Support the students through asking thought provoking questions - but don't give away answers.
- A healthy level of frustration means the project is working as intended.
  - Encourage students to continue, persevere and overcome failures.
  - It is okay to assist students at varying levels depending on age, motor skills and efficacy. However, it is also OK to let students struggle in the learning process and only support through guidance, and reassurance.
- If a certain material runs out, that means time to pivot and challenge students.
- It is OK if not all students have the same building materials.

### Pre-Class Set Up:

1. Set up a section of the room that is for material selection.
2. Set up a section of the room dedicated to tools (somewhere easy to monitor & support)
3. Think strategically about the lesson, the room, and where you will deliver each aspect of the lesson.
4. Think about what you will be checking for during the lesson, try and anticipate where students will struggle, where they will need support, and how you plan to offer that support.
5. When time, provide students with the materials for completing the circuit.
6. They won't need any other materials on their desks at this time.
7. Use student volunteers to help pass out the materials.

# Lesson Guide

## Welcome Students and Introduce Yourself (3 Minutes)

1. "Hello my name is _____ and this is _____, who will be helping us.
2. "In order to do today's activity, we need to make sure that we are able to hear instructions clearly, and are being safe. When I want to get your attention I will do _____." (Introduce your attention getter).
3. "When I do _____ (the attention getter) I would like all of you to put all the materials down, lower our volume all the way down and look up here."
4. "Let's give it a try" (Practice your attention getter)

Recall that the point of this endeavor is to properly manage the classroom, and create a collaborative environment. It ought to be done in a friendly and community building manner and not authoritatively(me vs you).

## Gather Students Around to Read "The Artbot Story" (7 Minutes)

1. If there is a carpeted area, or area to group students, you can transition them to that area for story time. Otherwise, read to students, and use the space of the room as part of your engagement.
2. **(Data Collection)** Make the questions sound like a part of the activity and fun - not a test; students shouldn't be observant that data is being collected. Secondary facilitator records responses.
   a. Ask students to raise their hands if they think they can build a robot? (Secondary facilitators in the back of the room should quickly tally the hands and record the data on the pre survey form).
   b. Ask students "what makes a machine a robot?" "Raise your hand if you think: "Having hands and feet," "Needs to be made of metal," " Does something automatically/by itself"
   c. Reassure students that it is ok if they do not know what a robot is and we are here to learn about what makes a robot.

# Lesson Guide

## Gather Students Around to Read "The Artbot Story"

1. Walk around the room as you read. Find strategic locations to make points in the story clear, use voice to highlight, exaggerate and excite at specific times in the story.
    a. **(Data Collection)** Ask students about the story as a whole group.
        i. "What makes Squiggle a robot?" Raise your hand if its because:
            1. "He has hands and feet"
            2. "He is made of metal"
            3. "He can make art by himself?"
        ii. "What is it that Squiggle can do? (Draw).
2. Tell students that today they will get an opportunity to build an Artbot that can shake and move about to draw and create patterns on paper like Squiggle!
3. That the point of this endeavor is to properly manage the classroom, and create a collaborative environment. It ought to be done in a friendly and community building manner and not authoritatively(me vs you).

## Getting Motor Max to Spin (10 Minutes)

1. Pass out the required materials for the ArtBot circuit
    a. Battery holder, batteries, extension wires, motor.
2. Challenge the class to see if they can make their motor turn on/start spinning.
    a. "Hmmm, I remember from the story that we need to get a motor to spin; like the one Squiggle the ArtBot has".
    b. "Do you all remember the name of the motor from the story?"
    c. Get students' answers - "Motor Max" was his name.
    d. "I will give you 5 minutes to experiment and let us see if you can get "Motor Max" to spin.
3. Facilitate and support students' efforts to get the motor to spin.
    a. Remember our ways to support students and allow them to explore.
    b. Remind students of time, for example, "we have 2 minutes left"

# Lesson Guide

## Getting Motor Max to Spin

4. When time is up, use your attention getter. REMEMBER to exercise wait time & wait until you have the room to give next directions.
    a. Ask students to unplug Motor Max to save his energy.
    b. Monitor and check that all students have unplugged their motors.

## Making Their Robot (20 Minutes)

1. Transition students into building their Artbot body.
    a. "Class we now need to find what recycled material we want to use for our Artbot". You can choose to remind students about the character Cupbert, but tell them they don't have to choose a cup design, it can be any material from the bins that they think will be a good fit for their bot.
    b. Have students line up, or call them up table by table to walk the material area and select their main body.
    c. The supporting facilitator can circle around and pass out a handful of markers to each area for students to use as legs for their bot.
2. Once all students have their material body, support students in working to attach their legs to their bot.
    a. Do they want 2,3,4 legs? They can experiment with the number of legs to balance their bot and how to attach them.
    b. Facilitate the group as they are attaching their robot legs.
    c. Students may decide to change their body at this time if there original material and idea doesn't work out for them.
3. Students decide how they will attach the 'Motor Max' circuit.

# Lesson Guide

## CLEANING UP + ART DRAWING(15 MINUTES)

1. Transition from making robots to directing students how to clean up. Use your attention getter to settle everyone in.
2. Once you have the attention of the room,ask students to clean up
3. Give specific instructions on how to clean up (below are some examples, physically modeling what you are asking also helps)
    a. "Please collect all the trash, calmly walk over to the trash can and throw it away."
    b. "Collect unused materials, bring them to the material area and match them with the materials in each container."
4. Students practice drawing different designs using their bots on paper.
5. Play 'Simon Says' to **Collect Data** for the final questionnaire. Topic can be done in any order. You can even add more to lighten the mood (but make sure you get the data for these topics!)

# ART BOT
## Engineering

TWO BIT CIRCUS FOUNDATION

## Data Collection

# of Students / Total Students

### Pre-Activity Questionaiire

**Do you think you can build a robot?** — Responses

(A) YES

(B) NO

### Post-Activity Questionaiire

**Do you think you can build a Robot?** — Responses

(A) YES

(B) NO

Simon says! . . . _____(action) if you had fun doing _____ today!

## Post-Activity Engagement

| | Recess | Math | Talking to Your Friends | Science | Lunch | Today's Activity |
|---|---|---|---|---|---|---|
| Tally | | | | | | |

# ART BOT
## Engineering

TWO BIT CIRCUS FOUNDATION

# Data Collection

# of Students / Total Students

## Pre-Story Questionaiire

### What Makes A Machine a Robot?

Responses

(A) Having Hands and Feet

(B) Needs to be Made of Metal

(C) Can Do Something Automatically/By Itself

## Post-Story Questionaiire

### What Makes Squiggle a Robot?

Responses

(A) Having Hands and Feet

(B) He is Made of Metal?

(C) He Can Make Art By Himself

# ArtBot Activity: Learning Outcomes Summary

## Quantitative Outcomes

- Pre-activity: 35% of students said they could build a robot
- Post-activity: 95% of students said they could build a robot
- Common misconceptions addressed:
  - Robots need to have hands/feet
  - Robots must be made of metal

## Qualitative Insights

- "I didn’t think a cup could make art!"
- "We made Squiggle dance. That was my favorite part!"
- "Next time, I want to make one that draws stars."

## Instructor Reflections

- Students showed strong gains in collaborative problem solving.
- Learning was highly differentiated through open-ended construction.
- SEL and engagement indicators were high across all age groups.

# Purpose

The purpose of these rubrics are to assess the overall engagement of students while working throughout our programs.

# Measured Criteria

In order to assess engagement we will use classroom observations to measure in the following categories:

### Collaboration

Two or more people are working together to achieve a common goal.

### Communication

The exchange of information and ideas.

### Creative Thinking

The generation of new ideas, processes, or solutions.

### Critical Thinking

The process of analyzing information and drawing conclusions.

# Why Are We Measuring These Categories?

| | |
|---|---|
| Collaboration | Provides insight to students' active participation. (involvement with activities) |
| Communication | Provides insight into students' ability to share their understanding of both creative thinking and critical thinking around educational content. |
| Creative Thinking | Provides insight into the active thinking process of students to solve problems as related to educational content. |
| Critical Thinking | Provides insight into students' ability to process, analyze and draw conclusions around subject matter. |