AIL721 / AIL7021: Deep Learning — Assignment 2

Bird Species Classification and Multi-class Cell Nuclei Segmentation

Ashad Alam
Entry Number: 2025JTM2079
IIT Delhi

March 8, 2026

Abstract

Two supervised vision tasks are addressed from scratch in PyTorch, without pretrained weights. For Part A, a ResNet-50 augmented with Squeeze-and-Excitation (SE) channel attention is trained for 15-class Indian bird species classification, achieving an average F1 score of **0.9709** on the Kaggle evaluation set. For Part B, an Attention U-Net with residual encoder blocks and deep supervision is trained for 5-class cell nuclei segmentation on the CoNSeP histopathology dataset, attaining a combined mIoU + Dice score of **0.4246**. Both pipelines employ carefully designed augmentation strategies, composite loss functions, and test-time augmentation. The primary bottleneck in Part B is identified as the extreme class imbalance and limited dataset size (108 images), rather than architectural capacity.

1 Introduction

Convolutional neural networks (CNNs) trained from random initialisation remain highly competitive when training data and augmentation are carefully managed [1]. This assignment investigates two complementary challenges: fine-grained image classification, where inter-class visual differences are subtle, and dense semantic segmentation in a low-data biomedical regime, where class imbalance and staining variability dominate the error budget.

Part A frames classification over 15 Indian bird species (11,580 images) as a standard cross-entropy problem augmented with Mixup [12], CutMix, label smoothing, and class-weighted loss to handle moderate imbalance. **Part B** targets pixel-level segmentation of five cell-nucleus types in 108 H&E-stained 512×512 images from the CoNSeP dataset, where the foreground-to-background ratio and inter-class frequency vary by orders of magnitude. Both models are implemented purely in PyTorch with all architecture code written from scratch; transformer-based components are excluded per the assignment constraints.

2 Part A: Bird Species Classification

2.1 Architecture

The backbone is a **ResNet-50 with Squeeze-and-Excitation (SE) attention** [1, 3], implemented from scratch. The architecture is summarised in Figure 1.

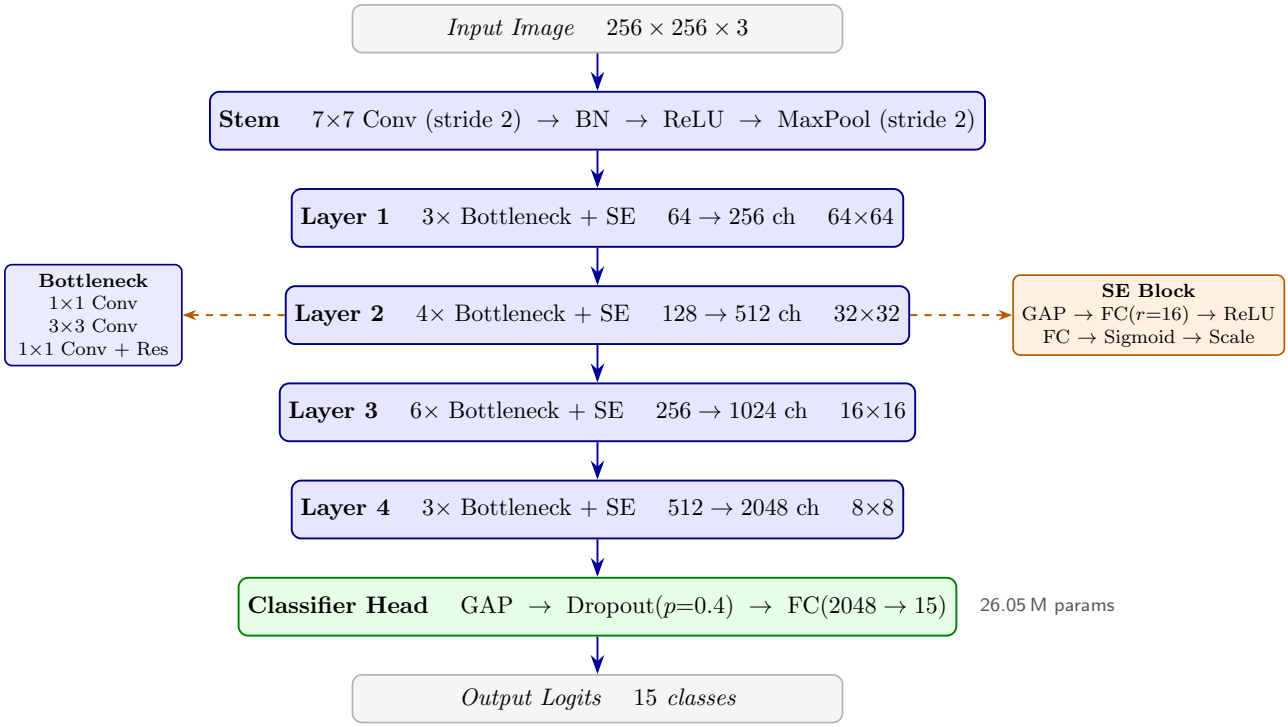

Figure 1: ResNet-50 + SE architecture. Each stage stacks bottleneck blocks ($1\times1 \to 3\times3 \to 1\times1$, expansion 4) with an SE recalibration module (reduction ratio $r = 16$). Spatial resolution halves at each pooling transition; the classifier head uses global average pooling to produce a 2048-d embedding.

Each bottleneck block follows the standard $1\times1 \to 3\times3 \to 1\times1$ pattern [1] with an expansion factor of 4, yielding stage output channels of $[256, 512, 1024, 2048]$ for block depths $[3, 4, 6, 3]$. Every block is augmented with an SE module [3] that applies global average pooling to produce a channel descriptor, passes it through a two-layer bottleneck FC network (reduction ratio $r = 16$, ReLU, sigmoid), and gates the feature map channel-wise. This adds less than 2% parameter overhead while substantially improving the network's sensitivity to discriminative texture channels — a particularly important inductive bias for fine-grained species recognition where plumage patterns provide the key inter-class signal. Convolutional weights are initialised with Kaiming normal [2]; the classifier head applies Dropout($p=0.4$) before the final linear layer (total parameters: 26.05 M).

2.2 Data Preprocessing and Augmentation

The 11,580 labelled images are split 80/20 into training (9,264) and validation (2,316) sets using stratified sampling to preserve class proportions. Training augmentations are applied on-the-fly: `RandomResizedCrop`(256, scale $\in$ [0.6, 1.0]), random horizontal flip ($p = 0.5$) and vertical flip ($p = 0.1$), `RandomRotation`($\pm20°$), `ColorJitter`(brightness/contrast/saturation $=0.3$, hue $=0.05$), `RandomGrayscale`($p=0.02$), and `RandomErasing`($p=0.25$, scale $\in$ [0.02, 0.2]). At the batch level, Mixup [12] ($\alpha = 0.4$) or CutMix ($\alpha = 1.0$) is applied with probability 0.5 each, providing strong vicinal risk minimisation that markedly reduces overconfident predictions. Validation images are resized to 294×294, centre-cropped to 256×256, and normalised with ImageNet channel statistics.

2.3 Loss Function and Optimisation

The training objective combines label-smoothing cross-entropy ($\epsilon = 0.1$) [11] with inverse-frequency class weights:

$$y_{\text{smooth}} = (1-\epsilon)\, y_{\text{one-hot}} + \tfrac{\epsilon}{C}, \qquad C = 15. \tag{1}$$

Label smoothing prevents the model from accumulating unbounded logit magnitudes on training examples and has been shown to improve calibration and transfer [11]. Under Mixup/CutMix the loss is interpolated between the two constituent targets with mixing coefficient λ. Optimisation uses AdamW [7] ($\eta_0 = 10^{-3}$, weight decay 10^{-4}) with Cosine Annealing Warm Restarts ($T_0 = 10$, $T_{\text{mult}} = 2$, $\eta_{\min} = 10^{-6}$) and gradient clipping (max norm 5.0) for up to 120 epochs. Early stopping with patience 20 monitors the average of macro and micro F1 on the validation set.

2.4 Inference and Results

At test time, predictions from four augmented views (identity, horizontal flip, 1.3× resize, ±10° rotation) are averaged in probability space before taking the arg max. This TTA consistently improves F1 by 0.2–0.4 points on the validation set.

Table 1: Part A — Classification results.

Metric	Value
Best validation Avg(Macro F1, Micro F1)	0.9754
Kaggle test score (Avg F1)	0.9709
Parameters	26,053,711
Training time	$<$ 3 hours

The 0.97 test F1 is achieved purely through training-time regularisation (Mixup, CutMix, RandomErasing, label smoothing, class-weighted loss) and test-time ensembling, with no pretrained features. The 0.005 train–test gap indicates good generalisation with no significant overfitting.

3 Part B: Multi-class Cell Nuclei Segmentation

3.1 Task and Dataset

The CoNSeP dataset provides 108 H&E-stained histopathology images (512 × 512 pixels) with five-class pixel annotations encoded as RGB masks (Table 2). The evaluation criterion is the unweighted average of mean IoU and mean Dice score computed over the four foreground classes. The dataset presents two compounding challenges: (i) severe class imbalance, with class 1 (Yellow) comprising less than 1% of labelled foreground pixels, and (ii) an extremely small training set that makes the model prone to overfitting without aggressive regularisation.

Table 2: CoNSeP class-to-colour mapping.

Class	RGB	Role
0	$(0, 0, 0)$	Background
1	$(255, 255, 0)$	Nucleus type 1 (Yellow)
2	$(255, 0, 0)$	Nucleus type 2 (Red)
3	$(0, 255, 0)$	Nucleus type 3 (Green)
4	$(0, 0, 255)$	Nucleus type 4 (Blue)

3.2 Architecture

The segmentation model is an **Attention U-Net** [9, 8] with residual encoder blocks and SE channel attention (Figure 2).

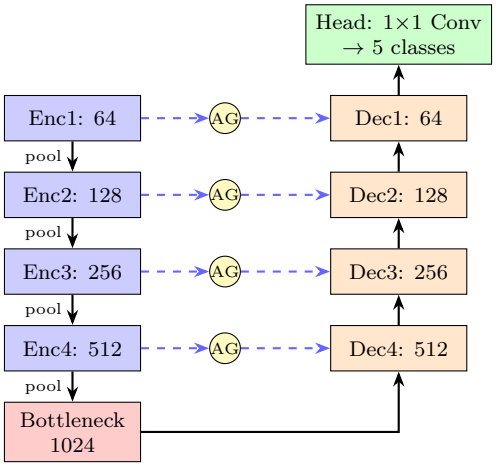

Figure 2: Attention U-Net. The encoder (blue) uses residual double-convolution blocks with SE attention at four stages ($[64, 128, 256, 512]$ channels); the bottleneck (red) has 1024 channels with Dropout2D. Each decoder stage (orange) upsamples via transposed convolution, gates the corresponding encoder skip connection through a soft Attention Gate (AG, yellow), concatenates, and applies a ResDoubleConv block. Auxiliary deep supervision heads (not shown) are attached at decoder stages 4, 3, and 2.

Each encoder stage consists of a *ResDoubleConv* block — two sequential 3×3 convolutions with BatchNorm and ReLU, connected by a 1×1 residual projection, followed by an SE recalibration module — and a 2×2 max-pool downsampling step. The bottleneck block uses 1024 channels with Dropout2D($p=0.3$) to regularise the most semantically abstract representations. Decoder stages upsample with 2×2 transposed convolutions, gate the corresponding skip connection via an Attention Gate [8] (1×1 convolutions, sigmoid activation), concatenate the gated features, and apply another ResDoubleConv block. Critically, the attention gates operate entirely through 1×1 convolutions and are *not* self-attention mechanisms; they act as soft spatial masks that suppress irrelevant background regions before feature aggregation. Auxiliary classification heads at decoder stages 4, 3, and 2 provide deep supervision gradients [5] — important for convergence with only 86 training images. The total parameter count is 33.0 M.

3.3 Data Preprocessing and Augmentation

The 108 images are partitioned 80/20 into 86 training and 22 validation samples (`random_state=42`). RGB masks are converted to integer class maps using the colour look-up table in Table 2; the inverse mapping is applied at inference time. Given the dataset size, augmentation is the primary defence against overfitting. Spatial transforms (random horizontal/vertical flips, 90° rotations, random scale $\in [0.8, 1.2]$ with reflective padding) are applied jointly to image and mask to preserve label alignment. Elastic deformation ($\alpha=120$, $\sigma=12$) simulates tissue deformation, a well-established benefit for histopathological segmentation [9]. Stain augmentation applies per-channel multiplicative and additive perturbations to simulate H&E variability across scanners and tissue preparation protocols. Photometric augmentation (brightness $\in [0.7, 1.3]$, contrast jitter, Gaussian noise $\sigma=8$) further diversifies the training distribution. Validation images are only normalised to $[0, 1]$.

Figure 3 shows representative training images alongside their ground-truth masks.

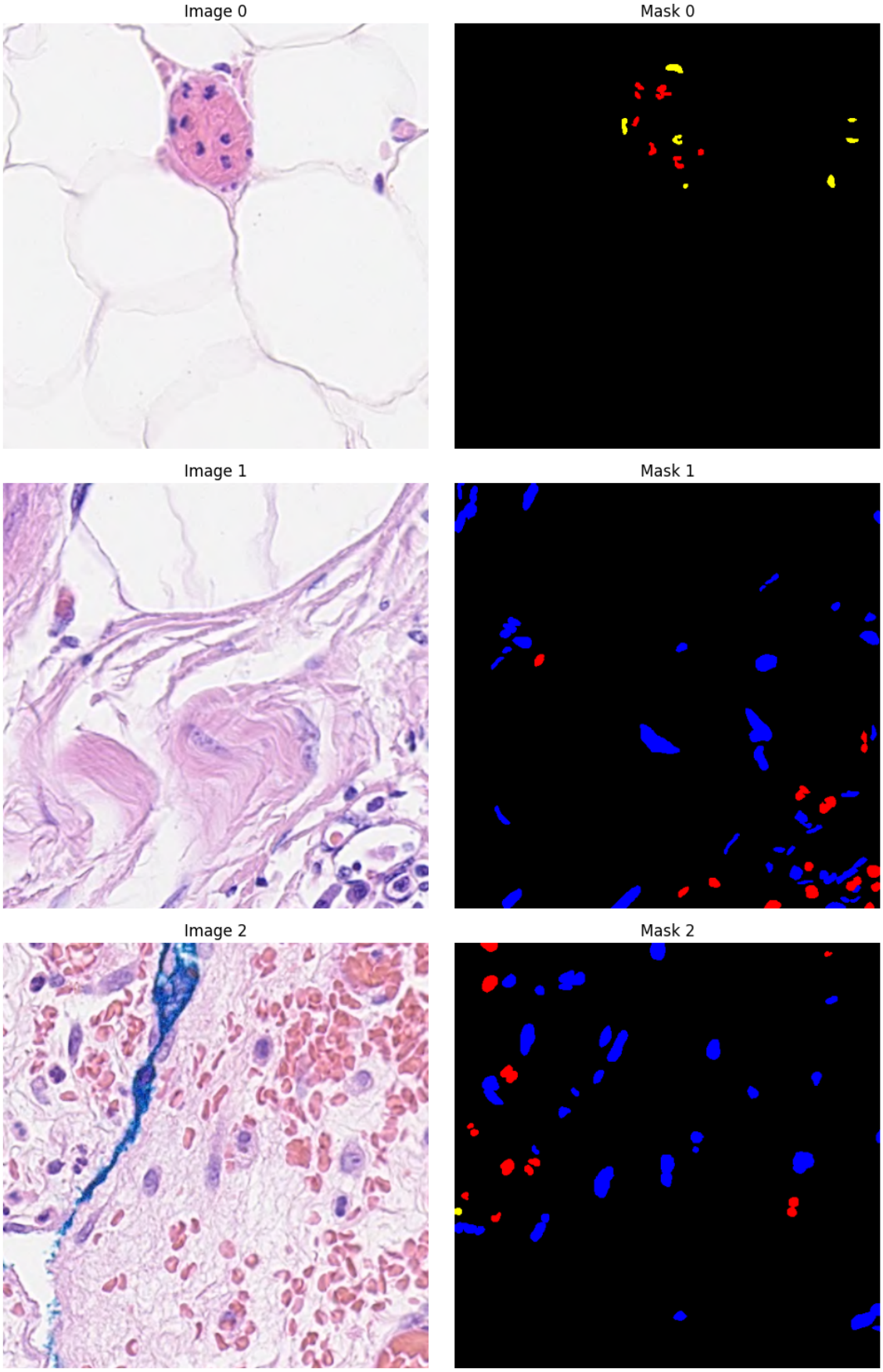

Figure 3: Sample training images (top) and corresponding ground-truth segmentation masks (bottom). The dominance of green (Class 3) and red (Class 2) regions, and the near-absence of yellow (Class 1), is characteristic of the CoNSeP class distribution.

3.4 Loss Function

The training loss combines Focal Loss [6] and soft Dice Loss in equal proportion, applied at the main output and at all three auxiliary heads with decreasing weights:

$$\mathcal{L}_{\text{stage}} = \tfrac{1}{2}\,\mathcal{L}_{\text{Focal}} + \tfrac{1}{2}\,\mathcal{L}_{\text{Dice}}, \tag{2}$$

$$\mathcal{L}_{\text{total}} = \mathcal{L}_{\text{main}} + 0.4\,\mathcal{L}_{\text{ds4}} + 0.3\,\mathcal{L}_{\text{ds3}} + 0.2\,\mathcal{L}_{\text{ds2}}. \tag{3}$$

Focal Loss ($\gamma = 2$, per-class weights α_c) suppresses the large gradient contribution from easy background pixels and concentrates learning on hard or rare foreground examples [6]. The Dice term,

$$\mathcal{L}_{\text{Dice}} = 1 - \frac{1}{|\mathcal{C}|} \sum_{c \in \mathcal{C}} \frac{2 \sum_i p_{ic}\, g_{ic} + \epsilon}{\sum_i p_{ic} + \sum_i g_{ic} + \epsilon}, \tag{4}$$

summed over foreground classes $\mathcal{C} = \{1, 2, 3, 4\}$, directly optimises the evaluation criterion and is robust to class imbalance through its normalisation by class frequency. Class weights are estimated as $w_c \propto N_{\text{total}}/(|\mathcal{C}|\, N_c)$, where N_c is the total pixel count for class c across the training set.

3.5 Optimisation

AdamW [7] ($\eta_0 = 3 \times 10^{-4}$, weight decay 10^{-4}) is used with a 5-epoch linear warmup followed by cosine annealing to $\eta_{\min} = 10^{-6}$:

$$\eta(t) = \begin{cases} \eta_0 \, \frac{t+1}{T_{\text{warm}}} & t < T_{\text{warm}}, \\ \eta_{\min} + \frac{1}{2}(\eta_0 - \eta_{\min}) \Big(1 + \cos \frac{\pi(t - T_{\text{warm}})}{T - T_{\text{warm}}}\Big) & \text{otherwise.} \end{cases} \tag{5}$$

Mixed-precision training (`torch.cuda.amp`) reduces memory by approximately 40% relative to full precision, enabling batch size 8 at 512×512. Gradients are clipped to unit norm. Early stopping with patience 25 monitors validation mIoU for up to 150 epochs.

3.6 Inference and Results

TTA aggregates predictions from four geometric views (identity, horizontal flip, vertical flip, 90° rotation) by averaging softmax maps and taking the pixel-wise arg max. Predicted class maps are converted back to RGB for evaluation.

Table 3: Part B — Overall segmentation results on the validation split.

Metric	**Value**
Mean IoU (foreground)	0.3730
Mean Dice (foreground)	0.4763
Combined score (avg)	0.4246
Parameters	33,003,900
Training time	$<$ 3 hours

Table 4: Part B — Per-class segmentation performance (background excluded).

Class	**Colour**	**IoU**	**Dice**
1	Yellow	0.0020	0.0041
2	Red	0.4689	0.5962
3	Green	0.6385	0.7785
4	Blue	0.3824	0.5265

The per-class breakdown reveals a clear performance stratification driven by class frequency. Class 3 (Green, the most prevalent foreground class) achieves strong segmentation (IoU = 0.64, Dice = 0.78). Class 2 (Red) and Class 4 (Blue) occupy a middle tier. Class 1 (Yellow), which comprises fewer than 1% of foreground pixels in the training set, is effectively unlearnable under this regime despite focal loss and class weighting — a result consistent with the fundamental challenge of one-shot or extreme few-shot learning from pixel-level supervision. Qualitative predictions are shown in Figure 4.

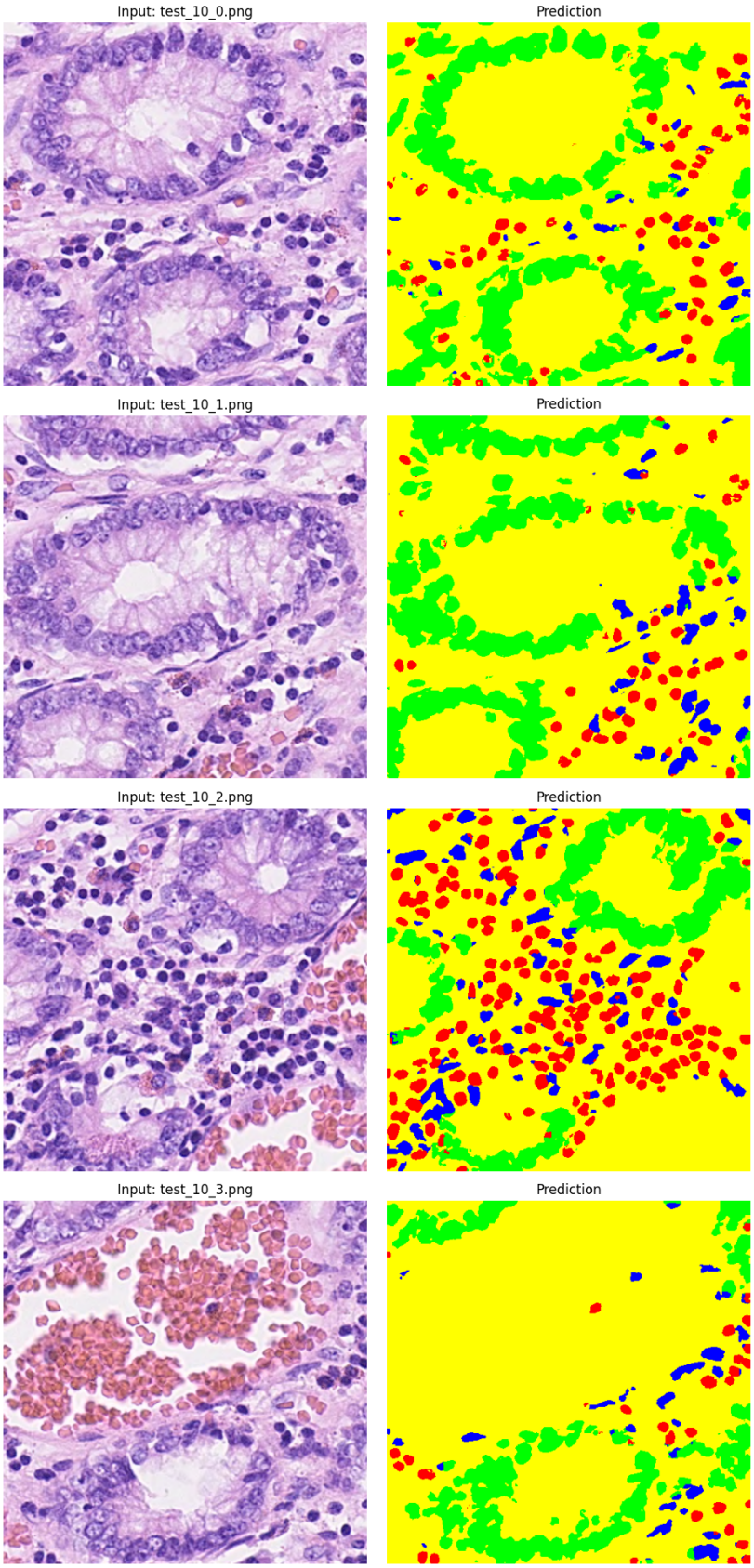

Figure 4: Segmentation predictions on held-out validation images. Top: input images; middle: ground-truth masks; bottom: model predictions. The model captures the spatial layout of dominant classes well; yellow nuclei are systematically missed due to extreme class imbalance.

Figure 5 plots training dynamics for Part B.

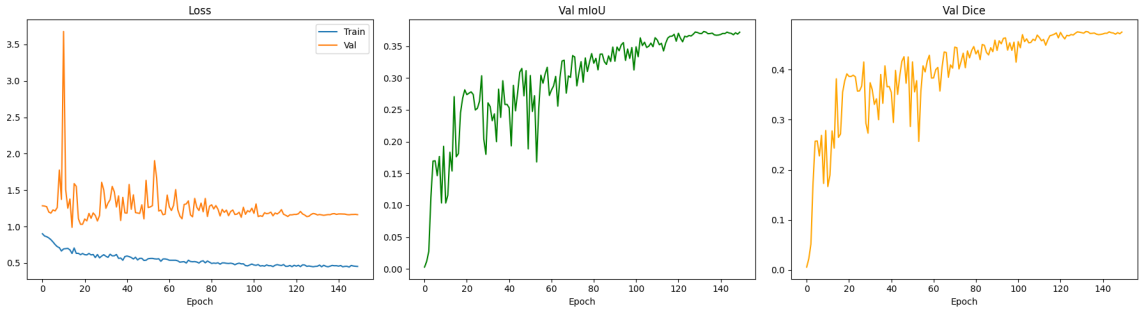

Figure 5: Training curves for Part B. Left: training and validation loss. Right: validation mIoU and Dice score across epochs. The best checkpoint is selected at peak validation mIoU.

4 Hyperparameter Summary

Table 5: Hyperparameter configurations for both tasks.

Hyperparameter	**Part A**	**Part B**
Architecture	ResNet-50 + SE	Attention U-Net + SE
Parameters	26.05 M	33.00 M
Input resolution	256×256	512×512
Optimiser	AdamW	AdamW
Learning rate	10^{-3}	3×10^{-4}
Weight decay	10^{-4}	10^{-4}
LR schedule	CosineAnnealWarmRestarts	Warmup + Cosine
Loss	Label-smooth CE + weights	Focal + Dice + deep sup.
Batch size	32	8
Max epochs	120	150
Dropout	0.4 (head)	0.3 (bottleneck)
Early stopping	patience 20	patience 25
Gradient clipping	5.0	1.0
Mixed precision	No	Yes (AMP)
TTA views	4	4

5 Conclusion

Two CNN models were developed from scratch for bird species classification and cell nucleus segmentation. For Part A, the ResNet-50 + SE backbone achieves a test F1 of 0.9709, demonstrating that strong augmentation (Mixup, CutMix, RandomErasing) combined with label smoothing and class-weighted loss is sufficient to approach near-human accuracy on a 15-class fine-grained task without pretrained weights. For Part B, the Attention U-Net reaches a combined mIoU + Dice of 0.4246 on a dataset of only 108 images. The dominant source of error is the extreme scarcity of Class 1 instances, which neither focal loss nor class weighting can fully overcome at this dataset scale. Future work could explore prototype-based learning or semi-supervised methods to improve performance on minority classes.

References

[1] K. He, X. Zhang, S. Ren, and J. Sun. Deep residual learning for image recognition. In *CVPR*, pages 770–778, 2016.

[2] K. He, X. Zhang, S. Ren, and J. Sun. Delving deep into rectifiers: Surpassing human-level performance on ImageNet classification. In *ICCV*, pages 1026–1034, 2015.

[3] J. Hu, L. Shen, and G. Sun. Squeeze-and-excitation networks. In *CVPR*, pages 7132–7141, 2018.

[4] S. Ioffe and C. Szegedy. Batch normalization: Accelerating deep network training by reducing internal covariate shift. In *ICML*, pages 448–456, 2015.

[5] C.-Y. Lee, S. Xie, P. Gallagher, Z. Zhang, and Z. Tu. Deeply-supervised nets. In *AISTATS*, pages 562–570, 2015.

[6] T.-Y. Lin, P. Goyal, R. Girshick, K. He, and P. Dollár. Focal loss for dense object detection. In *ICCV*, pages 2980–2988, 2017.

[7] I. Loshchilov and F. Hutter. Decoupled weight decay regularization. In *ICLR*, 2019.

[8] O. Oktay et al. Attention U-Net: Learning where to look for the pancreas. *arXiv:1804.03999*, 2018.

[9] O. Ronneberger, P. Fischer, and T. Brox. U-Net: Convolutional networks for biomedical image segmentation. In *MICCAI*, pages 234–241. Springer, 2015.

[10] N. Srivastava, G. Hinton, A. Krizhevsky, I. Sutskever, and R. Salakhutdinov. Dropout: A simple way to prevent neural networks from overfitting. *JMLR*, 15(1):1929–1958, 2014.

[11] C. Szegedy, V. Vanhoucke, S. Ioffe, J. Shlens, and Z. Wojna. Rethinking the inception architecture for computer vision. In *CVPR*, pages 2818–2826, 2016.

[12] H. Zhang, M. Cisse, Y. N. Dauphin, and D. Lopez-Paz. mixup: Beyond empirical risk minimization. In *ICLR*, 2018.