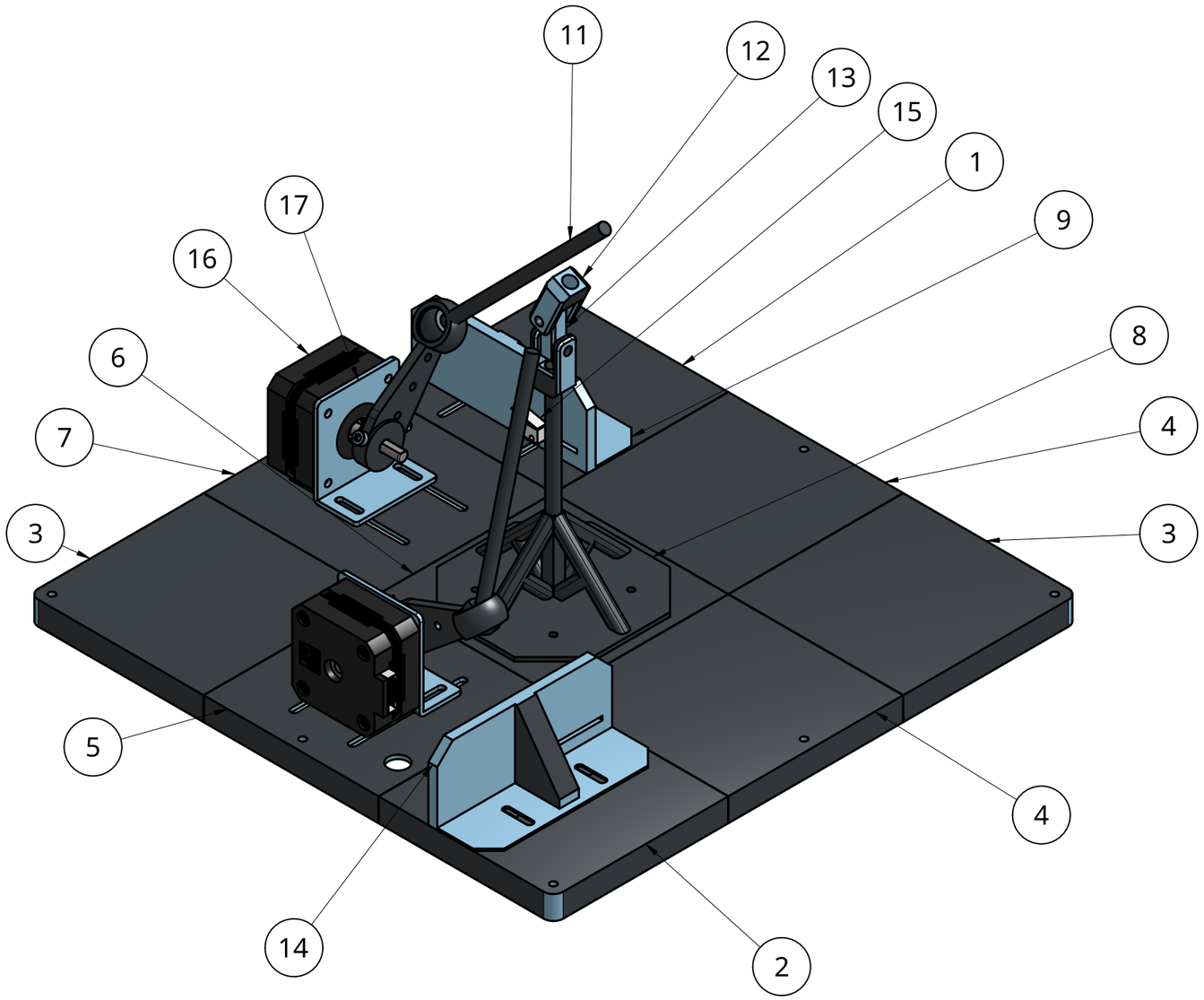

Item	Quantity	Description	Vendor
1	1	base top corner q1	3D printed
2	1	base top corner q3	3D printed
3	2	base top corners q2 and q4	3D printed
4	2	base top middle q1-q4 and q3-q4	3D printed
5	1	base top middle q2-q3	3D printed
6	1	base top center	3D printed
7	1	base top middle q1-q2	3D printed
8	1	base top plate stand	3D printed
9	1	limit switch mount q1	3D printed
10	2	motor horn	3D printed
11	2	push rod	3D printed
12	2	biaxial joint	3D printed
13	1	biaxial junction joint	3D printed
14	1	limit switch mount q3	3D printed
15	2	limit switch	bought out
16	2	nema stepper motor	bought out
17	2	sheet metal motor mount	bought out

UNLESS OTHERWISE SPECIFIED, DIMENSIONS ARE IN MILLIMETERS

ANGULAR = ± °

SURFACE FINISH

DO NOT SCALE DRAWING

BREAK ALL SHARP EDGES AND REMOVE BURRS

FIRST ANGLE PROJECTION

	NAME	SIGNATURE	DATE
DRAWN	A VALENTINI		2024-01-21
CHECKED			
APPROVED			

MATERIAL

FINISH

TITLE

Base Top Assembly

SIZE A3

DWG NO.

REV.

SCALE 1:2

WEIGHT

SHEET 1 of 1